Issue Date:

10/7/2024

Project:

23-1025

N GAREY AVE

SOUTHLAND DEVELOPMENT CO. INC.

7/16/2025 11:42:06 AM

1377 N GAREY AVE

Original Issuance:

BUILDING CONSTRUCTION

CONSTRUCTION TYPE: TYPE V-A
BUILDING HEIGHT (TABLE 504.3): ALLOWED: 3 STORIES. PROPOSED: 4 STORIES
SPRINKLERED: YES
SPRINKLERS USED TO INCREASE STORIES (504.3): YES
BASEMENT: NO
MAXIMUM ALLOWABLE # OF STORIES PER CBC TABLE 504.4
(R2, TYPE V-A, SPRINKLERED): 4 STORIES
PROPOSED MAX # OF STORIES: 4
MAXIMUM COMMON PATH OF EGREES PER CBC TABLE 1006.2.1
(R2, SPRINKLERED) 125', (A, SPRINKLERED) 100', (S2, SPRINKLERED) 100'
EXIT ACCESS TRAVEL DISTANCE PER CBC TABLE 1017.2
(R2, SPRINKLERED) 250', (A, SPRINKLERED) 300', (S2, SPRINKLERED) 400'

FIRE RESISTIVE REQUIREMENTS: Type VA (Table 602.1)		Rating Required:	Rating Provided:	Tested Assembly Number:
Structural Frame:	Load-Bearing Wood Frame	1 Hrs	1 Hrs	-
Bearing Walls - Exterior	Load-Bearing Wood Frame	1 Hrs	1 Hrs	Ref. A700
Bearing Walls - Interior	Non-Bearing Wood Frame	1 Hrs	1 Hrs	Not Req.
Floor	TJI Joist-Framed Floor	1 Hrs	1 Hrs	Ref. A702
Roof	TJI Joist-Framed Floor	1 Hrs	1 Hrs	Not Req.

BUILDING AREAS TYPE VA

Allowable Area (506.2) & Area Modifications: (see A100.4)		**Occ: R-2** VA CONSTR.	**Occ: B** IA CONSTR.	**Occ: S-2** IA CONSTR.
Tabular Floor Area for Each Occ. (Table 506.2):		36,000 SF	UL	UL
Total Allowable Building Area per Story:		36,000 SF	UL	UL
Proposed Areas per Story:		Allowable:	Allowable:	Allowable:
First Floor:	6,716 SF	-	UL	UL
Second Floor:	6,297 SF	36,000 SF		
Third Floor:	6,314 SF	36,000 SF		
Fourth Floor:	5,982 SF	36,000 SF		
TOTAL:	25,309 SF	36,000 SF		

BUILDING FIRE DETECTION & SUPPRESSION

Provided: Yes	**Type / Class**	**Required or Optional**	**Areas of Coverage:**
Sprinkler System:	NFPA 13	Required, 903.2	100%
Fire Alarm System:	NFPA 72	Required, 907.2.13	100%
Standpipe System:	NFPA 14	Required, 905.3	100%
Smoke Detection System:	NFPA 13	Required, 907.2.13.1	100%

Notes & Provisions:

1. SPRINKLER & ALARM SYSTEMS TO BE AN APPROVE SUPERVISING STATION IN ACCORDANCE WITH NFPA 72
2. SEPARATE PERMIT & APPROVAL REQUIRED BY FIRE MARSHAL FOR SPRINKLER SYSTEM ALTERATIONS.
3. PROVIDE TWO WAY COMMUNICATION SYSTEM AT ELEVATOR LOBBIES, CONNECTED TO AND MONITORED W/ BUILDING ALARM SYSTEM.
4. AFTER SPRINKLER BRANCH PIPING AS REQUIRED TO MAINTAIN 100% COVERAGE WITH NEW INTERIOR PARTITION LAYOUTS.

GENERAL

JURISTICTIONAL AUTHORITY: CITY OF POMONA

APPLICABLE CODES:
- 2022 CALIFORNIA BUILDING CODE
- 2022 CALIFORNIA FIRE CODE
- 2022 CALIFORNIA ELECTRICAL CODE
- 2022 CALIFORNIA MECHANICAL CODE
- 2022 CALIFORNIA PLUMBING CODE
- TITLE 24 CALIFORNIA ENERGY CODE
- LOCAL MUNICIPAL CODE
- 2022 CALIFORNIA GREEN CODE

DEFERRED SUBMITTAL ITEMS (BY SEPARATE PERMIT):

ALL DEFERRED SUBMITTAL ITEMS ARE REQUIRED TO BE SUBMITTED WITHIN 60 DAYS PRIOR TO INSTALLATION

1. ELEVATOR
2. EMERGENCY RESPONDER RADIO COVERAGE
3. FIRE ALARM SYSTERM & MONITORING
4. SOLAR PHOTOVOLTAIC SYSTEM
5. SIGNAGE
6. AUTOMATIC SPRINKLER SYSTEM NFPA-13

SCOPE OF WORK

PROPOSAL IS FOR THE CONSTRUCTION OF NEW, 25,309 SF, TYPE VB 100% AFFORDABLE HOUSING PROJECT WITH A TOTAL OF 35 APARTMENT UNITS. UNITS WILL INCLUDE 17 ONE BEDROOM UNITS 458 SF EA AND 18 TWO BEDROOMUNITS 568 SF EACH ALL MEETING THE STATE DEFINITION OF "LOW INCOME". 4 CONCESSIONS REQUESTED (4 ALLOWED) FOR 1) REDUCTION IN MINIMUM UNIT SIZE 2) COMMON AREA DEFINITION CHANGE FOR "PUBLIC SPACE" 3) SIDEYARD SETBACK REDUCED TO 5' AND 4) PARKING REDUCTION. WAIVERS REQUESTED FOR BUILDING HEIGHT INCREASE TO 60' AND BUILDING MASSING REQUIREMENTS. A TOTAL OF 19 AUTOMOTIVE PARKING SPACES INCLUDING TWO ADA COMPLIANT AND ONE EV CHARGING STATION AND 14 BIKE / SCOOTER PARKING.

OVERVIEW

1377 N. GAREY AVE. POMONA CA 91767

APN: 8339-027-015 & 8339-027-016
Lot: 17 & 18 **BLOCK:** "B"
ZONING: DOWNTOWN GATEWAY SEGMENT (T4) COORIDOR SPECIFIC PLAN FOR GAREY AVE NEIGHBORHOOD DISTRICT EDGE
RESIDENTIAL ZONE: R-4
DISTRICT: DISTRICT 1
CONSTRUCTION TYPE: V-A
OCCUPANCY: R2
LOT AREA: 20,424 SF
FIRE SPRINKERS: YES

HEIGHT LIMIT:
MAX ALLOWABLE HT: 3 STORIES (6 IN OVERLAY)
MAX HT WAIVER REQUETED: 3 STORIES ALLOWED, 4 STORIES PROPOSED
PROVIDED MAX HT: 60'-0"
MAX ALLOWABLE BUILDING LENGTH 80', 68'-0" BUILDING LENGTH COMPLIES
EQUIPMENT MIN.: 10'-0" FROM EDGE OF ROOF
MASS 3L : 2H, 5L : 2H

MIN. UNIT SIZE: DEV. PLAN REVIEW HEARING REQUIRED:
DOWNTOWN GATEWAY SEGMENT BLUE
MF ALLOWED: MIN. 600 SF ONE BED (CONCESSION REQUESTED)
800 SF TWO BED (CONCESSION REQUESTED)
1000 SF THREE BED (N/A)

NUMBER. OF UNIT:
PROPOSED UNITS: 35
LOW INCOME: 100% = 35

TOTAL ALLOWABLE UNITS BY RIGHT: 19 DU (42 DU PER AC)
AFFORDABLE HOUSING UNIT INCREASE (PER DENSITY BONUS CHART): 80% = 35 DU ALLOWABLE
PROPOSED: **35 AFFORDABLE DU**

SETBACKS:
REQ.D. SIDE YARD : **10'-0" REQ'D.** (WITH DU WINDOWS)
PROVIDED SY: **5'-0"** - (CONCESSION REQUESTED)
REQ.D. FRONT YARD : **5'-0" / 15'-0"**
PROVIDED FY: **5'-0", 5'-2", 11'-9"**
REQ.D. REAR YARD : **10'-0"**
PROVIDED RY: **48'-0"**
COMMON LOBBY: MIN. **5'-0"** SETBACK FROM FACADE
PROVIDED LOBBY: **6'-9"** SEBACK FROM FACADE

PRIVATE OPEN SPACE / PUBLIC OPEN SPACE

PRIVATE OPEN AREA REQUIRED: (60 SQ. FT. PER UNIT)
35 x 60 = 2,100 SQ. FT.
PRIVATE OPEN AREA PROVIDED:
2,170 SQ. FT.

PUBLIC OPEN AREA REQUIRED: (15% OF LOT AREA)
LOT AREA 20,424 x 15 = 3,064 SQ. FT.
PUBLIC OPEN AREA PROVIDED:
3,229 SQ. FT.

PARKING

PARKING REQUIRED:
1 PK PER STUDIO
1.2 PK PER 1 BED
2 PK PER 2 BED
3+ PER BED = .5
1 GUEST PK PER 4
PARKING MIN. 5'-0" FROM SIDEWALK
1 TREE PER 5 PARKING (ISLAND)

PARKING PROVIDED:
19 PK, (2 ADA STALL, AND 1 EV)

BICYCLE PARKING:
LONG TERM BICYCLE PARKING PROVIDED = 8
SHORT TERM BICYCLE PARKING PROVIDED = 6

SHEET INDEX

NUMBER	SHEET	ISSUE DATE
GENERAL		
000	COVER	06/20/2024
001	PROJECT DATA	06/20/2024
002	PROJECT DATA	06/20/2024
003	RENDERINGS	06/20/2024
050	SITE SURVEY	06/20/2024
051	SITEPLAN DEMOLITION	06/20/2024
052	LANDSCAPE PLAN	06/20/2024
053	GRADING SITEPLAN	06/20/2024
054	FENCE ELEVATIONS	06/20/2024
055	BUILDING AREA	06/20/2024
056	SITE PLAN - RADIUS MAP	11/06/2024
ARCHITECTURAL		
A100.1	SITE PLAN	06/20/2024
A100.2	ENLARGED PLAN - SERVICE EASEMENT	01/23/25
A100.3	AREA	07/15/25
A101	FLOOR PLAN - LEVEL 01	06/20/2024
A102	FLOOR PLAN - LEVEL 02	06/20/2024
A103	FLOOR PLAN - LEVEL 03	06/20/2024
A104	FLOOR PLAN - LEVEL 04	06/20/2024
A105	ROOF ACCESS PLAN	06/20/2024
A106	ROOF PLAN	06/20/2024
A107	LIGHTING PLAN	06/20/2024
A201	EXTERIOR ELEVATIONS	06/20/2024
A202	EXTERIOR ELEVATIONS	06/20/2024
A203	BUILDING MASSING	06/20/2024
A300	FULL BUILDING SECTIONS	06/20/2024
A400	ENLARGED PLANS	06/20/2024
A401	ENLARGED PLANS	06/20/2024
A501	ACCESSIBLE ELEVATOR DETAIL	11/06/2024
A700	EXTERIOR WALL SYSTEMS	11/06/2024
A701	INTERIOR WALL SYSTEMS	11/06/2024
A800	DOOR SCHEDULE	11/06/2024
A802	WINDOW SCHEDULE	06/20/2024
A900	LIGHTING SPECS	06/20/2024
A901	RAILING	06/20/2024

www.ULTRA-UNIT.com

Architect:
Ultra-Unit Architectural Studio
1327 Loma Avenue
Long Beach, California 90804
e. cameron@ultra-unit.com

Structural Engineer:
David Choi & Associates
1327 Loma Avenue
Long Beach, California 90804
e. david@dca-se.com

Owner:
Sarah Johnson
1377 N Garey Ave, LP
3982 S Figueroa St, Suite 209
Los Angeles CA, 90037
development@pathway2tomorrow.org

Architect Stamp

LICENSED ARCHITECT
CAMERON CROCKETT
C31503
1.31.2025
RENEWAL DATE
STATE OF CALIFORNIA

Date 10/7/2024

Project:
N GAREY AVE
1377 N GAREY AVE
POMONA, CA

Client Name: SOUTHLAND DEVELOPMENT CO. INC.

Revisions

Sheet Name: COVER

Sheet Number: 000

Project Number	23-1025
Drawn By	GG
Checked By	CC
Scale	As indicated

C:\Users\User\Desktop\1377 N Garey Ave _ R24_DL_cams.rvt
7/16/2025 11:42:06 AM

GENERAL NOTES

1. CODES: ALL WORK PERFORMED SHALL CONFORM TO THE APPLICABLE LAWS INCLUDING BUT NOT LIMITED TO THE LATEST ADOPTED EDITIONS OF:

1. 2022 CBC CALIFORNIA BUILDING CODE
2. 2022 CFC CALIFORNIA FIRE CODE
3. 2022 CEC CALIFORNIA ELECTRICAL CODE
4. 2022 CMC CALIFORNIA MECHANICAL CODE
5. 2022 CPC CALIFORNIA PLUMBING CODE
6. TITLE 24 CALIFORNIA CODE OF REGULATIONS
7. 2022 LONG BEACH MUNICIPAL CODE.

2. DOCUMENTS & NOTIFY ARCHITECT PROMPTLY & BEFORE COMMENCING WORK IF KNOWN, OF ERRORS, OMISSIONS, & DISCREPANCIES: CONTRACTORS SHALL REVIEW CONSTRUCTION ANY ERRORS, OMISSIONS, DISCREPANCIES IN THESE CONSTRUCTION DOCUMENTS, OR OF ADVERSE JOB CONDITIONS. THE GENERAL CONTRACTOR IS RESPONSIBLE FOR THE RESULTS OF SUCH ERRORS, OMISSIONS, DISCREPANCIES OR CONDITIONS NOT REPORTED IN WRITING TO THE ARCHITECT.

3. ORGANIZATION: DO NOT CONSTRUE THESE DOCUMENTS AS AN ATTEMPT BY THE ARCHITECT TO ESTABLISH CONTRACT LIMITS BETWEEN THE OWNER & THE CONTRACTORS.

4. ESTABLISH CONTRACT LIMITS BETWEEN THE OWNER & THE CONTRACTORS. PRACTICES OF THE TRADE.
   A.THE GENERAL CONTRACTOR SHALL BE RESPONSIBLE FOR COORDINATING THE WORK OF ALL TRADE.
   B. THE TERM "CONTRACTOR" AS USED HEREIN & ON THE DRAWINGS SHALL ALSO BE APPLICABLE TO EACH SUBCONTRACTOR AS REQUIREMENTS PERTAIN TO HIS TRADE.

5. BEFORE COMMENCING WORK, EACH SUBCONTRACTOR SHALL VERIFY MEASUREMENTS, LINES, GRADES, LOCATIONS, & DETAILS OF EXISTING FIELD CONDITIONS & NOTIFY THE CONTRACTOR OF ANY DISCREPANCIES. STARTING OF WORK BY A SUBCONTRACTOR DENOTES THAT THE UNDERSURFACE HAS BEEN INSPECTED & IS APPROVED BY THE SUBCONTRACTOR.

6. CONTRACTORS SHALL ADEQUATELY PROTECT ALL PUBLIC & PRIVATE PROPERTY & IMPROVEMENTS FROM DAMAGE OR INJURY. DAMAGED AREAS SHALL BE REPLACED IN GOOD CONDITION @ NO ADDITIONAL COST TO THE OWNER.

7. THE CONTRACTORS SHALL REPLACE ANY DEFECTIVE MATERIALS & CORRECT ANY POOR WORKMANSHIP WITH NO ADDITIONAL COST TO THE OWNER, & SHALL REMEDY ANY DEFECTS IN MATERIALS OR WORKMANSHIP WHICH APPEAR WITHIN A TWO YEAR PERIOD FROM THE DATE OF COMPLETION & ACCEPTANCE OF THE JOB.

8. THE CONTRACTORS SHALL SUPPLY ALL LABOR, MATERIALS, EQUIPMENT INSURANCE & SERVICES OF EVERY KIND NECESSARY FOR THE PROPER EXECUTION OF ALL WORK AS SHOWN, & INDICATED ON THESE DRAWINGS.

9. PERMITS: THE GENERAL CONTRACTOR IS RESPONSIBLE FOR OBTAINING THE BUILDING PERMIT. IF ANY SPECIAL PERMITS ARE REQUIRED FOR SUB TRADES, THE APPROPRIATE SUBCONTRACTOR SHALL OBTAIN THEM. THE OWNER WILL REIMBURSE ALL PERMITS. CONTRACTORS SHALL PAY ALL LICENSES & ROYALTIES & SHALL DEFEND ALL SUITES OR CLAIMS FOR INFRINGEMENT OF ANY PATENT RIGHTS & SHALL HOLD THE OWNER HARMLESS FROM LOSS ON ACCOUNT THERE OF.

10. COORDINATION: THE GENERAL CONTRACTOR IS RESPONSIBLE FOR SETTING UP A TIME SCHEDULE FOR ALL SUBCONTRACTORS & COORDINATING THEIR WORK IN A TIMELY MANNER. ALL WORKMANSHIP, SCHEDULING & PHASING SHALL CONFORM TO THE REQUIREMENTS OF THE BUILDING OWNER.

11. THE GENERAL CONTRACTOR SHALL BE RESPONSIBLE FOR MAINTAINING SAFE JOB SITE CONDITIONS. SUBCONTRACTORS SHALL BE RESPONSIBLE TO CLEANUP THE AREAS OF THEIR WORK @ THE END OF EACH DAY. AT THE END OF THE JOB, THE GENERAL CONTRACTOR SHALL ENSURE THAT ALL FINISHES ARE CLEAN AND FREE OF DEFECTS. ANY BROKEN, DAMAGED OR SUB-STANDARD MATERIALS OR FINISHES SHALL BE REPLACED BY THE GENERAL CONTRACTOR AT NO ADDITIONAL COSTS TO THE OWNER.

12. INSPECTIONS: THE GENERAL CONTRACTOR IS RESPONSIBLE FOR ARRANGING ALL NECESSARY PRIOR TO INSPECTIONS. INSPECTIONS FOR ALL SUBCONTRACTORS WORK. THE CONTRACTOR SHALL NOTIFY THE ARCHITECT 24 HOURS

13. DO NOT SCALE DRAWINGS. DIMENSIONS SHALL TAKE PRECEDENCE OVER SCALE. DETAIL DRAWINGS SHALL TAKE PRECEDENCE OVER LARGER DRAWINGS.

14. THE OUTLINE SPECIFICATIONS ARE DIVIDED BY THE ARCHITECT FOR CONVENIENCE ONLY. IT IS THE RESPONSIBILITY OF THE GENERAL CONTRACTOR TO DETERMINE WHAT TRADE IS RESPONSIBLE FOR EACH ITEM, & TO COMPLETE THE JOB IN ITS ENTIRETY. THE FOLLOWING OUTLINE SPECIFICATIONS INCLUDE ONLY MAJOR INFORMATION. IN THE ABSENCE OF MORE DETAILED SPECIFICATIONS, ALL MATERIALS & EQUIPMENT SHALL BE APPROVED BY THE ARCHITECT.

15. ALL MATERIALS SHALL BE NEW MATERIALS & OF THE HIGHEST QUALITY & ALL SUBSTITUTIONS SHALL BE SUBMITTED FOR APPROVAL BY THE CONTRACTOR TO THE OWNER AND ARCHITECT PRIOR TO SIGNING THE CONSTRUCTION CONTRACT. MATERIAL & PRODUCTS SHALL BE DELIVERED TO THE BUILDING SITE IN ORIGINAL PACKAGES. MATERIALS & PRODUCTS SHALL BE STORED OFF THE GROUND ON WOOD BLOCKING IN AN UPRIGHT POSITION PROTECTED FROM THE ELEMENTS & IN A MANNER TO PREVENT MARRING OF FINISHES.

16. CHANGES: THE OWNER RESERVES THE RIGHT TO MAKE CHANGES, ADDITIONS, OR OMISSIONS IN THE PLANS & SPECIFICATIONS. THE COST OF SUCH WORK TO BE ADDED TO OR DEDUCTED FROM THE CONTRACT AS APPROVED CHANGE ORDERS. CHANGE ORDERS MUST BE SIGNED BY THE OWNER, ARCHITECT & CONTRACTOR, PRIOR TO THE CHANGE IN WORK. IN CASE OF INCREASE, ADDITIONAL OVERHEAD & PROFIT WILL BE ALLOWED PER CONTRACT. ARCHITECT SHALL APPROVE ALL CHANGES IN WRITING PRIOR TO EXECUTION OF ANY CHANGE.

17. FRAMING CONDITIONS NOT SPECIFICALLY SHOWN SHALL BE FRAMED SIMILAR TO TYPICAL DETAILS SHOWN FOR PROSPECTIVE MATERIALS & SIMILAR CONDITIONS.

18. CONTRACTOR TO VERIFY WITH ELECTRICAL, MECHANICAL & PLUMBING SUBCONTRACTORS, THE SIZE & LOCATION OF ALL OPENINGS REQUIRED FOR ALL PIPE SLEEVES, ELECTRICAL CONDUITS, WATER & DRAINAGE PIPING & OTHER ITEMS TO BE EMBEDDED IN CONCRETE OR OTHERWISE INCORPORATED IN STRUCTURAL WORK.

19. FRAMING SUB-CONTRACTOR SHALL PROVIDE & INSTALL ANY NECESSARY BLOCKING, BACKING, FURRING, & ITEMS REQUIRING SAME. FRAMING FOR ELECTRICAL, MECHANICAL & PLUMBING WORK, CABINETS, FIXTURES, & OTHER MISCELLANEOUS

20. ALL MATERIALS AND FINISHES SHALL BE INSTALLED IN STRICT CONFORMANCE WITH THE APPLICABLE BUILDING CODES, MANUFACTURER 'S SPECIFICATIONS AND TO THE COMPLETE SATISFACTION OF THE ARCHITECT AND THE OWNER.

21. THE CONTRACT DRAWINGS & SPECIFICATIONS REPRESENT THE FINISHED STRUCTURE. UNLESS OTHERWISE SHOWN, THEY DO NOT INDICATE THE METHOD OF CONSTRUCTION. THE GENERAL CONTRACTOR SHALL SUPERVISE & DIRECT THE WORK & SHALL BE SOLELY RESPONSIBLE FOR ALL CONSTRUCTION MEANS, METHODS, TECHNIQUES, SEQUENCES & PROCEDURES. OBSERVATION VISITS TO THE SITE BY FIELD REPRESENTATIVES OF THE ARCHITECT SHALL NOT INCLUDE INSPECTIONS OF THE PROTECTIVE MEASURES OR THE CONSTRUCTION PROCEDURES REQUIRED FOR SAME, WHICH ARE THE SOLE RESPONSIBILITY OF THE CONTRACTOR. OBSERVATIONS BY THE ARCHITECT DO NOT GUARANTEE THE GENERAL CONTRACTOR 'S PERFORMANCE & SHALL NOT BE CONSTRUED AS SUPERVISION OF CONSTRUCTION.

ABBREVIATION

AC	ASPHALT CONCRETE
BLDG	BUILDING
BM	BENCHMARK
CB	CATCH BASIN
CI	CAST IRON
COLB	CITY OF LONG BEACH
CONC	CONCRETE
CLR	CLEAR
D	DIAMETER, DEPTH
DI	DUCTILE IRON
DG	DECOMPOSED GRANITE
EL OR ELEV	ELEVATIONS
ENG	ENGINEERED
(E) OR EXIST	EXISTING
FD	FLOOR DRAIN
FF	FINISH FLOOR
FG	FINISH GRADE
FH	FIRE HYDRANT
FL	FLOW LINE
FS	FLOOR SINK
GB	GRADE BREAK
GV	GATE VALVE
HP	HIGH POINT
ICV	IRRIGATION CONTROL VALVE
INV	INVERT
IRRIG	IRRIGATION
LBWD	LONG BEACH WATER DEPT.
LP	LOW POINT
MAX	MAXIMUM
MH	MANHOLE
MIN	MINIMUM
MISC	MISCELLANEOUS
(N)	NEW
NTS	NOT TO SCALE
OC	ON CENTER
POC	POINT OF CONNECTION
PROP	PROPOSED
PVC	POLYVINYL CHLORIDE
R	RADIUS
REF	REFERENCE
RET	RETAINING
S	SLOPE
SD	STORM DRAIN
SMH	SEWER MANHOLE
SPPWC	STANDARD PLANS FOR PUBLIC WORKS CONSTRUCTION
SSPWC	STANDARD SPECIFICATIONS FOR PUBLIC WORKS
STD	STANDARD
STRG	STORAGE
TC	TOP OF CURB
TP	TOP OF PLATE
TESC	TEMPORARY EROSION AND SEDIMENT CONTROL
VCP	VITRIFIED CLAY PIPE
W	WATER
VIF	VERIFY IN FIELD

ARCHITECTURAL SYMBOLS LEGEND

BUILDING SECTION REFERENCE — # X-###
WALL SECTION REFERENCE — # X-###
DETAIL ELEVATION REFERENCE — # X-###
INTERIOR ELEVATION REFERENCE — # X-### #
EXTERIOR ELEVATION REFERENCE — # X-### #
DETAIL CALLOUT — 1 A101 SIM
DIMENSION LINE — 8' - 2"
CENTERLINE — ℄
GRID LINE — 0
ELEVATION LABEL
INTERIOR PARTITION TYPE TAG — EXT28
WINDOW TAG — ##
SPOT ELEVATION — 100'-0"
DOOR TAG — D101
ROOM TAG — ROOM NAME ####
AREA TAG — AREA NAME 150 SF
FINISH TAG — ROOM NAME 101 F-1/C-1 W-A
VIEW REFERENCE — # / X-###
KEYNOTE AND LEADER-TYPE 1 — ? ?
KEYNOTE AND LEADER-TYPE 2 — 07 2700 - SHEET WATERPROOFING
REVISION CLOUD AND TAG — 1
NORTH ARROW — N
GRAPHIC SCALE — 0' 2' 4' 8' 16'

SCALE: 1/4" = 1'-0"

GRADE ELEVATION CALCULATIONS
MEASURING 5'X5' SQUARE FROM EXTERIOR FACE OF BUILDING TO SURFACE OF GROUND: 708.5'

BMP's

"AS THE ARCHITECT/ENGINEER OF RECORD, I HAVE SELECTED APPROPRIATE BMPS TO EFFECTIVELY MINIMIZE THE NEGATIVE IMPACTS OF THIS PROJECT'S CONSTRUCTION ACTIVITIES ON STORM WATER QUALITY. THE PROJECT OWNER AND CONTRACTOR ARE AWARE THAT THE SELECTED BMP'S MUST BE INSTALLED, MONITORED, AND MAINTAINED TO ENSURE THEIR EFFECTIVENESS. THE BMP'S NOT SELECTED FOR IMPLEMENTATION ARE REDUNDANT OR DEEMED NOT APPLICABLE TO THE PROPOSED CONSTRUCTION ACTIVITIES."

NAME POSITION DATE

"I CERTIFY THAT THE PROPOSED WORK WILL NOT DESTROY OR UNREASONABLY INTERFERE WITH ANY ACCESS OR UTILITY EASEMENT BELONGING TO OTHERS AND LOCATED WITHIN MY PROPERTY. HOWEVER, IN THE EVENT SUCH WORK DOES DESTROY OR UNREASONABLY INTERFERE WITH SUCH EASEMENT(S), A SUBSITUTE EASEMENT(S) SATISFACTORY TO THE HOLDER(S) OF THE EASEMENT WILL BE PROVIDED"

SIGNATURE POSITION

PRINT NAME DATE

NEW AND EXISTING BUILDINGS SHALL HAVE APPROVED ADDRESS NUMBERS, BUILDING NUMBERS OR APPROVED BUILDING IDENTIFICATION PLACED IN A POSITION THAT IS PLAINLY LEGIBLE AND VISIBLE FROM THE STREET OR ROAD FRONTING THE PROPERTY, CONTRASTING WITH THEIR BACKGROUND. NUMBERS SHALL BE A MINIMUM OF 5 INCHES. WHERE ACCESS IS BY MEANS OF A PRIVATE ROAD AND THE BUILDING CANNOT BE VIEWED FROM THE PUBLIC WAY, A MONUMENT, POLE OR OTHER SIGN OR MEANS SHALL BE USED TO IDENTIFY THE STRUCTURE. (CFC 505.1)

I CERTIFY THAT THE PRIMARY PATH OF TRAVEL TO THE SPECIFIC AREA OF ALTERATION, STRUCTURAL REPAIR OR ADDITION FROM THE PUBLIC WAY OR ACCESSIBLE PARKING SPACE AS INDICATED ON THE PLANS DOES NOT INCLUDE STEPS OR A SLOPE EXCEEDING 1:20 EXCEPT WHERE ACCESS IS PROVIDED BY A RAMP WITH 1:12 MAXIMUM SLOPE, ACCESSIBLE ELEVATOR OR OTHERWISE GRANTED BY AN UNREASONABLE HARDSHIP EXEMPTION. I UNDERSTAND THAT IF THE PRIMARY PATH OF TRAVEL IS FOUND NOT TO BE INDICATED, SIGNIFICANT DELAYS MAY RESULT.

FURTHERMORE, I CERTIFY THAT THESE PLANS WERE PREPARED UNDER MY DIRECT SUPERVISION AND THAT THE AREA OF SPECIFIC ALTERATION, STRUCTURAL REPAIR, OR ADDITION INCLUDING A PRIMARY ENTRANCE TO THE EXISTING BUILDING AND, WHEN APPLICABLE, SANITATION FACILITIES, DRINKING FOUNTAINS, SIGNS AND PUBLIC TELEPHONES SERVING AREAS COMPLIES WITH CURRENT CA TITLE 24 ACCESSIBILITY REQUIREMENTS.

SIGNATURE TITLE

PRINT NAME

PLANNING NOTES

1. THE CONSTRUCTION SHALL NOT RESTRICT A FIVE-FOOT CLEAR AND UNOBSTRUCTED ACCESS TO ANY WATER OF POWER DISTRIBUTION FACILITIES (POWER POLES, PULL BOXES, TRANSFORMERS, VAULTS, PUMPS, VALVES, METERS, APPURTENANCES, ETC.) OR TO THE LOCATION OF THE HOOK-UP. THE CONSTRUCTION SHALL NOT BE WITHIN TEN FEET OF ANY POWER LINES- WHETHER OR NOT THE LINES ARE LOCATED ON THE PROPERTY. FAILURE TO COMPLY MAY CAUSE CONSTRUCTION DELAYS AND/OR ADDITIONAL EXPENSES.
2. AN APPROVED SEISMIC GAS SHUTOFF VALVE WILL BE INSTALLED ON THE FUEL GAS LINE ON THE DOWNSTREAM SIDE OF THE UTILITY METER AND BE RIGIDLY CONNECTED TO THE EXTERIOR OF THE BUILDING OR STRUCTURE CONTAINING THE FUEL GAS PIPING. NOTE SEPARATE PLUMBING PERMIT IS REQUIRED.
3. PROVIDE ULTRA-LOW FLUSH WATER CLOSETS FOR ALL NEW CONSTRUCTION. EXISTING SHOWER HEADS AND TOILETS MUST BE ADAPTED FOR LOW WATER CONSUMPTION.
4. SHOWER COMPARTMENTS AND WALLS ABOVE BATHTUBS WITH INSTALLED SHOWER HEADS SHALL BE FINISHED WITH A SMOOTH NON-ABSORBENT SURFACE TO HEIGHT NO LESS THAN 72 INCHES ABOVE THE DRAIN INLET.
5. WATER HEATERS MUST BE STRAPPED TO A WALL.
6. EVERY SPACE INTENDED FOR HUMAN OCCUPANCY SHALL BE PROVIDED WITH NATURAL LIGHT BY MEANS OF EXTERIOR GLAZED OPENINGS IN ACCORDANCE WITH SECTION 1205.2 OR SHALL BE PROVIDED WITH ARTIFICIAL LIGHT THAT IS ADEQUATE TO PROVIDE AN AVERAGE ILLUMINATION OF 10 FOOT-CANDLES OVER THE AREA OF THE ROOM AT A HEIGHT OF 30 INCHES ABOVE THE FLOOR LEVEL. (1205.1 AND 1205.3)
7. DOUBLE STRIPING OF STALLS SHALL BE PER ZONING CODE SECTION 12.21A5 CHART NO. 5
8. EVERY SPACE INTENDED FOR HUMAN OCCUPANCY SHALL BE PROVIDED WITH NATURAL LIGHT BY MEANS OF EXTERIOR GLAZED OPENINGS IN ACCORDANCE WITH SECTION 1205.2 OR SHALL BE PROVIDED WITH ARTIFICIAL LIGHT THAT IS ADEQUATE TO PROVIDE AN AVERAGE ILLUMINATION OF 10 FOOT-CANDLES OVER THE AREA OF THE ROOM AT A HEIGHT OF 30 INCHES ABOVE THE FLOOR LEVEL.
9. ALL LIGHTS USED TO ILLUMINATE A PARKING AREA SHALL BE DESIGNED, LOCATED AND ARRANGED SO AS TO REFLECT THE LIGHT AWAY FROM ANY STREET AND ANY ADJACENT PREMISES
10. ALL PARKING AREAS AND GARAGES PROVIDED FOR THREE OR MORE DWELLING UNITS OR GUEST ROOMS SHALL HAVE AN AVERAGE SURFACE ILLUMINATION OF NOT LESS THAN 0.2 FOOT-CANDLES.
11. A DISHWASHER THAT MEETS OR EXCEEDS THE ENERGY STAR(R) PROGRAM REQUIREMENTS AND A REFRIGERATOR THAT MEETS OR EXCEEDS THE ENERGY STAR PROGRAM REQUIREMENTS MUST BE INSTALLED.
12. A COPY OF THE EVALUATION REPORT AND OR CONDITIONS OF LISTING SHALL BE MADE AVAILABLE AT THE JOB SITE.
13. ALL GRADING SLOPES SHALL BE PLANTED AND SPRINKLERED
14. STANDARD 12" HIGH BERM IS REQUIRED AT TOP OR ALL GRADED SLOPES
15. NO FILL TO BE PLACED, UNTIL THE CITY GRADING INSPECTOR HAS INSPECTED AND APPROVED THE BOTTOM EXCAVATION
16. MAN MADE FILL SHALL BE COMPACTED TO A MINIMUM RELATIVE COMPACTION OF 90% MAX. DRY DENSITY WITHIN 40' BELOW FINISH GRADE AND 93% OF MAX DRY DENSITY DEEPER THAN 40' BELOW FINISH GRADE UNLESS A LOWER RELATIVE COMPACTION NOT LESS THAN 90% MAX DRY DENSITY IS JUSTIFIED BY THE SOILS ENGINEER.
17. TEMPORARY EROSION CONTROL TO BE INSTALLED BETWEEN OCTOBER 1 AND APRIL 15. OBTAIN GRADING INSPECTORS AND DEPARTMENT OF PUBLIC WORKS APPROVAL AND PROPOSED PROCEDURES.
18.METAL ADDRESS NUMBERS: APPROVED BUILDING ADDRESS NUMBERS, BUILDING NUMBERS OR APPROVED BUILDING IDENTIFICATION SHALL BE PROVIDED AND MAINTAINED SO AS TO BE PLAINLY VISIBLE AND LEGIBLE FROM THE STREET FRONTING THE PROPERTY. THE NUMBER SHALL CONTRAST WITH THEIR BACKGROUND, BE ARABIC NUMERALS OR ALPHABET LETTERS, AND BE A MINIMUM OF 4 INCHES HIGH WITH A MINIMUM STROKE WIDTH OF 0.5 INCH. FIRE CODE 505.I
19. WATER EFFICIENCY AND CONSERVATION:FOR PROJECTS THAT INCLUDE LANDSCAPE WORK, THE LANDSCAPE CERTIFICATION, FORM GRN 12, SHALL BE COMPLETED PRIOR TO FINAL INSPECTION APPROVAL." (STATE ASSEMBLY BILL NO. 1881)
20. INTERIOR WALL AND CEILING FINISH SHALL HAVE A FLAME SPREAD INDEX NOT GREATER THAN THAT SPECIFIED IN T803.11. SPECIFY INTERIOR WALL AND CEUING FINISH ON PLANS. {LAFC 803.3}
21. MATERIAL, OTHER THAN FOAM PLASTICS, USED AS INTERIOR TRIM SHALL HAVE A MIN EXCEED CLASS 10% C OF NAME THE WALL SPREAD OR AND CELLING AREA IN SMOKE-DEVELOPED WHICH IT IS INDEX ATTACHED. AND SHALL {LAFC 804.1}
22. CURTAINS, DRAPERIES, FABRIC HANGINGS, AND SIMILAR COMBUSTIBLE DECORAUVE MATERIALS SUSPENDED FROM WALLS OR CEILINGS SHALL NOT EXCEED 10% OF THE WALL OR CEILING AREA TO WHICH SUCH MATERIALS ARE ATTACHED. {LAFC 807.3}
23. IN EVERY GROUP A, E, I, R-1, R-2, AND R-2.1, ALL DRAPES, HANGINGS,CURTAINS, DROJ§, AND ALL OTHER DECORATIVE MATERIAL SHALL BE MADE FROM A NONFLAMMABLE MATERIA, OR TREATED AND MAINTAINED IN A FLAMERETARDANT CONDITION BY MEANS OF A FLAME-RETARDANT SOLUTION OR PROCESS APPROVED BY THE OSFM. {TILLE 19, DIV 1, 3.08}

PLAN NOTES

- SEE A400'S FOR ENLARGED UNIT PLANS
- SEE A500'S FOR ENLARGED KITCHEN PLANS, ENLARGED BATHROOM PLANS, ADA, AND CLEARANCES
- ALL GYPSUM FINISH INTERIOR WALLS MAINTAIN LEVEL 3 FINISH
- SEE FINISH PLAN FOR FINISH MATERIAL
- CONSTRUCTION CREW TO COVER DUCT OPENINGS AND PROTECT MECH EQUIPMENT DURING CONSTRUCTION = CBC 11 - 4.410.1
- MATERIALS WITH VISIBLE WATER DAMAGE SHALL NOT BE INSTALLED.
- FOR ALL ELEVATIONS - SEE CIVIL

PLAN LEGEND

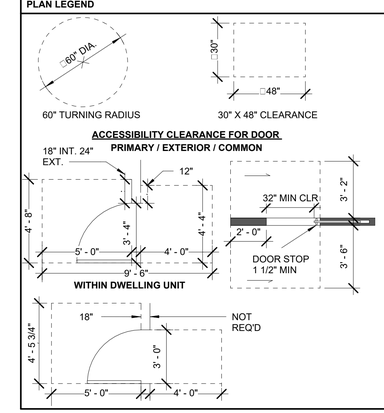

www.ULTRA-UNIT.com Architectural Studio
www.ULTRA-UNIT.com

Architect:
Ultra-Unit Architectural Studio
1327 Loma Avenue
Long Beach, California 90804
e. cameron@ultra-unit.com

Structural Engineer:
David Choi & Associates
1327 Loma Avenue
Long Beach, California 90804
e. david@dca-se.com

Owner:
Sarah Johnson
1377 N Garey Ave, LP
3982 S Figueroa St, Suite 209
Los Angeles CA, 90037
development@pathway2tomorrow.org

Architect Stamp

LICENSED ARCHITECT — CAMERON CROCKETT C31503 — 1.31.2025 RENEWAL DATE — STATE OF CALIFORNIA

Date 10/7/2024

Project: **N GAREY AVE** 1377 N GAREY AVE POMONA, CA

Client Name: SOUTHLAND DEVELOPMENT CO. INC.

Revisions

No.	Description	Date

Sheet Name: PROJECT DATA

Sheet Number: 001

Project Number	23-1025
Drawn By	GG
Checked By	CC
Scale	1/4" = 1'-0"

C:\Users\User\Desktop\1377 N Garey Ave _ R24_DL_cams.rvt

7/16/2025 11:42:08 AM

FIRE/LIFE SAFETY NOTES

1. PROVIDE AN APPROVED CLASS I STANDPIPE SYSTEM IN ACCORDANCE WITH BUILDING CODE & FIRE CODE SECTION 905.

2. EACH STANDPIPE SHALL BE EQUIPPED WITH AN APPROVED 2 1/2 INCH OUTLET NOT LESS THAN 2 FEET OR MORE THAN 4 FEET ABOVE THE FLOOR LEVEL OF EACH STORY. STANDPIPE OUTLETS IN STAIRWAY ENCLOSURES OR SMOKEPROOF ENCLUSURES SHALL BE LOCATED SO THAT THE EXIT DOORS DO NOT INTERFERE WITH THE USE OF THE OUTLET AND LOCATED ON THE MAIN STAIR LANDING. ALL OUTLETS SHALL BE EQUIPPED WITH AN APPROVED VALVE, CAP AND CHAINS. FIRE CODE 905.4.3

3. PORTABLE FIRE EXTINGUISHERS SHALL BE INSTALLED AND MAINTAINED IN ALL OCCUPANCE GROUPS AND AT SUCH LOCATIONS AS REQUIRED BY FIRE CODE 906 AND CALIFORNIA CODE OF REGULATIONS, TITLE 19, DIVISION 1, CHAPTER 3. THE FINAL NUMBER AND LOCATION OF ALL EXTINGUISHERS SHALL BE DETERMINED BY THE LOCAL AREA FIRE INSPECTOR.

4. ELEVATORS SHALL BE PROVIDED WITH PHASE I EMERGENCY RECALL OPERATION AND PHASE II EMERGENCY IN-CAR OPERATION IN ACCORDANCE WITH CALIFORNIA CODE OF REQULATIONS. TITLE 8, DIVISION 1, CHAPTER 4, SUBCHAPTER6, ELEVATOR SAFETY ORDERS. BUILDING CODE 3003.2

5. ALL ELEVATORS SHALL BE EQUIPPED TO OPERATE WITH A STANDARDIZED FIRE SERVICE ELEVATOR KEY IN ACCORDANCE WITH FIRE CODE 604.6.2. BUILDING CODE 3003.3

6. ESCALATORS, MOVING WALKS, CONVEYORS, PERSONNEL HOISTS AND MATERIAL HOISTS SHALL COMPLY WITH BUILDING CODE 3004

7. DUMPSTERS AND CONTAINERS WITH AN INDIVIDUAL CAPACITY OF 1.5 CUBIC YARDS OR MORE SHALL NOT BE STORED IN BUILDINGS OR PLACED WITHIN 5 FEET OF COMBUSTIBLE WALLS, OPENINGS OR COMBUSTIBLE ROOF EAVES, UNLESS AREAS CONTAIN DUMPSTERS OR CONTAINERS OR CONTAINERS ARE PROTECTED BY AN APPROVED AUTOMATIC FIRE SPRINKLER SYSTEM. FIRE CODE 304.3.3.

8. FIRE DEPARTMENT CONNECTIONS SHALL BE LOCATED ON THE STREET-ADDRESS SIDE OF BUILDINGS, FACING APPROVED FIRE APPARATUS ACCESS ROADS, WITHIN 150 FEET (VIA VEHICULAR ACCESS) OF AN ACCESSIBLE PUBLIC FIRE HYDRANT, AND AS CLOSE TO THE STREET CURB FACE AS POSSIBLE, FULLY VISIBLE, AND RECOGNIZABLE FROM THE STREET, FIRE APPARATUS ACCESS ROAD OR NEAREST POINT OF FIRE DEPARTMENT VEHICLE ACCESS OR AS OTHERWISE APPROVED BY THE FIRE CODE OFFICIAL. FIRE DEPARTMENT CONNECTIONS SHALL BE LOCATED A MINIMUM OF 25 FEET (7,620 MM) FROM THE STRUCTURE. WHEN THIS DISTANCE CANNOT BE ACHIEVED, A MINIMUM TWO-HOUR, FIRE-RESISTIVE WALL SHALL BE PROVIDED FOR THE STRUCTURE WITH NO OPENINGS IN THE WALL, FOR 25 FEET (7,620 MM) IN EITHER DIRECTION FROM THE FIRE DEPARTMENT CONNECTION. THE REQUIRED FIRE-RESISTIVE CONSTRUCTION AND LACK OF OPENINGS SHALL EXTEND FOR THE FULL HEIGHT OF THE WALL OR BUILDING AS DETERMINED BY THE FIRE CODE OFFICIAL. THE FIRE CODE OFFICIAL MAY ALLOW SUFFICIENTLY PROTECTED OVERHEAD OPENINGS. FIRE DEPARTMENT CONNECTIONS SHALL BE LOCATED NOT LESS THAN 24 INCHES (609.6 MM) NOR MORE THAN 42 INCHES (1,066.8 MM) ABOVE GRADE. FIRE CODE 912.2.1

9. APPROVED ACCESS SHALL BE PROVIDED AND MAINTAINED FOR ALL FIRE PROTECTION SYSTEM EQUIPMENT TO PERMIT IMMEDIATE SAFE OPERATION AND MAINTENANCE OF SUCH EQUIPMENT. STORAGE, TRASH AND OTHER MATERIALS OR OBJECTS SHALL NOT BE PLACED OR KEPT IN SUCH A MANNER THAT WOULD PREVENT SUCH EQUIPMENT FROM BEING READILY ACCESSIBLE.

10. THE MEANS OF EGRESS ILLUMINATION LEVEL SHALL BE NOT LESS THAN 1 FOOTCANDLE AT THE WALKING SURFACE. ALONG EXIT ACCESS STAIRWAYS, EXIT STAIRWAYS AND AT THEIR REQUIRED LANDINGS, THE ILLUMINATION LEVEL SHALL BE NOT LESS THAN 10 FOOTCANDLES AT THE WALKING SURFACE WHEN THE STAIRWAY IS IN USE AS REQUIRED BY BUILDING CODE 1008.2.1.

11. IN THE EVENT OF POWER SUPPLY FAILURE IN ROOMS, SPACES AND BUILDINGS THAT REQUIRE TWO OR MORE MEANS OF EGRESS, AN EMERGENCY ELECTRICAL SYSTEM FOR A DURATION OF NOT LESS THAN 90 MINUTES IN ACCORDANCE WITH THE PROVISIONS SET FORTH IN BUILDING CODE 1008.3.

12. EGRESS DOORS SHALL BE READILY OPENABLE FROM THE EGRESS SIDE WITHOUT THE USE OF A KEY OR ANY SPECIAL KNOWLEDGE OR EFFORT IN ACCORDANCE WITH BUILDING CODE 1010.1.19..

13. EXIT SIGNS SHALL BE ILLUMINATED AT ALL TIMES. TO ENSURE CONTINUED ILLUMINATION FOR A DURATION OF NOT LESS 90 MINUTES IN CASE OF PRIMARY POWER LOSS, THE SIGN ILLUMINATION MEANS SHALL BE CONNECTED TO AN EMERGENCY POWER SYSTEM PROVIDED FROM STORAGE BATTERIES, UNIT EQUIPMENT OR AN ON-SITE GENERATOR.

ROOF PLAN NOTES

TOTAL COMBINED ROOF AREA = 11362SQFT
1704 SQFT SOLAR ZONE REQD - NO AREA LESS THAN 160SQFT
4 SOLAR ZONES AT 450SQFT = 1800SQFT PROVIDED

1. CONTRACTOR SHALL CONFIRM THAT ALL AREAS OF ROOF ARE PROVIDED WITH POSITIVE DRAINAGE.
2. ROOF PENETRATIONS SHALL BE FLASHED PER BUILDING AND MANUFACTURES SPECIFICATIONS.
3. CONTRACTOR SHALL BE RESPONSIBLE FOR COORDINATION OF SIZES AND LOCATIONS OF ROOF OPENINGS, PLATFORMS, BASES, LIGHTING, POWER, CONVENIENCE OUTLETS, ETC., WITH EQUIPMENT BEING SUPPLIED.
4. ALL ROOFING MATERIALS TO BE INSTALLED AS PER MANUFACTURE'S RECOMMENDATIONS AND SPECIFICATIONS.
5. PROVIDE ROOF INSULATION PER T-24 SHEETS.
6. PROVIDE RAIN GUTTERS, DIVERTERS AND DOWNSPOUTS AS REQUIRED, REFER TO GRADING PLANS FOR DRAINAGE PATTERNS.
7. ROOF DIAPHRAGM NAILING TO BE INSPECTED BEFORE COVERING. FACE GRAIN OF PLYWOOD SHALL BE PERPENDICULAR TO SUPPORTS.
8. ALL NEW CRICKETS SHALL SLOPE MINIMUM 1/2" PER FOOT.
9. PROVIDE ROOF SCUPPER WITH OVERFLOW TO DOWNSPOUTS AS SHOWN ON LID PLAN.
10. PARAPET DIMENSIONS ARE SHOWN FROM FACE OF FINISH UNO.
11. G.C. TO VERIFY ALL DIMENSIONS AND CONTACT ARCHITECT IF ANY DISCREPANCIES EXIST, PRIOR TO COMMENCING WORK.
12. G.C. TO ASSURE ROOF INSTALLATION AND ALL PENETRATIONS TO BE FULLY WEATHERTIGHT.
13. ROOFING TO COMPLY WITH UBC STANDARDS 15-4 AND SHALL BE INSTALLED IN ACCORDANCE WITH TABLE 15-B-2 (R902.1)
14. INSTALLED ROOFING OVER MINIMUM 30# UNDERLAYMENT.
15. THE QUALITY AND DESIGN OF ROOFING MATERIALS AND THEIR FASTENING DEVICES SHALL CONFORM TO THE APPLICABLE STANDARDS LISTED IN CHAPTER 35, PART II (1507.1)
16. ALL MATERIALS SHALL BE DELIVERED IN PACKAGES BEARING THE MANUFACTURERS LABEL OR IDENTIFYING MARK.
17. THE ROOFING INSTALLER SHALL BE RESPONSIBLE FOR PROVIDING A COMPLETE WATERPROOF INSTALLATION INCLUDING ALL NECESSARY FLASHING, CAPS, PIPE JACKS, OPENING PROTECTION AND SEALANTS. ALL ROOFING SHALL COMPLY WITH NRCA STANDARDS UBC CHAPTER 13.
18. VERIFY THAT ALL AREAS HAVE A POSITIVE 1/4" PER FOOT MIN. ROOF DRAINAGE PRIOR TO INSTALLATION.
19. DOWNSPOUTS ARE SIZED EITHER FOR UPC CODE AVERAGE 6"/ HOUR RAINFALL OR MINIMUM 8" INTERIOR DIA. - WHICHEVER IS GREATER.
20. PROVIDE PLYWOOD OR FELT CRICKETS AS REQUIRED TO MAINTAIN 1/2" PER FOOT DRAINAGE AT EQUIPMENT PADS AND ROOF HATCH.
21. INSTALLED ROOFING MATERIALS AS SOON AS POSSIBLE AFTER INSTALLATION OF METAL ROOF DECK TO MINIMIZE EXPOSURE OF THE DECK TO MOISTURE SOURCES.
22. ALL EXPOSED ROOF METAL AND VENTS SHALL BE PRIMED AND PREPARED FOR PAINT FINISH. PAINT SHALL MATCH EXTERIOR WALL COLOR PER EXTERIOR FINISH SCHEDULE.
23. ALL/ANY ROOF PENETRATIONS SHALL BE MINIMUM 18" AWAY FROM AIR CONDITIONING UNITS AND A MINIMUM18" FROM OTHER PENETRATIONS.
24. VENTS THROUGH ROOF SHALL BE INSTALLED 10'-0" FROM AND TERMINATED 3'-0" ABOVE ANY FRESH AIR INTAKES.
25. OPENINGS IN THE BUILDING ENVELOPE THAT ARE POTENTIAL SOURCES OF AIR LEAKAGE SHALL BE CAULKED, GASKETED, WEATHER-STRIPE OR OTHERWISE SEALED TO LIMIT INFILTRATION AND EXFILTRATION.
26. CONTRACTOR SHALL VERIFY THAT ALL GAS LINES CONDENSATION AND ALL CONDUIT LINES SHALL NOT EXTEND ABOVE ROOF SURFACES.
27. LEAD FLASHING SHALL BE USED AT ALL ROOF AND OVERFLOW DRAIN PENETRATIONS.
28. MATERIAL USED FOR ROOF SHEATHING: WOOD STRUCTURAL PANELS USED FOR ROOF SHEATHING SHALL BE BONDED BY INTERMEDIATE OR EXTERIOR GLUE. (CBC 2320.12.9)
29. THE ROOF SHEATHING SHALL INCLUDE A RADIANT BARRIER.
30. THE MAIN ELECTRICAL SERVICE PANEL SHALL HAVE A RESERVED SPACE TO ALLOW FOR INSTALLATION OF A DOUBLE POLE CIRCUIT BREAKER FOR A FUTURE SOLAR ELECTRIC INSTALLATION. THE RESERVED SPACE SHALL BE POSITIONED AT THE OPPOSITE (LOAD) END FROM THE INPUT FEEDER LOCATION OR MAIN CIRCUIT LOCATION AND SHALL BE PERMANENTLY MARKED AS "FOR FUTURE SOLAR ELECTRIC" (4.211.4 ENERGY CODE AND 110.10 LAFD REQUIREMENT NO. 96)

EQUIPMENT ON ROOF CMC 2016 308.1.1-6,304

1. ENCLOSURES. EQUIPMENT ON ROOF SHALL BE DESIGNED OR ENCLOSED SO AS TO WITHSTAND CLIMATIC CONDITIONS IN THE AREAS IN WHICH IT IS INSTALLED. WHERE ENCLOSURES ARE PROVIDED, EACH ENCLOSURE SHALL BE OF REASONABLE HEIGHT, AND SHALL HAVE AT LEAST A THIRTY (30) INCH (762 MM) CLEARANCE BETWEEN THE ENTIRE SERVICE ACCESS PANEL(S) OF THE EQUIPMENT AND THE WALL OF THE ENCLOSURE.
2. ROOF SUPPORT. ROOFS ON WHICH EQUIPMENT IS TO BE INSTALLED SHALL BE CAPABLE OF SUPPORTING THE ADDITIONAL LOAD OR SHALL BE REINFORCED TO SUPPORT THE ADDITIONAL LOAD.
3. CORROSION RESISTANCE. ALL ACCESS LOCKS, SCREWS, AND BOLTS SHALL BE OF CORROSION-RESISTANT MATERIAL.
4. ROOF DRAINAGE. EQUIPMENT SHALL BE INSTALLED ON A WELL-DRAINED SURFACE OF THE ROOF.
5. GUARDS OR RAILS. AT LEAST SIX (6) FT. (1,829 MM) BETWEEN ANY PART OF THE EQUIPMENT AND THE EDGE OF A ROOF OR SIMILAR HAZARD, OR RIGIDLY FIXED RAIL, GUARDS, PARAPETS, OR OTHER BUILDING STRUCTURES AT LEAST FORTY-TWO (42) INCHES (1,067 MM) IN HEIGHT SHALL BE PROVIDED ON THE EXPOSED SIDE.
6. ELECTRICAL POWER. ALL EQUIPMENT REQUIRING AN EXTERNAL SOURCE OF ELECTRICAL POWER FOR ITS OPERATION SHALL BE PROVIDED WITH:
   1. READILY ACCESSIBLE ELECTRICAL DISCONNECTING MEANS WITHIN SIGHT OF THE EQUIPMENT.
   2. A 120 VAC GROUNDING-TYPE RECEPTACLE OUTLET ON THE ROOF ADJACENT TO THE EQUIPMENT. THE RECEPTACLE OUTLET SHALL BE ON THE SUPPLY SIDE OF THE DISCONNECT SWITCH.
7. SERVICE AND ACCESS TO EQUIPMENT AND APPLIANCES. EQUIPMENT AND APPLIANCES SHALL BE ACCESSIBLE FOR INSPECTION, SERVICE, REPAIR, AND REPLACEMENT WITHOUT REMOVING PERMANENT CONSTRUCTION. SUFFICIENT CLEARANCE SHALL BE MAINTAINED TO PERMIT CLEANING OF HEATING SURFACES; THE REPLACEMENT OF FILTERS, BLOWERS, MOTORS, BURNERS, CONTROLS, AND VENT CONNECTIONS; THE LUBRICATION OF MOVING PARTS WHERE NECESSARY; THE ADJUSTMENT AND CLEANING OF BURNERS AND PILOTS; AND THE PROPER FUNCTIONING OF EXPLOSION VENTS, IF PROVIDED. [NFPA 54-09:9.2.1] UNLESS OTHERWISE SPECIFIED, NOT LESS THAN THIRTY (30) I INCHES (762 MM) IN DEPTH, WIDTH, AND HEIGHT OF WORKING SPACE SHALL BE PROVIDED.

CLASS B - BUILT UP ROOFING-WHITE SURFACED

1. THE PANEL OR SUBPANEL SHALL PROVIDE CAPACITY TO INSTALL A 40-AMPERE MINIMUM DEDICATED BRANCH CIRCUIT AND SPACE(S) RESERVED TO PERMINT INSTALLATION OF A BRANCH CIRCUIT OVER CURRENT PROTECTIVE DEVICE.
2. THE SERVICE PANEL OR SUBPANEL CIRCUIT DIRECTORY SHALL IDENTIFY THE OVER CURRENT PROTECTIVE DEVICE SPACE(S) RESERVED FOR FUTURE EV CHARCHING AS EV CAPABLE THE RACEWAY TERMINATION LOCATION SHALL BE PERMANENT AND VISIBLY MARKED EV CAPABLE.
3. A COPY OF THE CONSTRUCTION DOCUMENTS OR A COMPARABLE DOCUMENT INDICATING THE INFORMATION FROM ENERGY CODE SECTIONS 110.10(B) TROUGH 110.10(C) SHALL BE PROVIDED TO THE OCCUPANT. (ENERGY CODE 110.10(D))

NOTES

1. EXTERIOR STUCCO:
A. MATERIALS & APPLICATION SHALL COMPLY WITH APPLICABLE SECTIONS OF THE "HANDBOOK OF RECOMMENDED SPECIFICATIONS FOR LATHING, FURRING & PLASTERING" BY THE CALIFORNIA LATHING/ PLASTERING CONTRACTORS ASSOC. AND CHAPTER 25, CBC. EXTERIOR STUCCO COLORS, TEXTURE AND FINISH SHALL BE SELECTED AND APPROVED BY OWNER.
B. STUCCO LATH SHALL BE NAILED TO ALL STUDS AND TOP AND BOTTOM PLATES
C. ALL STUCCO SHALL BE PLUMB & EVEN WITHIN 1/8" IN 10'. STUCCO SHALL BE 3 COATS W/ FINAL COAT BEING A LATEX BASED COLOR COAT.
2. EACH PANEL OF SAFETY GLAZING INSTALLED IN HAZARDOUS LOCATIONS SHALL BE IDENTIFIED BY A MANUFACTURE'S DESIGNATION SPECIFYING WHO APPLIED THE DESIGNATION, THE MANUFACTURER OR INSTALLER AND THE SAFETY GLAZING STANDARD. THE FOLLOWING SHALL BE CONSIDERED SPECIFIC HAZARDOUS LOCATIONS FOR THE PURPOSED OF SAFETY GLAZING. GLAZING IN: SECTION 2406
A. SWING DOORS.
B. FIXED AND SLIDING PANELS OF SLIDING DOOR ASSEMBLIES AND PANELS IN SLIDING AND BI-FOLD CLOSET FLOOR ASSEMBLIES.
C. STORM DOORS.
D. UNFRAMED SWING DOORS.
E. DOORS AND ENCLOSURES FOR HOT TUBS, WHIRLPOOLS, SAUNAS, STEAM ROOMS, BATHTUBS, AND SHOWERS.
F. FIXED OR OPERABLE PANELS ADJACENT TO A DOOR WHERE THE NEAREST EXPOSED EDGE OF THE GLAZING IS WITHIN 24 INCHES(610MM) ARC OF EITHER VERTICAL EDGE OF THE DOOR IN A CLOSED POSITION AND WHERE THE BOTTOM EXPOSED EDGE OF THE GLAZING IS LESS THAN 60 INCHES(1525MM) ABOVE THE WALKING SURFACE. READ CODE FOR EXCEPTIONS.
G. FIXED OR OPERABLE PANEL, OTHER THAN DESCRIBED IN ITEMS E AND F, WHICH MEETS ALL OF THER FOLLOWING CONDITIONS(READ CODE FOR EXCEPTION WITH SPECIAL INSTALLATION).
   G.1 EXPOSED AREA OF AN INDIVIDUAL PANE GREATER THAN 9 SOFT($0.84M^2$)
   G.2 EXPOSED BOTTOM EDGE LESS THAN 18 INCHES(457MM) ABOVE THE FLOOR.
   G.3 EXPOSED TOP EDGE GREATER THAN 36 INCHES(914MM) ABOVE FLOOR.
   G.4 ONE OR MORE WALKING SURFACE WITHIN 35 INCHES(914MM) HORIZONTALLY OF THE PLANE OF THE GLAZING.
H. GUARDS AND RAILINGS REGARDLESS OF AREA OR HEIGHT ABOVE A WALKING SURFACE. INCLUDED ARE STRUCTURAL BALUSTER PANELS AND NONSTRUCTURAL IN-FILL PANELS.
I. WALLS AND FENCE ENCLOSING INDOOR AND OUTDOOR SWIMMING POOLS AND SPAS WHERE ALL OF THE FOLLOWING CONDITIONS ARE PRESENT:
   I.1 THE BOTTOM EDGE OF THE GLAZING IS LESS THAN 60 INCHES(1525MM) ABOVE A WALKING SURFACE ON THE POOL OR SPA SIDE OF THE GLAZING.
   I.2 THE GLAZING IS WITHIN 60 INCHES(1525MM) OF A SWIMMING POOL OR SPA WATER'S EDGE.
J. ADJACENT TO STAIRWAYS, LANDINGS AND RAMPS WITHIN 36 INCHES HORIZONTALLY OF A WALKING SURFACE(READ CODE FOR EXCEPTION WITH SPECIAL INSTALLATION).
K. ADJACENT TO STAIRWAYS WITHIN 60 INCHES HORIZONTALLY OF THE BOTTOM TREAD OF A STAIRWAY IN ANY DIRECTION WHEN THE EXPOSED SURFACE OF THE GLASS IS LESS THAN 60 INCHES ABOVE THE NOSE OF THE TREAD(READ CODE FOR EXCEPTION WITH SPECIAL INSTALLATION).

GYPSUM WALLBOARD (DRYWALL) 5/8":
1. ALL GYPSUM WALLBOARD SHALL BE INSTALLED IN ACCORDANCE WITH THE PROVISIONS SET FORTH IN THE CURRENT EDITION OF THE CBC, AND APPLICABLE AGENCIES.
2. GYPSUM WALLBOARD SHALL NOT BE INSTALLED UNTIL WEATHER PROTECTION FOR THE INSTALLATION IS PROVIDED.
3. SINGLE-PLY APPLICATION.

1. ALL EDGES AND ENDS OF GYPSUM WALLBOARD SHALL OCCUR ON THE FRAMING MEMBERS, EXCEPT THOSE EDGES AND ENDS THAT ARE PERPENDICULAR TO THE FRAMING MEMBERS. ALL EDGES AND ENDS OF GYPSUM WALLBOARD SHALL BE IN MODERATE CONTACT EXCEPT IN CONCEALED SPACES WHERE FIRE-RESISTIVITY CONSTRUCTION OR DIAPHRAGM ACTION IS NOT REQUIRED.
2. THE SIZE AND SPACING OF FASTENERS SHALL COMPLY WITH THE CURRENT EDITION OF THE CBC EXCEPT WHERE MODIFIED BY FIRE-RESISTIVITY CONSTRUCTION. FASTENERS SHALL NOT BE SPACED LESS THAN 3/8 INCH FROM EDGES AND ENDS OF GYPSUM WALLBOARD. FASTENERS AT THE TOP AND BOTTOM PLATES OF VERTICAL ASSEMBLIES, OR THE EDGES AND ENDS OF HORIZONTAL ASSEMBLIES PERPENDICULAR TO SUPPORTS, AND AT THE WALL LINE MAY BE OMITTED EXCEPT ON SHEAR-RESISTING ELEMENTS OR FIRE-RESISTIVITY ASSEMBLIES. FASTENERS SHALL BE APPLIED IN SUCH A MANNER AS NOT TO FRACTURE THE FACE PAPER WITH THE FASTENER HEAD.
3. WHEN GYPSUM IS USED AS A BASE FOR TILE OR WALL PANELS FOR TUB, SHOWER OR WATER CLOSET COMPARTMENT WALLS , WATER-RESISTANT GYPSUM BACKING BOARD SHALL BE USED.
4 WATER-RESISTANT GYPSUM BOARD SHALL NOT BE USED IN THE FOLLOWING LOCATIONS:
4.1. OVER A VAPOR RETARDER
4.2. IN AREAS SUBJECT TO CONTINUOUS HIGH HUMIDITY, SUCH AS SAUNAS, STEAM OOMS OR GANG SHOWER ROOMS.
4.3. ON CEILINGS WHERE FRAME SPACING EXCEEDS 12 INCHES ON CENTER.
5. PROVIDE 5/8" GYPSUM WALLBOARD @ ALL INTERIOR WALLS U.N.O. AND 1/2" GYPSUM WALLBOARD @ ALL INTERIOR CEILING SURFACES, U.N.O.
6. ALL GYPSUM WALLBOARD SHALL HAVE THE FOLLOWING:
6.1. AT JOINTS: PROVIDE PERFORATED TAPE, BEDDING & TAPING COMPOUND FINISHED SMOOTH @ ALL JOINTS. PROVIDE BULL NOSED CORNERS @ ALL INTERIOR CORNERS.
6.2. FNISH: WALLS SHALL HAVE A SMOOTH OR LIGHT ORANGE PEAL FINISH
6.3. LINOLEUM: MATERIALS, COLOR & FINISH SHALL BE SELECTED & APPROVED BY THE OWNER. FLOORING SUB-CONTRACTOR SHALL FURNISH, INSTALL & FINISH ALL FLOORING WORK TO BE TRUE & PLUMB. INSTALL PER MANUFACTURERS INSTALLATION INSTRUCTIONS.
6.4.TILE FLOORING: THE OWNER SHALL SELECT ALL FLOOR TILE & COLORS. ALL TILE MATERIALS SHALL BE INSTALLED "LATEX-PORTLAND CEMENT MORTAR SET", NO HAND-SET TILE APPLICATIONS WILL BE ALLOWED. CONTRACTOR SHALL SUPPLY ALL MATERIALS, PREP. AND INSTALL.
6.5. ALL AREAS & INSTALL ALL CERAMIC TILE MATERIALS IN STRICT CONFORMANCE WITH THE LATEST EDITION OF THE AMERICAN TILE INSTITUTE, HANDBOOK FOR TILE INSTALLATION.

SOLAR ZONE

THE SOLAR ZONE IS AN ALLOCATED SPACE THAT IS UNSHADED, UN-PENETRATED, AND FREE OF OBSTRUCTIONS. IT SERVES AS A SUITABLE PLACE THAT SOLAR PANELS CAN BE INSTALLED AT A FUTURE DATE.
SOLAR ZONE CALCULATIONS
TOTAL ROOF AREA: 2541 SF
TOTAL AREA REQUIRED SOLAR ZONE (15%)
(2541 SF X 0.15) = 381 SF REQUIRED. SOLAR ZONE PROVIDED: 381 SF
NOTE:
- MINIMUM DIMENSION 5'-0", 80 SF
- NO OBSTRUCTIONS AND 2 TIMES HEIGHT OF OBSTRUCTION SETBACK.
- MINIMUM 4'-0" CENTERLINE ACCESS PATH TO STAND PIPES, ROOF HATCHES, SKYLIGHTS OR VENT HATCHES.
- SOLAR ZONE SHALL HAVE 4'-0" CLEAR PERIMETER ACCESS.
- THE SOLAR ZONE SHALL BE ORIENTED BETWEEN 10 DEG. AND 270 DEG. FROM THE NORTH. A MINIMUM OF 1" METALIC CONDUIT TERMINATION POINT FOR FUTURE SOLAR USE.
- THE MAIN ELECTRICAL SERVICE PANEL SHALL HAVE A RESERVED SPACE TO ALLOW FOR INSTALLATION OF A DOUBLE POLE CIRCUIT BREAKER FOR A FUTURE SOLAR ELECTRIC INSTALLATION. THE RESERVED SPACE SHALL BE POSITIONED AT THE OPPOSITE (LOAD) END FROM THE INPUT FEEDER LOCATION OR MAIN CIRCUIT LOCATION AND SHALL BE PERMANENTLY MARKED AS "FOR FUTURE SOLAR ELECTRIC"
- A COPY OF THE CONSTRUCTION DOCUMENTS OR A COMPARABLE DOCUMENT INDICATING THE INFORMATION FROM ENERGY CODE SECTIONS L L 0.1 0(B) THROUGH L L 0. I 0(C) SHALL BE PROVIDED TO THE OCCUPANT.

MINIMUM VENT AREA

TOTAL ROOF AREA: XXXX
TOTAL AREA ROOF VENT. REQUIERED (1/150)
(XXXXX SF / 150) = XXXX SF
PROVIDED: XXXXX SF

www.ULTRA-UNIT.com

Architect:
Ultra-Unit Architectural Studio
1327 Loma Avenue
Long Beach, California 90804
e. cameron@ultra-unit.com

Structural Engineer:
David Choi & Associates
1327 Loma Avenue
Long Beach, California 90804
e. david@dca-se.com

Owner:
Sarah Johnson
1377 N Garey Ave, LP
3982 S Figueroa St, Suite 209
Los Angeles CA, 90037
development@pathway2tomorrow.org

Architect Stamp

LICENSED ARCHITECT
CAMERON CROCKETT
C31503
1.31.2025
RENEWAL DATE
STATE OF CALIFORNIA

Date 10/7/2024

Project: **N GAREY AVE**
1377 N GAREY AVE
POMONA, CA

Client Name: SOUTHLAND DEVELOPMENT CO. INC.

Revisions

No.	Description	Date

Sheet Name
PROJECT DATA

Sheet Number
002

Project Number	23-1025
Drawn By	GG
Checked By	CC
Scale	1/4" = 1'-0"

7/16/2025 11:42:10 AM C:\Users\User\Desktop\1377 N Garey Ave _ R24_DL_cams.rvt

FRONT FACADE VIEW

FRONT FACADE VIEW

SIDE FACADE VIEW

SIDE FACADE VIEW

www.ULTRA-UNIT.com Architectural Studio

www.ULTRA-UNIT.com

Architect:
Ultra-Unit Architectural Studio
1327 Loma Avenue
Long Beach, California 90804
e. cameron@ultra-unit.com

Structural Engineer:
David Choi & Associates
1327 Loma Avenue
Long Beach, California 90804
e. david@dca-se.com

Owner:
Sarah Johnson
1377 N Garey Ave, LP
3982 S Figueroa St, Suite 209
Los Angeles CA, 90037
development@pathway2tomorrow.org

Architect Stamp

LICENSED ARCHITECT
CAMERON CROCKETT
C31503
1.31.2025
RENEWAL DATE
STATE OF CALIFORNIA

Date 10/7/2024

Project: **N GAREY AVE**
1377 N GAREY AVE
POMONA, CA

Client Name: SOUTHLAND DEVELOPMENT CO. INC.

Revisions

No.	Description	Date

Sheet Name
RENDERINGS

Sheet Number
003

Project Number	23-1025
Drawn By	GG
Checked By	CC
Scale	12" = 1'-0"

7/16/2025 11:42:11 AM C:\Users\User\Desktop\1377 N Garey Ave_ R24_DL_cams.rvt

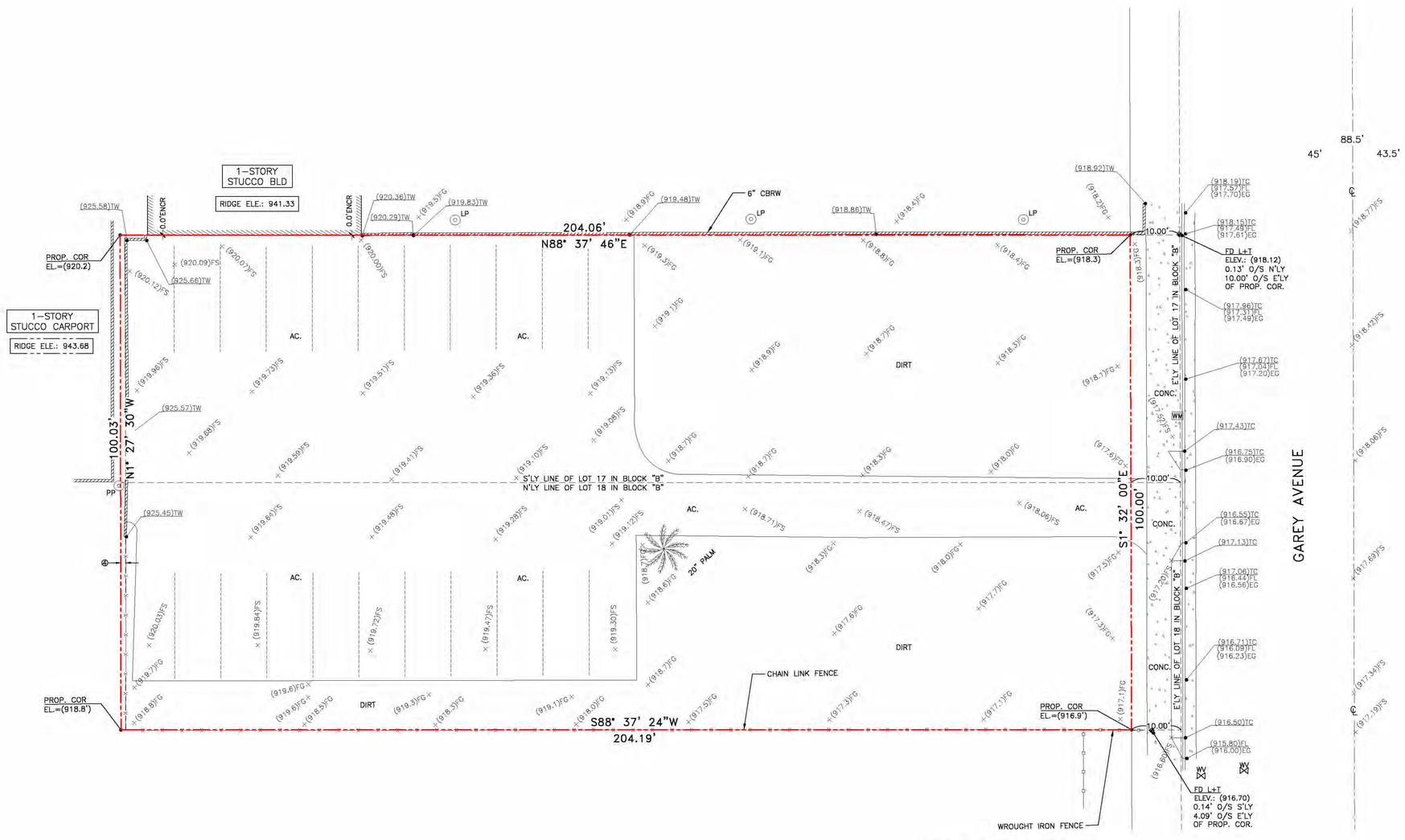

LEGEND

A.C.	ASPHALT CONCRETE PAVEMENT
B.M.	BENCH MARK
C.B.W.	CONCRETE BLOCK WALL
C.B.R.W.	CONCRETE BLOCK RETAINING WALL
CONC.	CONCRETE
C/O	SEWER CLEANOUT
DWY.	CONC. DRIVEWAY APRON
E.G.	EDGE OF GUTTER
E.M.	ELECTRIC METER
E.P.	EDGE OF PAVEMENT
E.V.	ELECTRIC VALVE
F.F.	FINISHED FLOOR
F.G.	FINISHED GRADE
F.H.	FIRE HYDRANT
F.S.	FINISHED SURFACE
F.L.	FLOW LINE
G.M.	GAS METER
INV.	DRAIN INVERT
I.C.V.	IRRIGATION CONTROL VALVE
P.B.	PULL BOX
P.C.R.W.	POURED CONC. RETAINING WALL
R.R.W.	ROCK RETAINING WALL
S.S.M.H.	SEWER MANHOLE
S.D.M.	STORM DRAIN MANHOLE
T.C.	TOP OF CURB
T.G.	TOP OF DRAIN GRATE
T.W.	TOP OF WALL
W.M.H.	WATER MANHOLE
W.V.	WATER VALVE
--------	OVERHANG
— — — —	EASEMENT LIMIT
	CONCRETE SURFACE
8"	TREE AND TRUNK DIAMETER
//	WOOD FENCE
PP	POWER POLE
LP	LIGHT POLE

TOPOGRAPHIC NOTES

1. CONTOUR LINES SHOWN ON THIS TOPOGRAPHIC SURVEY WERE GENERATED FROM RANDOM SPOT ELEVATIONS. THE EXPECTED LEVEL OF ACCURACY IS ±1/2 OF THE CONTOUR INTERVAL. ISOLATED ELEVATIONS, AS PLACED ON THE PLAT WERE PHYSICALLY MEASURED AT APPROXIMATELY THE LOCATIONS SHOWN. THEIR EXPECTED LEVEL OF ACCURACY IS ± 0.10 FOOT.
2. IF SPECIFIC ELEVATIONS ARE REQUIRED, THE USER SHOULD CONTACT PACIFIC LAND CONSULTANTS, INC., TEL: (310)544-8689 FOR SAME. INTERPOLATIONS MADE FROM THIS TOPOGRAPHIC SURVEY SHOULD BE DONE IN ACCORDANCE WITH STANDARD SURVEYING PRACTICES, AND LABILITY FOR INTERPOLATIONS IS NOT ASSUMED BY PACIFIC LAND CONSULTANTS, INC.

SURVEY CERTIFICATION

I HEREBY CERTIFY THAT I AM A REGISTERED LAND SURVEYOR OF THE STATE OF CALIFORNIA, THAT THIS PLAT CONSISTING OF ONE SHEET CORRECTLY REPRESENTS A SURVEY MADE UNDER MY SUPERVISION IN JANUARY, 2024; THAT ALL MONUMENTS SHOWN HEREON ACTUALLY EXIST AND THEIR POSITIONS ARE CORRECTLY SHOWN. THIS SURVEY DOES NOT INCLUDE EASEMENTS EXCEPT THOSE SPECIFICALLY DELINEATED HEREON.

2/7/2024
DATE

CHRISTOPHER W. VASSALLO P.L.S. 8418
REGISTRATION EXPIRES 12-31-2024

PROFESSIONAL LAND SURVEYOR CHRISTOPHER W. VASSALLO P.L.S. 8418 EXP. 12/31/2024 STATE OF CALIFORNIA

0 1 5 10 FEET 20
1" = 10'

LEGAL DESCRIPTION

LOTS 17 & 18 IN BLOCK "B" OF PLAT OF NORTH 10 ACRES OF BURBANK TRACT, IN THE CITY OF POMONA, COUNTY OF LOS ANGELES, STATE OF CALIFORNIA, AS PER MAP RECORDED IN BOOK 16, PAGE 37, OF MAPS, IN THE OFFICE OF THE COUNTY RECORDER OF SAID COUNTY.

EXCEPT THEREFROM THE EAST 10 FEET.

EASEMENTS

(3) AN EASEMENT FOR WATERPIPES, RECORDED IN BOOK 165, PAGE 22 OF DEEDS IN THE OFFICE OF THE RECORDER OF SAID COUNTY.
AFFECTS: EASEMENT LOCATION UNDETERMINABLE FROM DOCUMENT

(4) AN EASEMENT FOR POLES, CONDUITS AND CABLES, RECORDED IN BOOK 16270, PAGE 339, OF OFFICIAL RECORDS IN THE OFFICE OF THE RECORDER OF SAID COUNTY.
AFFECTS: THE WESTERLY 1 FOOT OF LOTS 17 & 18 OF BLOCK "B"

AREA = 20,414.95 SQ.FT.

APN= 8339-027-015
&
APN= 8339-027-016

PLEASE NOTE

IF THIS DRAWING IS PROVIDED IN AN ELECTRONIC FORMAT (VIA EMAIL OR ON COMPUTER DISC) AS A COURTESY TO OUR CLIENT, THE DELIVERY OF THE ELECTRONIC FILE DOES NOT CONSTITUTE THE DELIVERY OF OUR PROFESSIONAL WORK PRODUCT. IN THE EVENT THE ELECTRONIC FILE IS ALTERED, THE PRINT MUST BE REFERRED TO FOR THE ORIGINAL AND CORRECT SURVEY INFORMATION. PACIFIC LAND CONSULTANTS, INC. SHALL NOT BE RESPONSIBLE FOR ANY MODIFICATIONS MADE TO THE ELECTRONIC FILE OR FOR ANY PRODUCTS DERIVED FROM THE ELECTRONIC FILE WHICH ARE NOT REVIEWED, SIGNED AND SEALED BY PACIFIC LAND CONSULTANTS, INC.

UNDERGROUND UTILITIES

ALL INFORMATION SHOWN HEREON REGARDING UNDERGROUND UTILITIES WAS TAKEN FROM VISIBLE SURFACE EVIDENCE OR SOURCES NOT CONNECTED WITH THIS COMPANY AND WHILE SAID INFORMATION IS BELIEVED CORRECT, NO LIABILITY IS ASSUMED FOR THE ACCURACY OR COMPLETENESS OF SAID DATA.

BENCHMARK

LACDPW BM# JC4300
LEAD & NAIL IN CENTER OF CB RET @ NE COR. WHITE AVE & ORANGE GROVE AVE
NAVD: 1988
ELEV.: 889.360'

PACIFIC LAND CONSULTANTS ESTABLISHED 1994

PACIFIC LAND CONSULTANTS, INC.
28441 HIGHRIDGE RD. SUITE 230
ROLLING HILLS ESTATES, CA 90274
(310) 544-8689

DRAWN BY: A.P.

PROJECT SITE:
1377 N. GAREY AVENUE
POMONA, CA

FILE NAME: 24009LS.DWG
DATE: 2-5-2024
SCALE: 1" = 10'
JOB NO. 24009
SHEET 1 OF 1

www.ULTRA-UNIT.com

Architect:
Ultra-Unit Architectural Studio
1327 Loma Avenue
Long Beach, California 90804
e. cameron@ultra-unit.com

Structural Engineer:
David Choi & Associates
1327 Loma Avenue
Long Beach, California 90804
e. david@dca-se.com

Owner:
Sarah Johnson
1377 N Garey Ave, LP
3982 S Figueroa St, Suite 209
Los Angeles CA, 90037
development@pathway2tomorrow.org

Architect Stamp
LICENSED ARCHITECT CAMERON CROCKETT C31503 1.31.2025 RENEWAL DATE STATE OF CALIFORNIA

Date 10/7/2024

Project: **N GAREY AVE** 1377 N GAREY AVE POMONA, CA

Client Name: SOUTHLAND DEVELOPMENT CO. INC.

Revisions

No.	Description	Date

Sheet Name: SITE SURVEY

Sheet Number: 050

Project Number	23-1025
Drawn By	GG
Checked By	CC
Scale	1" = 10'-0"

7/16/2025 11:42:12 AM C:\Users\User\Desktop\1377 N Garey Ave _ R24_DL_cams.rvt

SITEPLAN DEMOLITION NOTES

1	EXISTING SIDEWALK TO REMAIN. REPAIR AS REQUIRED. PROVIDE NEW CONCRETE AT DEMOLITION OF EXSITNG DRIVEWAY, PROVIDE CUT AT PROPOSED LANDSCAPE PER PLAN
2	EXISTING CMU FANCE TO REMAIN
3	EXISTING BUILDING WALL TO REMAIN
4	EXISTING CHAIN-LINK FENCE TO REMAIN
5	EXISTING WROUGHT IRON FENCE TO REMAIN
6	EXISTING CONCRETE SLAB TO BE DEMOLISHED
7	EXISTING PALM TREE TO BE DEMOLISHED
8	(E) WATER METER TO BE RELOCATED

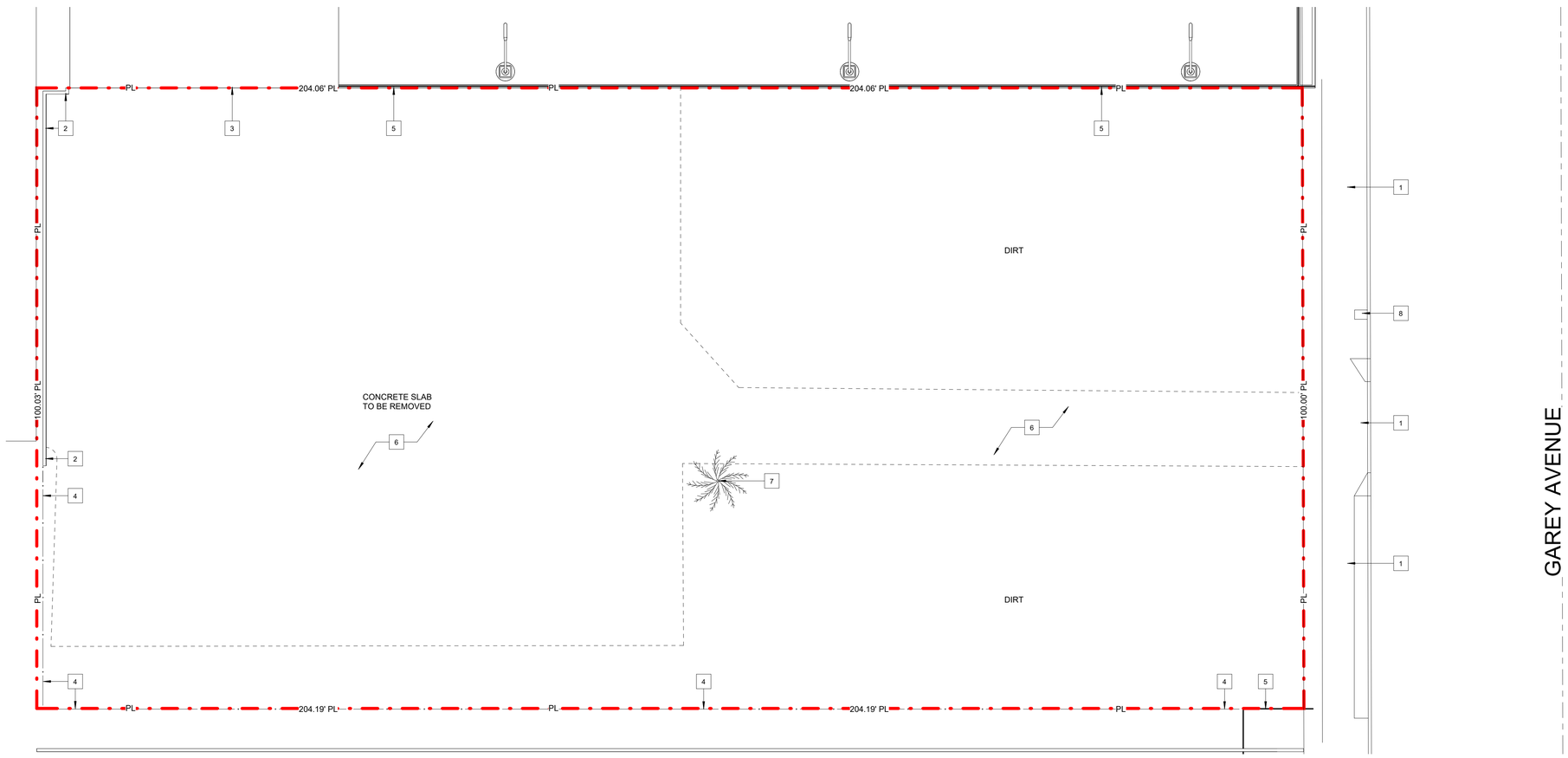

1 **SITE PLAN - DEMOLITION**
1" = 10'-0"

N

www.ULTRA-UNIT.com

Architect:
Ultra-Unit Architectural Studio
1327 Loma Avenue
Long Beach, California 90804
e. cameron@ultra-unit.com

Structural Engineer:
David Choi & Associates
1327 Loma Avenue
Long Beach, California 90804
e. david@dca-se.com

Owner:
Sarah Johnson
1377 N Garey Ave, LP
3982 S Figueroa St, Suite 209
Los Angeles CA, 90037
development@pathway2tomorrow.org

Architect Stamp

LICENSED ARCHITECT
CAMERON CROCKETT
C31503
1.31.2025
RENEWAL DATE
STATE OF CALIFORNIA

Date 10/7/2024

Project:
N GAREY AVE
1377 N GAREY AVE
POMONA, CA

Client Name: SOUTHLAND DEVELOPMENT CO. INC.

Revisions

No.	Description	Date

Sheet Name
SITEPLAN DEMOLITION

Sheet Number
051

Project Number	23-1025
Drawn By	GG
Checked By	CC
Scale	As indicated

C:\Users\User\Desktop\1377 N Garey Ave _ R24_DL_cams.rvt
7/16/2025 11:42:14 AM

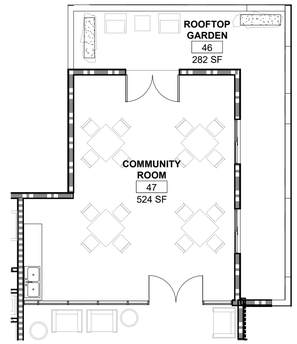

3 **LANDSCAPE PLAN - LEVEL 04**
1/8" = 1'-0"

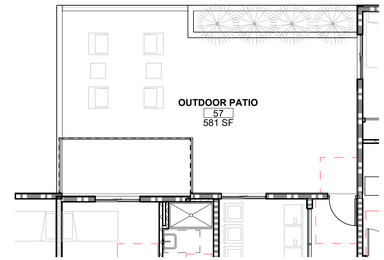

2 **LANDSCAPE PLAN - LEVEL 02**
1/8" = 1'-0"

LANDSCAPE NOTES

1. EXISTING SIDEWALK TO REMAIN, REPAIR AS REQUIRED. PROVIDE NEW CONCRETE AT DEMOLITION OF EXSITNG DRIVEWAY, PROVIDE CUT AT PROPOSED LANDSCAPE PER PLAN
2. EXISTING CMU FANCE TO REMAIN
3. EXISTING BUILDING WALL TO REMAIN
4. EXISTING CHAIN-LINK FENCE TO REMAIN
5. EXISTING WROUGHT IRON FENCE TO REMAIN
6. NEW DRIVEWAY
7. NEW 8'-0" TREE 15 GALLON CALIFORNIA SYCAMORE - PLATANUS RACEMOSA

LANDSCAPE LEGEND

- SITE CONCRETE BRUSHED FINISH
- SITE LANDSCAPE, DROUGHT TOLERANT PLANTS
- ASPHALT PAVING, 75,000 POUNDS LOAD CAPAVILITIES, SEE CIVIL
- NEW 8'-0" TREE 15 GALLON CALIFORNIA SYCAMORE - PLATANUS RACEMOSA
- SHRUBS / BUSHES SHALL BE WATER EFFICIENT / DROUGHT TOLERANT:
  DEER GRASS,
  WHITE SAGEBRUSH,
  WOOLLY BLUE CURLS,
  DESERT MILKWEED

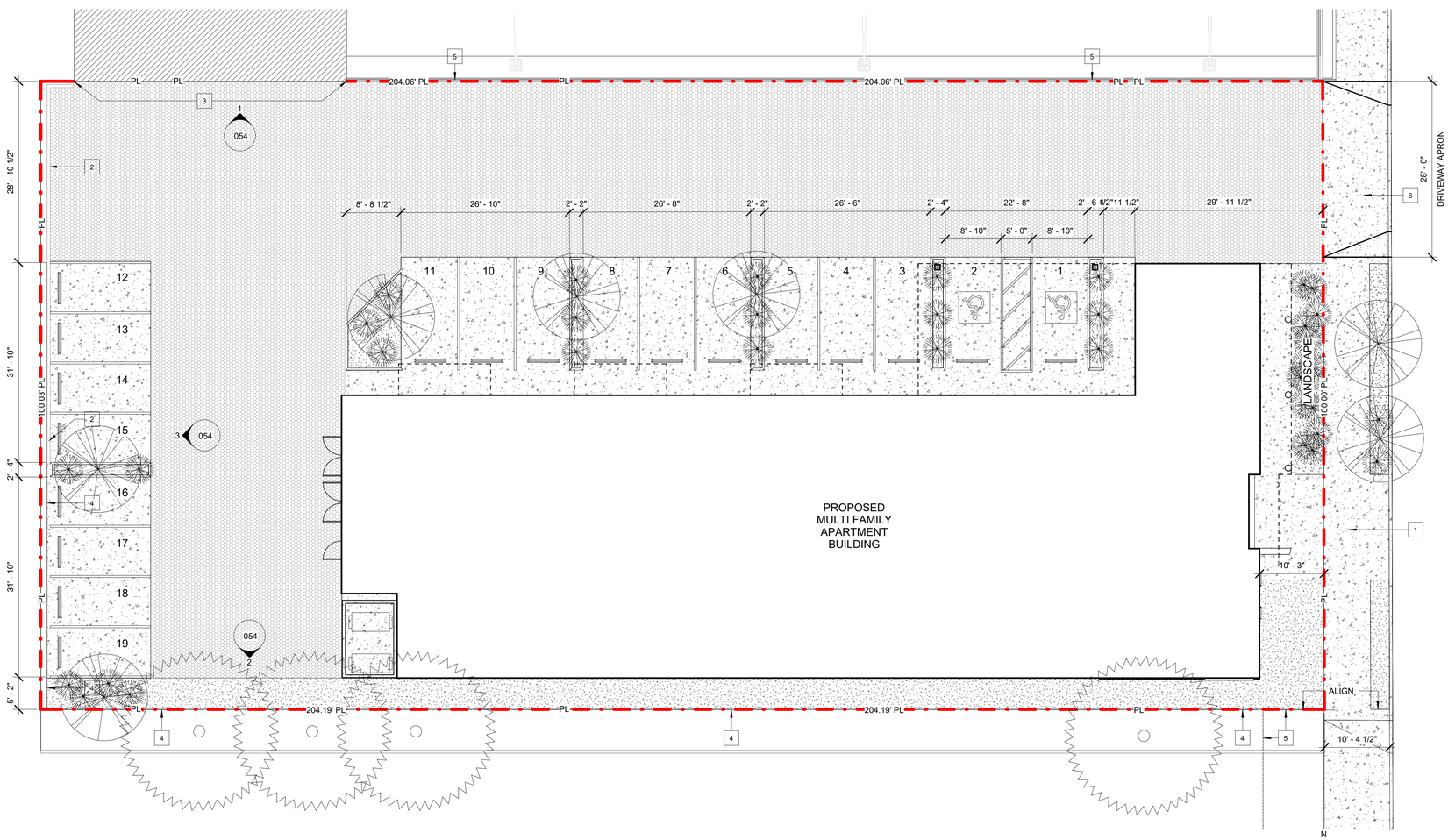

1 **LANDSCAPE & HARDSCAPE PLAN**
1" = 10'-0"

Architect:
Ultra-Unit Architectural Studio
1327 Loma Avenue
Long Beach, California 90804
e. cameron@ultra-unit.com

Structural Engineer:
David Choi & Associates
1327 Loma Avenue
Long Beach, California 90804
e. david@dca-se.com

Owner:
Sarah Johnson
1377 N Garey Ave, LP
3982 S Figueroa St, Suite 209
Los Angeles CA, 90037
development@pathway2tomorrow.org

www.ULTRA-UNIT.com

Architect Stamp

LICENSED ARCHITECT
CAMERON CROCKETT
C31503
1.31.2025
RENEWAL DATE
STATE OF CALIFORNIA

Date 10/7/2024

Project:
N GAREY AVE
1377 N GAREY AVE
POMONA, CA

Client Name: SOUTHLAND DEVELOPMENT CO. INC.

Revisions

No.	Description	Date

Sheet Name
LANDSCAPE PLAN

Sheet Number
052

Project Number	23-1025
Drawn By	GG
Checked By	CC
Scale	As indicated

C:\Users\User\Desktop\1377 N Garey Ave_ R24_DL_cams.rvt
7/16/2025 11:42:18 AM

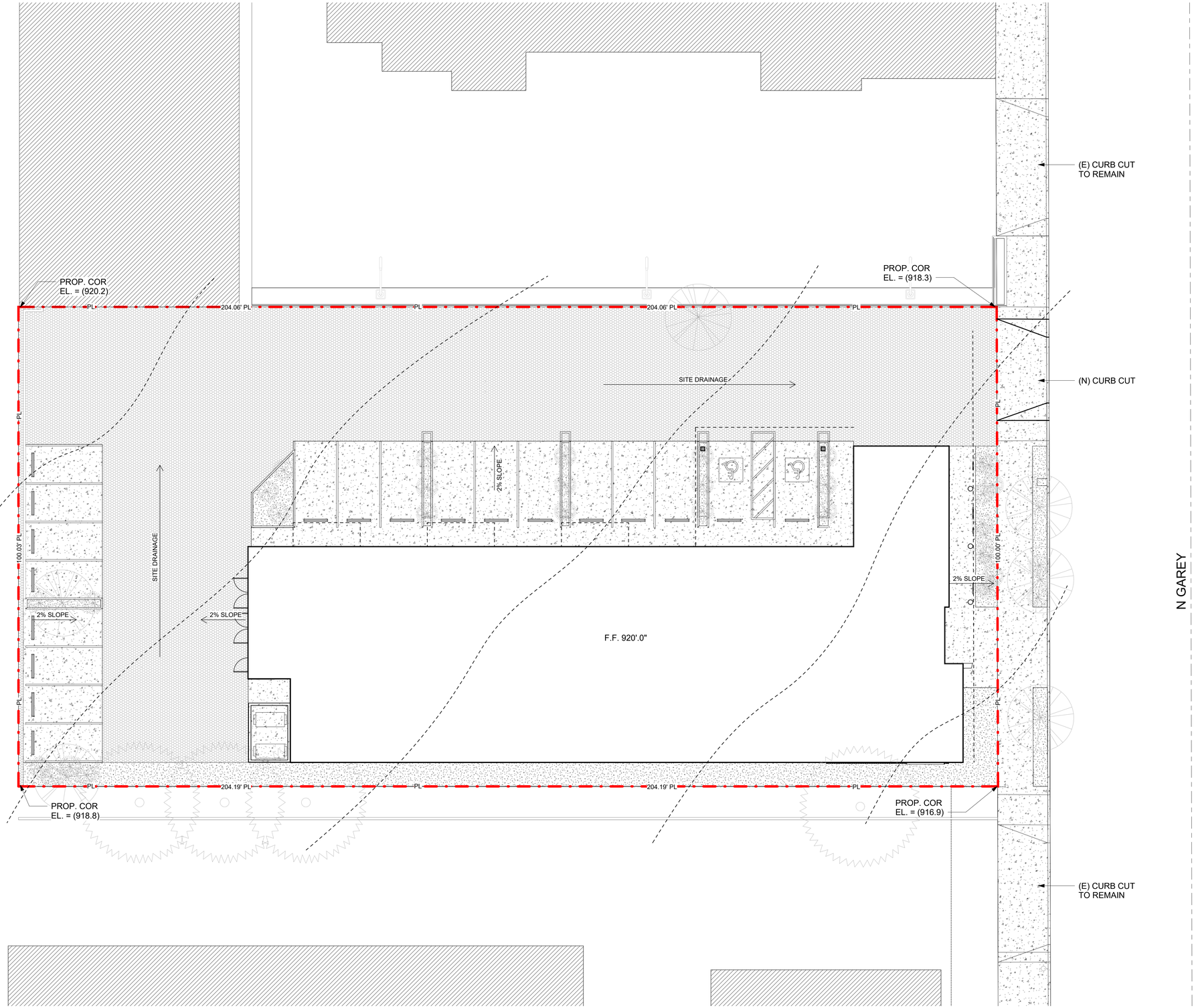

1 **GRADING SITEPLAN**
1" = 10'-0"

www.ULTRA-UNIT.com

Architect:
Ultra-Unit Architectural Studio
1327 Loma Avenue
Long Beach, California 90804
e. cameron@ultra-unit.com

Structural Engineer:
David Choi & Associates
1327 Loma Avenue
Long Beach, California 90804
e. david@dca-se.com

Owner:
Sarah Johnson
1377 N Garey Ave, LP
3982 S Figueroa St, Suite 209
Los Angeles CA, 90037
development@pathway2tomorrow.org

Architect Stamp

LICENSED ARCHITECT
CAMERON CROCKETT
C31503
1.31.2025
RENEWAL DATE
STATE OF CALIFORNIA

Date 10/7/2024

Project:
N GAREY AVE
1377 N GAREY AVE
POMONA, CA

Client Name:
SOUTHLAND DEVELOPMENT CO. INC.

Revisions

No.	Description	Date

Sheet Name
GRADING SITEPLAN

Sheet Number
053

Project Number	23-1025
Drawn By	GG
Checked By	CC
Scale	1" = 10'-0"

C:\Users\User\Desktop\1377 N Garey Ave _ R24_DL_cams.rvt
7/16/2025 11:42:21 AM

LANDSCAPE NOTES

1	EXISTING SIDEWALK TO REMAIN, REPAIR AS REQUIRED. PROVIDE NEW CONCRETE AT DEMOLITION OF EXSITNG DRIVEWAY, PROVIDE CUT AT PROPOSED LANDSCAPE PER PLAN
2	EXISTING CMU FANCE TO REMAIN
3	EXISTING BUILDING WALL TO REMAIN
4	EXISTING CHAIN-LINK FENCE TO REMAIN
5	EXISTING WROUGHT IRON FENCE TO REMAIN
6	NEW DRIVEWAY
7	NEW 8'-0" TREE 15 GALLON CALIFORNIA SYCAMORE - PLATANUS RACEMOSA

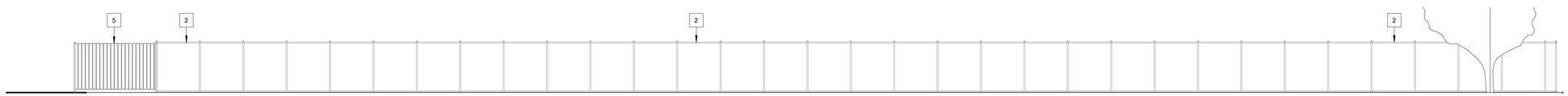

2 **ELEVATION - FENCE SOUTH**
1/8" = 1'-0"

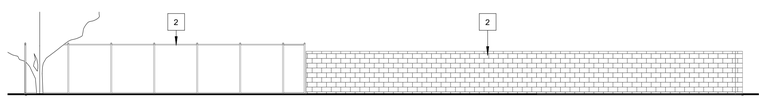

3 **ELEVATION - FENCE WEST**
1" = 10'-0"

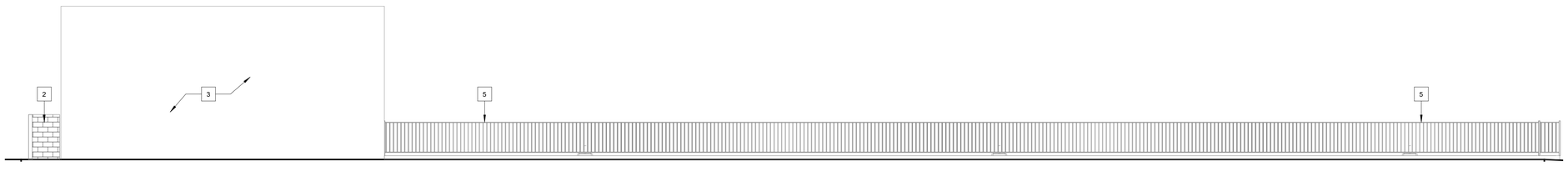

1 **ELEVATION - FENCE NORTH**
1/8" = 1'-0"

www.ULTRA-UNIT.com Architectural Studio

www.ULTRA-UNIT.com

Architect:
Ultra-Unit Architectural Studio
1327 Loma Avenue
Long Beach, California 90804
e. cameron@ultra-unit.com

Structural Engineer:
David Choi & Associates
1327 Loma Avenue
Long Beach, California 90804
e. david@dca-se.com

Owner:
Sarah Johnson
1377 N Garey Ave, LP
3982 S Figueroa St, Suite 209
Los Angeles CA, 90037
development@pathway2tomorrow.org

Architect Stamp

LICENSED ARCHITECT
CAMERON CROCKETT
C31503
1.31.2025
RENEWAL DATE
STATE OF CALIFORNIA

Date 10/7/2024

Project:
N GAREY AVE
1377 N GAREY AVE
POMONA, CA

Client Name:
SOUTHLAND DEVELOPMENT CO. INC.

Revisions

No.	Description	Date

Sheet Name
FENCE ELEVATIONS

Sheet Number
054

Project Number	23-1025
Drawn By	GG
Checked By	CC
Scale	As indicated

C:\Users\User\Desktop\1377 N Garey Ave _ R24_DL_cams.rvt
7/16/2025 11:42:23 AM

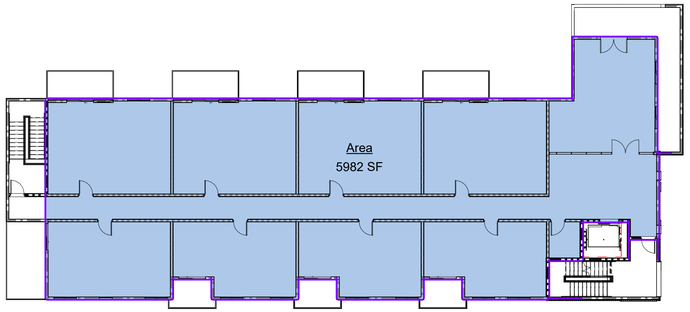

4 **LEVEL 4 - FAR**
1/16" = 1'-0"

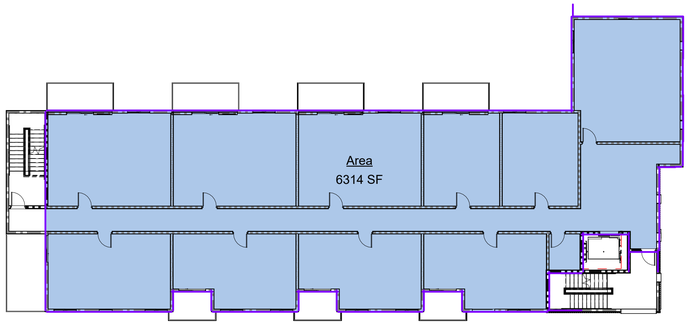

3 **LEVEL 3 - FAR**
1/16" = 1'-0"

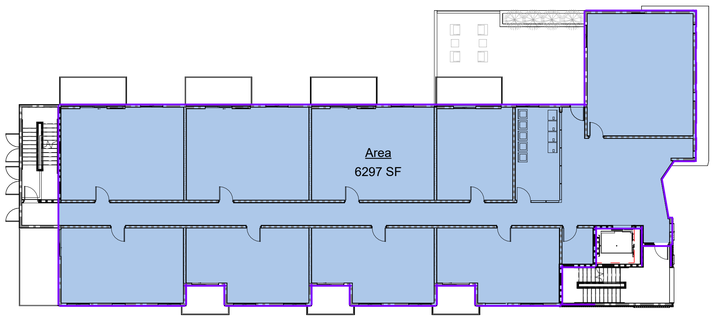

2 **LEVEL 2 - FAR**
1/16" = 1'-0"

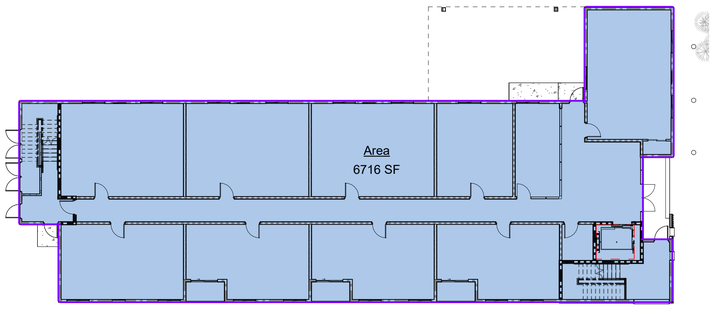

1 **LEVEL 1 - FAR**
1/16" = 1'-0"

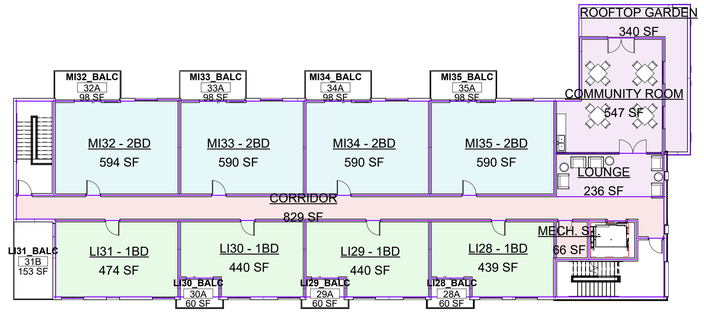

8 **LEVEL 4 - RENTABLE**
1/16" = 1'-0"

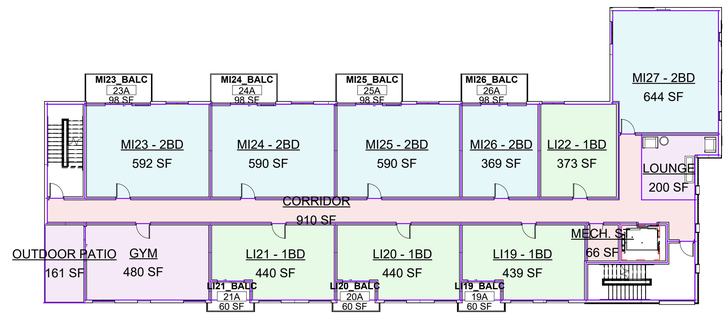

7 **LEVEL 3 - RENTABLE**
1/16" = 1'-0"

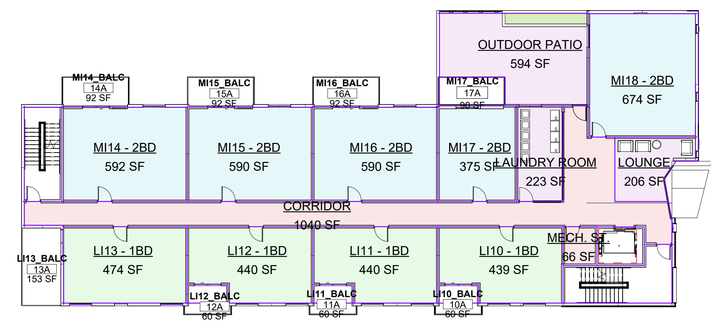

6 **LEVEL 2 - RENTABLE**
1/16" = 1'-0"

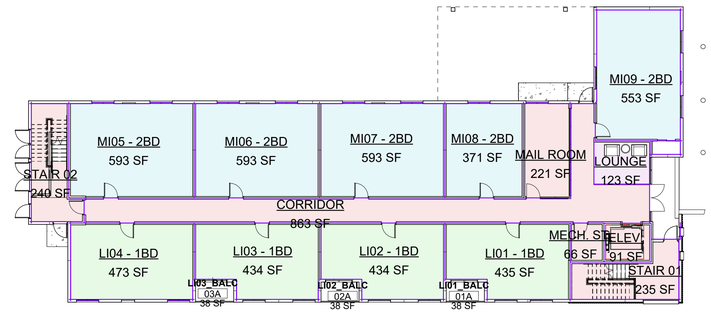

5 **LEVEL 1 - RENTABLE**
1/16" = 1'-0"

FAR	
LEVEL	AREA
LEVEL 1	6716 SF
LEVEL 2	6297 SF
LEVEL 3	6314 SF
LEVEL 4	5982 SF
	25309 SF

AREA SCHEDULE (PRIVATE OPEN AREA)

Level	Name	Area
LEVEL 1	LI01_BALC	38 SF
LEVEL 1	LI02_BALC	38 SF
LEVEL 1	LI03_BALC	38 SF
LEVEL 2	LI10_BALC	60 SF
LEVEL 2	LI11_BALC	60 SF
LEVEL 2	LI12_BALC	60 SF
LEVEL 2	LI13_BALC	153 SF
LEVEL 2	MI14_BALC	92 SF
LEVEL 2	MI15_BALC	92 SF
LEVEL 2	MI16_BALC	92 SF
LEVEL 2	MI17_BALC	90 SF
LEVEL 3	LI19_BALC	60 SF
LEVEL 3	LI20_BALC	60 SF
LEVEL 3	LI21_BALC	60 SF
LEVEL 3	MI23_BALC	98 SF
LEVEL 3	MI24_BALC	98 SF
LEVEL 3	MI25_BALC	98 SF
LEVEL 3	MI26_BALC	98 SF
LEVEL 4	LI28_BALC	60 SF
LEVEL 4	LI29_BALC	60 SF
LEVEL 4	LI30_BALC	60 SF
LEVEL 4	LI31_BALC	153 SF
LEVEL 4	MI32_BALC	98 SF
LEVEL 4	MI33_BALC	98 SF
LEVEL 4	MI34_BALC	98 SF
LEVEL 4	MI35_BALC	98 SF
		2107 SF

PRIVATE OPEN AREA REQUIRED: (60 SQ. FT. PER UNIT)
35 x 60 = 2,100 SQ. FT.

PRIVATE OPEN AREA PROVIDED:
2,107 SQ. FT.

AREA SCHEDULE (PUBLIC OPEN SPACE)

Level	Name	Area
LEVEL 1	LOUNGE	123 SF
LEVEL 2	LOUNGE	206 SF
LEVEL 2	LAUNDRY ROOM	223 SF
LEVEL 2	OUTDOOR PATIO	594 SF
LEVEL 3	LOUNGE	200 SF
LEVEL 3	GYM	480 SF
LEVEL 3	OUTDOOR PATIO	161 SF
LEVEL 4	LOUNGE	236 SF
LEVEL 4	COMMUNITY ROOM	547 SF
LEVEL 4	ROOFTOP GARDEN	340 SF
		3108 SF

PUBLIC OPEN AREA REQUIRED: (15% OF LOT AREA)
LOT AREA 20,424 x 15 = 3,064 SQ. FT.

PUBLIC OPEN AREA PROVIDED:
3,108 SQ. FT.

AREA SCHEDULE (RENTABLE)

Level	Name	Area
LEVEL 1	CORRIDOR	863 SF
LEVEL 1	ELEV.	91 SF
LEVEL 1	LI01 - 1BD	435 SF
LEVEL 1	LI02 - 1BD	434 SF
LEVEL 1	LI03 - 1BD	434 SF
LEVEL 1	LI04 - 1BD	473 SF
LEVEL 1	LOUNGE	123 SF
LEVEL 1	MAIL ROOM	221 SF
LEVEL 1	MECH. ST.	66 SF
LEVEL 1	MI05 - 2BD	593 SF
LEVEL 1	MI06 - 2BD	593 SF
LEVEL 1	MI07 - 2BD	593 SF
LEVEL 1	MI08 - 2BD	371 SF
LEVEL 1	MI09 - 2BD	553 SF
LEVEL 1	STAIR 01	235 SF
LEVEL 1	STAIR 02	240 SF
LEVEL 2	CORRIDOR	1040 SF
LEVEL 2	LAUNDRY ROOM	223 SF
LEVEL 2	LI10 - 1BD	439 SF
LEVEL 2	LI11 - 1BD	440 SF
LEVEL 2	LI12 - 1BD	440 SF
LEVEL 2	LI13 - 1BD	474 SF
LEVEL 2	LOUNGE	206 SF
LEVEL 2	MECH. ST.	66 SF
LEVEL 2	MI14 - 2BD	592 SF
LEVEL 2	MI15 - 2BD	590 SF
LEVEL 2	MI16 - 2BD	590 SF
LEVEL 2	MI17 - 2BD	375 SF
LEVEL 2	MI18 - 2BD	674 SF
LEVEL 2	OUTDOOR PATIO	594 SF
LEVEL 3	CORRIDOR	910 SF
LEVEL 3	GYM	480 SF
LEVEL 3	LI19 - 1BD	439 SF
LEVEL 3	LI20 - 1BD	440 SF
LEVEL 3	LI21 - 1BD	440 SF
LEVEL 3	LI22 - 1BD	373 SF
LEVEL 3	LOUNGE	200 SF
LEVEL 3	MECH. ST.	66 SF
LEVEL 3	MI23 - 2BD	592 SF
LEVEL 3	MI24 - 2BD	590 SF
LEVEL 3	MI25 - 2BD	590 SF
LEVEL 3	MI26 - 2BD	369 SF
LEVEL 3	MI27 - 2BD	644 SF
LEVEL 3	OUTDOOR PATIO	161 SF
LEVEL 4	COMMUNITY ROOM	547 SF
LEVEL 4	CORRIDOR	829 SF
LEVEL 4	LI28 - 1BD	439 SF
LEVEL 4	LI29 - 1BD	440 SF
LEVEL 4	LI30 - 1BD	440 SF
LEVEL 4	LI31 - 1BD	474 SF
LEVEL 4	LOUNGE	236 SF
LEVEL 4	MECH. ST.	66 SF
LEVEL 4	MI32 - 2BD	594 SF
LEVEL 4	MI33 - 2BD	590 SF
LEVEL 4	MI34 - 2BD	590 SF

www.ULTRA-UNIT.com

Architect:
Ultra-Unit Architectural Studio
1327 Loma Avenue
Long Beach, California 90804
e. cameron@ultra-unit.com

Structural Engineer:
David Choi & Associates
1327 Loma Avenue
Long Beach, California 90804
e. david@dca-se.com

Owner:
Sarah Johnson
1377 N Garey Ave, LP
3982 S Figueroa St, Suite 209
Los Angeles CA, 90037
development@pathway2tomorrow.org

Architect Stamp

LICENSED ARCHITECT
CAMERON CROCKETT
C31503
1.31.2025
RENEWAL DATE
STATE OF CALIFORNIA

Date 10/7/2024

Project:
N GAREY AVE
1377 N GAREY AVE
POMONA, CA

Client Name: SOUTHLAND DEVELOPMENT CO. INC.

Revisions

No.	Description	Date

Sheet Name
BUILDING AREA

Sheet Number
055

Project Number	23-1025
Drawn By	GG
Checked By	CC
Scale	1/16" = 1'-0"

C:\Users\User\Desktop\1377 N Garey Ave _ R24_DL_cams.rvt
7/16/2025 11:42:36 AM

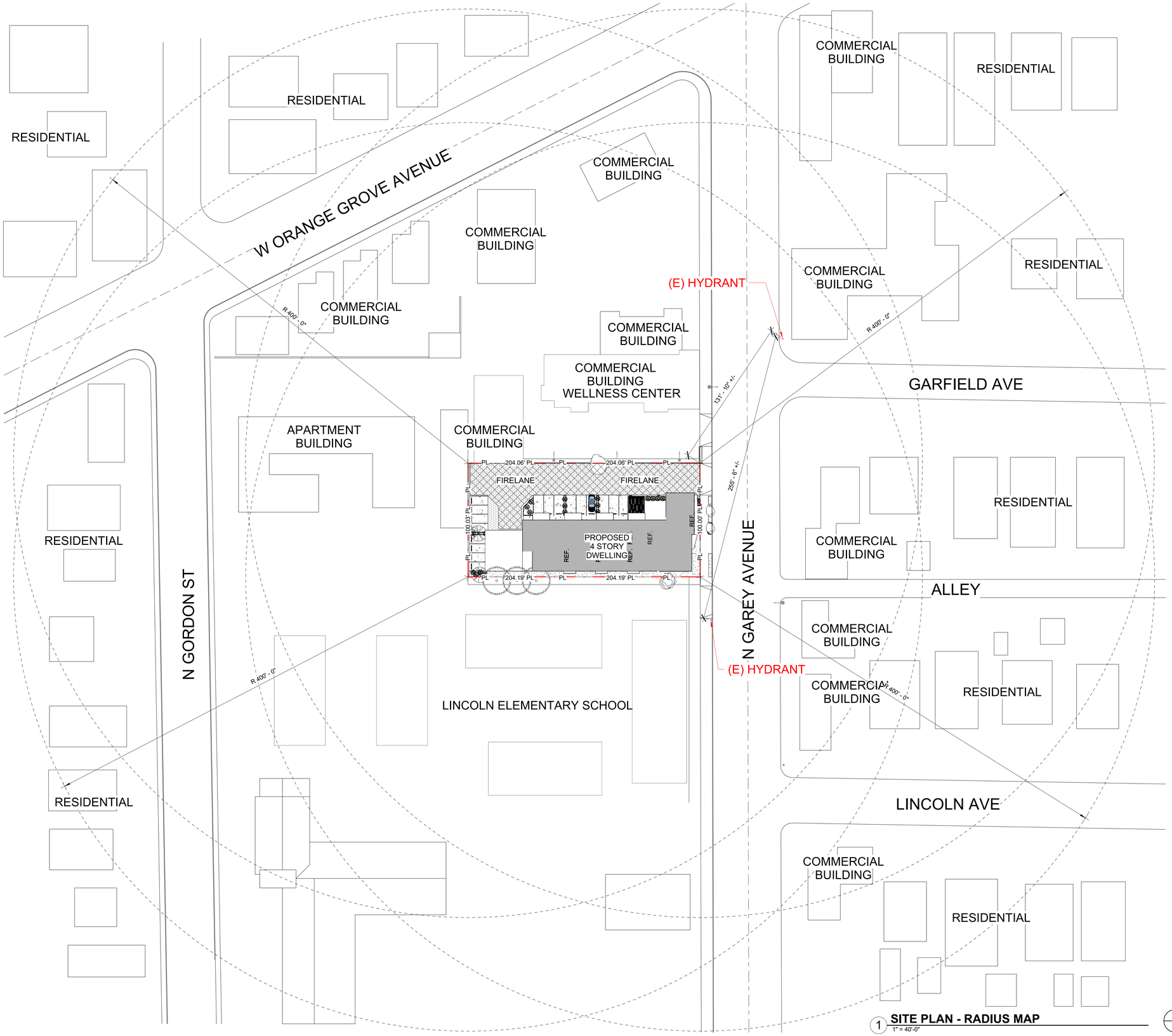

1 **SITE PLAN - RADIUS MAP**
1" = 40'-0"

www.ULTRA-UNIT.com

Architect:
Ultra-Unit Architectural Studio
1327 Loma Avenue
Long Beach, California 90804
e. cameron@ultra-unit.com

Structural Engineer:
David Choi & Associates
1327 Loma Avenue
Long Beach, California 90804
e. david@dca-se.com

Owner:
Sarah Johnson
1377 N Garey Ave, LP
3982 S Figueroa St, Suite 209
Los Angeles CA, 90037
development@pathway2tomorrow.org

Architect Stamp

LICENSED ARCHITECT
CAMERON CROCKETT
C31503
1.31.2025
RENEWAL DATE
STATE OF CALIFORNIA

Date 10/7/2024

Project:
N GAREY AVE
1377 N GAREY AVE
POMONA, CA

Client Name:
SOUTHLAND DEVELOPMENT CO. INC.

Revisions

No.	Description	Date

Sheet Name
SITE PLAN - RADIUS MAP

Sheet Number
056

Project Number	23-1025
Drawn By	GG
Checked By	CC
Scale	1" = 40'-0"

7/16/2025 11:42:41 AM C:\Users\User\Desktop\1377 N Garey Ave _ R24_DL_cams.rvt

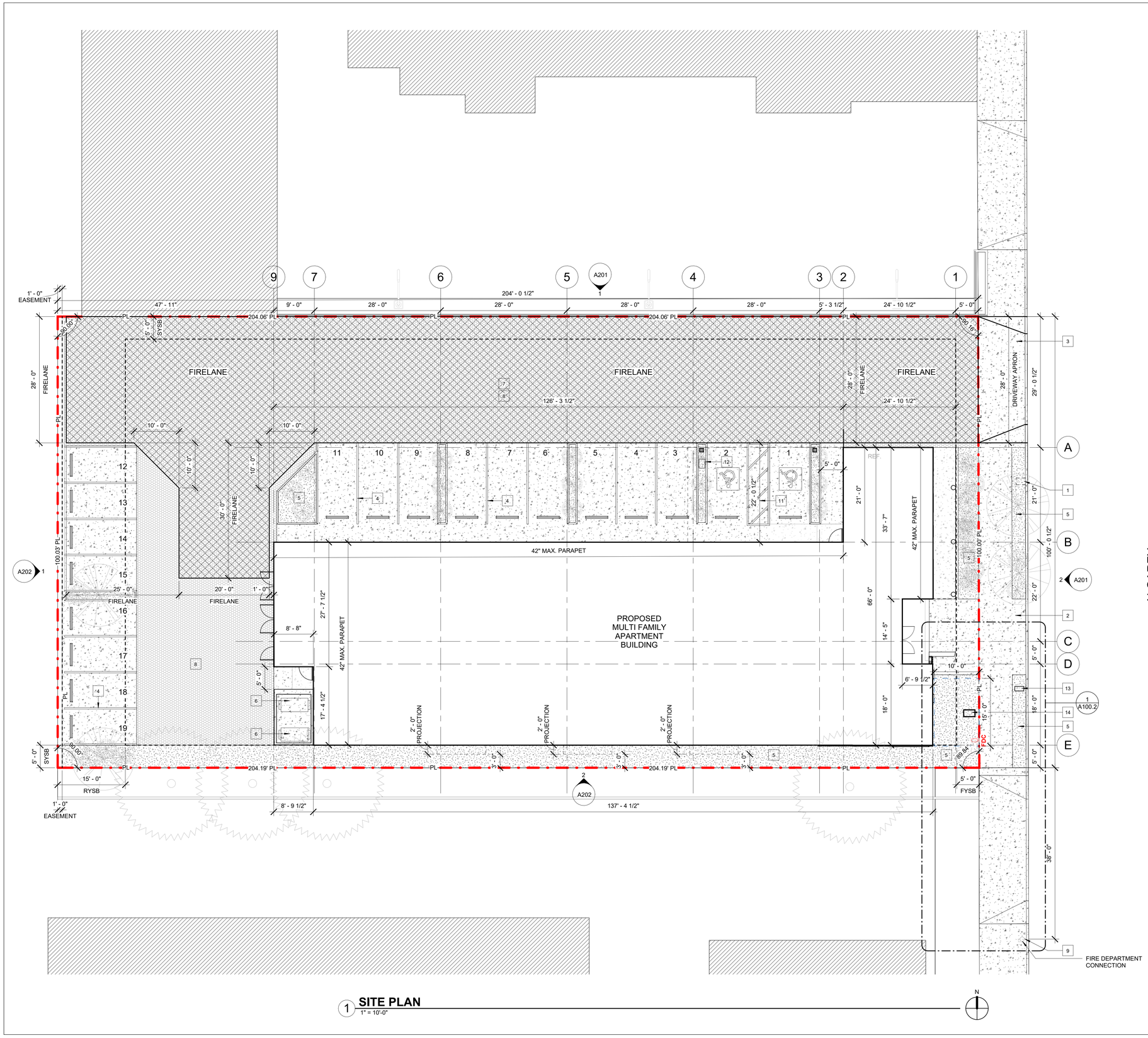

1 **SITE PLAN**
1" = 10'-0"

SITE NOTES

1. (E) WATER METER TO BE RELOCATED
2. (E) SIDEWALK
3. (N) DRIVEWAY
4. PARKING STRIPPING
5. PLANTER/LANDSCAPE
6. TRASH / RECYCLE
7. FIRELANE TURN AROUND
8. ASPHALT PAVING, 75,000 POUNDS LOAD CAPAVILITIES, SEE CIVIL
9. (E) FIRE HYDRANT
10. WHEEL STOP
11. ADA ACCESSIBLE AISLE, MAX 2% CROSS SLOPE
12. EV CHARGING STATION
13. NEW WATER METER FOR FIRE SPRINKLER
14. NEW WATER METER FOR DOMESTIC WATER

SITE PLAN LEGEND

- UNDER SEPARATE SUBMITIAL
- NEIGHBOR
- LIMIT OF CONSTRUCTION
- ABOVE FLOOR LINE
- CENTERLINE STREET
- PROPERTY LINE
- SITE CONCRETE BRUSHED FINISH
- SITE LANDSCAPE, DROUGHT TOLERANT PLANTS
- ASPHALT PAVING, 75,000 POUNDS LOAD CAPAVILITIES, SEE CIVIL
- FIRELANE ACCESS ROAD
- FDC — **FIRE DEPARTMENT CONNECTION** (Location coordinate with local fire department)
- STP — **STANDPIPE - CLASS I WET** (Location coordinate with local fire department)

NOTE:
PROVIDE ANTI-GRAFFITI FINISH AT THE FIRST 9', MEASURED FROM GRADE, AT EXTERIOR WALLS AND DOORS

PUBLIC FIRE FLOW REQUIREMENT:
THE REQUIRED FIRE FLOW FOR FIRE HYDRANTS AT THIS LOCATION IS 2250 GPM, AT 20 PSI RESIDUAL PRESSURE, FOR A DURATION OF 2 HOURS OVER AND ABOVE MAXIMUM DAILY DOMESTIC DEMAND. FIRE CODE 507.1.1 AND APPENDIX B

TYPE OF CONSTRUCTION PER THE BUILDING CODE TYPE VB
FIRE-FLOW CALCULATION AREA: AREA 26,256 SQ. FT.
FIRE FLOW BASE ON THE FIRE-FLOW CALCULATION AREA 4500 GPM
REDUCTION FOR FIRE SPRINKLERS (MAXIMUM 50%) 2250 GPM
TOTAL FIRE FLOW REQUIRED 2250 GPM

SITEPLAN NOTES

1. FIRE DEPARTMENT VEHICULAR ACCESS ROADS MUST BE INSTALLED IN A SERVICEABLE MANNER PRIOR TO AND DURING THE TIME OF CONSTRUCTION. FIRE CODE 503.1.1

2. PROVIDE APPROVED SIGNS OR OTHER APPROVED NOTICES OR MARKINGS THAT INCLUDE THE WORDS NO PARKING - FIRE LANE. SIGNS SHALL HAVE A MINIMUM DIMENSION OF 12 INCHES WIDE BY 18 INCHES HIGH AND HAVE RED LETTERS ON A WHITE REFLECTIVE BACKGROUND. SIGNS SHALL BE PROVIDED FOR FIRE APPARATUS ACCESS ROAD, TO CLEARLY INDICATE THE ENTRANCE TO SUCH ROAD, OR PROHIBIT THE OBSTRUCTION THEREOF AND INTERVALS, AS REQUIRED BY THE FIRE INSPECTOR. FIRE CODE 503.3

3. FIRE APPARATUS ACCESS ROADS SHALL BE IDENTIFIED WITH APPROVED SIGNS. TEMPORARY SIGNS BE INSTALLED AT EACH STREET INTERSECTION WHEN CONSTRUCTION OF NEW ROADWAYS ALLOWS PASSAGE BY VEHICLES. SIGNS SHALL BE OF AN APPROVED SIZE, WEATHER RESISTANT AND BE MAINTAINCED UNTIL REPLACED BY PERMANENT SIGNS. FIRE CODE 505.2

4. ALL FIRE HYDRANTS SHALL MEASURE 6" x 4" x 2-1/2", BRASS OR BRONZE, CONFORMING TO AMERICAN WATER WORKS ASSOCIATION STANDARD C503, OR APPROVED EQUAL

5. ALL REQUIRED PUBLIC FIRE HYDRANTS SHALL BE INSTALLED, TESTED AND ACCEPTED PRIOR TO BEGINNING CONSTRUCTION, FIRE CODE 501.4

6. ALL ON-SITE FIRE HYDRANTS SHALL BE INSTALLED, TESTED AND APPROVED PRIOR TO BUILIDING OCCUPANCY. FIRE CODE 501.3 AND 901.5.1

7. A MANUAL FIRE ALARM SYSTEM THAT ACTIVATES THE OCCUPANT NOTIFICATION SYSTEM IN ACCORDANCE WITH SECTION 907.5 SHALL BE INSTALLED IN GROUP R-2 OCCUPANCIES WHERE: 1. ANY DWELLING UNIT OR SLEEPING UNIT IS LOCATED THREE OR MORE STORIES ABOVE THE LOWEST LEVEL OF EXIT DISCHARGE; 2. ANY DWELLING UNIT OR SLEEPING UNIT IS LOCATED MORE THAN ONE STORY BELOW THE HIGHEST LEVEL OF EXIT DISCHARGE OF EXITS SERVING THE DWELLING UNIT OR SLEEPING UNIT; 3. THE BUILDING CONTAINS MORE THAN 16 DWELLING UNITS OR SLEEPING UNITS; 4. CONGREGATE LIVING FACILITIES OR CONGREGATE RESIDENCES WITH MORE THAN 16 OCCUPANTS. BUILDING CODE 907.2.9.1

8. WHERE MORE THAN ONE SMOKE ALARM IS REQUIRED TO BE INSTALLED WITHIN AN INDIVIDUAL DWELLING UNIT OR SLEEPING UNIT IN GROUP R OCCUPANCIES, THE SMOKE ALARMS SHALL BE INTERCONNECTED IN SUCH A MANNER THAT THE ACTIVATION OF ONE ALARM WILL ACTIVATE ALL OF THE ALARMS IN THE INDIVIDUAL UNIT. BUILDING CODE 907.2.11.5

9. IN NEW CONSTRUCTION, REQUIRED SMOKE ALARMS SHALL RECEIVE THEIR PRIMARY POWER FROM THE BUILDING WIRING WHERE SUCH WIRING IS SERVED FROM A COMMERCIAL SOURCE AND SHALL BE EQUIPPED WITH A BATTERY BACKUP. SMOKE ALARMS WITH INTEGRAL STROBES THAT ARE NOT EQUIPPED WITH BATTERY BACKUP SHALL BE CONNECTED TO AN EMERGENCY ELECTRICAL SYSTEM. SMOKE ALARMS SHALL EMIT A SIGNAL WHEN THE BATTERIES ARE LOW. WIRING SHALL BE PERMANENT AND WITHOUT A DISCONNECTING SWITCH OTHER THAN AS REQUIRED FOR OVERCURRENT PROTECTION. BUILDING CODE 907.2.11.6

www.ULTRA-UNIT.com Architectural Studio

www.ULTRA-UNIT.com

Architect:
Ultra-Unit Architectural Studio
1327 Loma Avenue
Long Beach, California 90804
e. cameron@ultra-unit.com

Structural Engineer:
David Choi & Associates
1327 Loma Avenue
Long Beach, California 90804
e. david@dca-se.com

Owner:
Sarah Johnson
1377 N Garey Ave, LP
3982 S Figueroa St, Suite 209
Los Angeles CA, 90037
development@pathway2tomorrow.org

Architect Stamp

LICENSED ARCHITECT
CAMERON CROCKETT
C31503
1.31.2025
RENEWAL DATE
STATE OF CALIFORNIA

Date 10/7/2024

Project: **N GAREY AVE**
1377 N GAREY AVE
POMONA, CA

Client Name: SOUTHLAND DEVELOPMENT CO. INC.

Revisions

No.	Description	Date

Sheet Name: SITE PLAN

Sheet Number: **A100.1**

Project Number	23-1025
Drawn By	GG
Checked By	CC
Scale	As indicated

7/16/2025 11:42:43 AM C:\Users\User\Desktop\1377 N Garey Ave _ R24_DL_cams.rvt

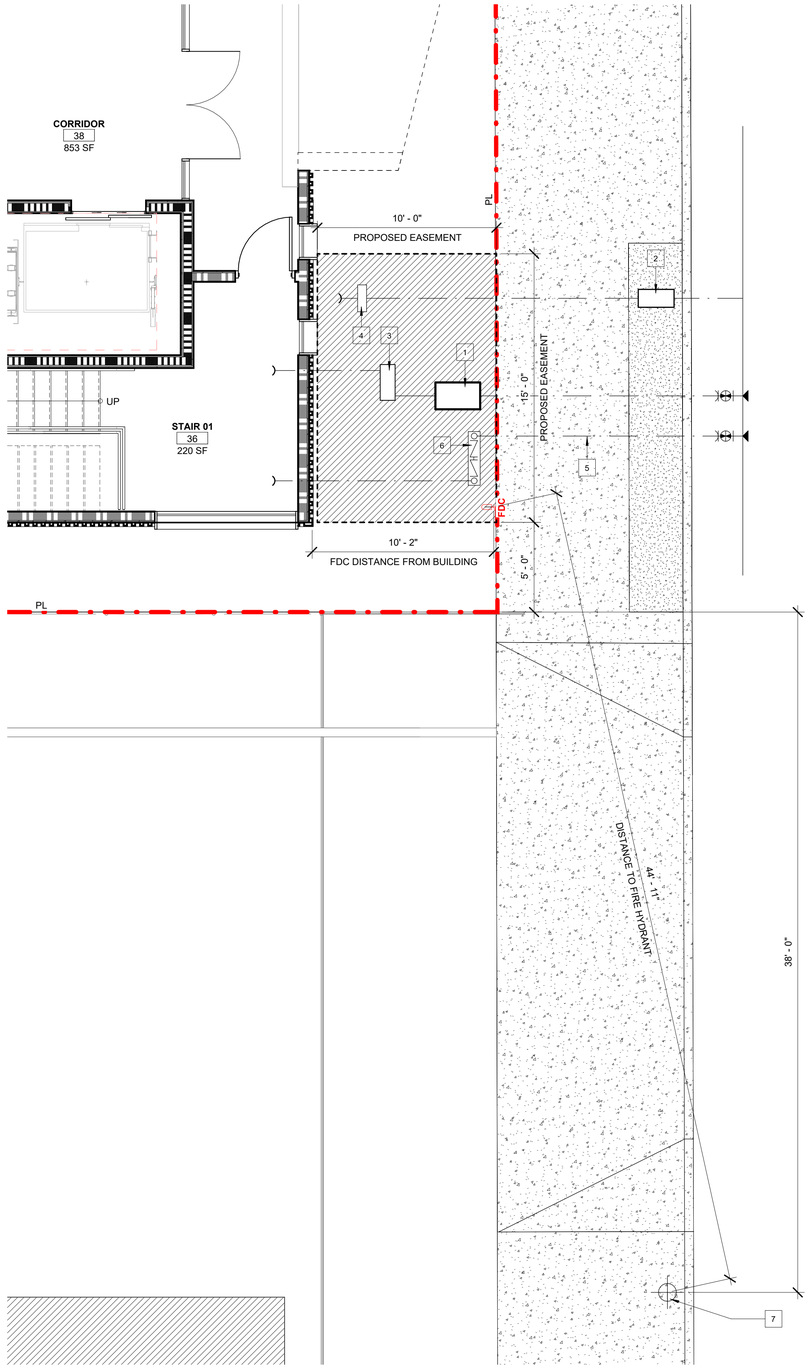

1 **SERVICE EASEMENT PLAN**
1/4" = 1'-0"

SERVICE EASEMENT NOTES

1	2" DOMESTIC WATER METER
2	3/4" LANDSCPE IRRIGATION METER
3	PRESSURE REGULATOR BACK FLOW PREVENTER
4	IRRIGATION CENTER
5	FIRE SPRINKLER SERVICE (2")
6	SPRINKLER STANPIPE
7	EXISTING FIRE HYDRANT LOCATION

WALL ASSEMBLIES

SEE A700 FOR EXTERIOR WALL ASSEMBLIES

EXT 1: 2 X 6 EXTERIOR WALL,W/ STUCCO, 1HR, STC50

SEE A701 FOR INTERIOR WALL ASSEMBLIES

INT 1: PARTY WALL, 2X STGR STUD, 1HR, STC50+

INT 2: 2 X 4 INTERIOR PARTITION WALL, NR

INT 3: 2 X 6 WOOD STUD, STC 50, 1HR

INT 4: 2 X 6 WOOD STUD, STC 63, 2 HR FIRE BARRIER

INT 5: 2 X 6 PLUMBING WALL

INT 6: 2HR SHAFT WALL

S — CEILING MOUNTED SMOKE ALARM
ELECTRICAL POWER WITH BATTERY BACKUP
PER BUILDING CODE 907.2.11.2

FDC — **FIRE DEPARTMENT CONNECTION**
(Location coordinate with local fire department)

STP — **STANDPIPE - CLASS I WET**
(Location coordinate with local fire department)

www.ULTRA-UNIT.com

Architect:
Ultra-Unit Architectural Studio
1327 Loma Avenue
Long Beach, California 90804
e. cameron@ultra-unit.com

Structural Engineer:
David Choi & Associates
1327 Loma Avenue
Long Beach, California 90804
e. david@dca-se.com

Owner:
Sarah Johnson
1377 N Garey Ave, LP
3982 S Figueroa St, Suite 209
Los Angeles CA, 90037
development@pathway2tomorrow.org

Architect Stamp

LICENSED ARCHITECT
CAMERON CROCKETT
C31503
1.31.2025
RENEWAL DATE
STATE OF CALIFORNIA

Date 10/7/2024

Project:
N GAREY AVE
1377 N GAREY AVE
POMONA, CA

Client Name:
SOUTHLAND DEVELOPMENT CO. INC.

Revisions

No.	Description	Date

Sheet Name
ENLARGED PLAN - SERVICE EASEMENT

Sheet Number
A100.2

Project Number	23-1025
Drawn By	GG
Checked By	CC
Scale	1/4" = 1'-0"

C:\Users\User\Desktop\1377 N Garey Ave _ R24_DL_cams.rvt
7/16/2025 11:42:44 AM

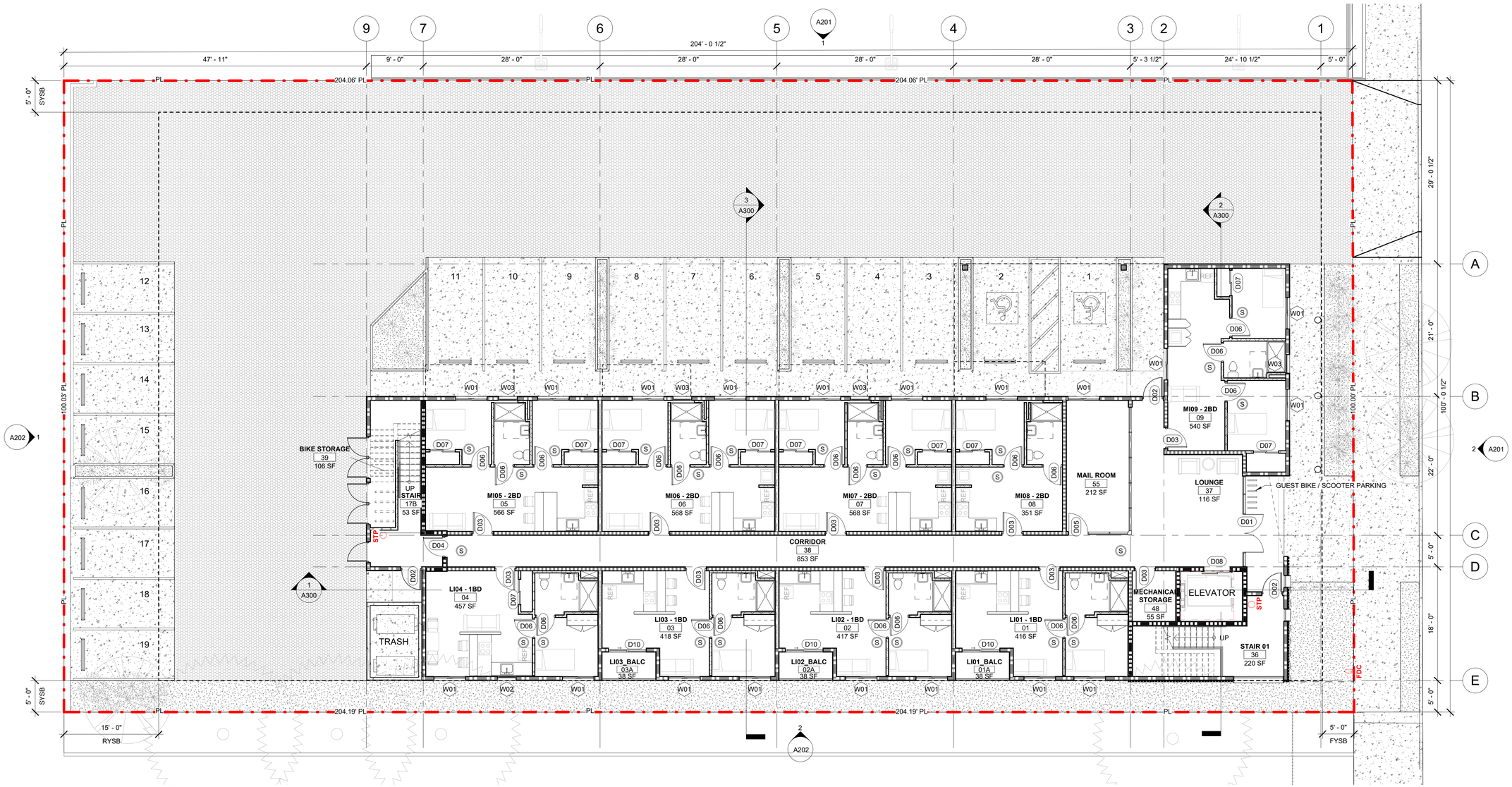

1 FLOOR PLAN - LEVEL 01

1/8" = 1'-0"

N

ROOM SCHEDULE - LEVEL 1			
Level	Number	Name	Area
LEVEL 1	01	LI01 - 1BD	416 SF
LEVEL 1	02	LI02 - 1BD	417 SF
LEVEL 1	03	LI03 - 1BD	418 SF
LEVEL 1	04	LI04 - 1BD	457 SF
LEVEL 1	05	MI05 - 2BD	566 SF
LEVEL 1	06	MI06 - 2BD	568 SF
LEVEL 1	07	MI07 - 2BD	568 SF
LEVEL 1	08	MI08 - 2BD	351 SF
LEVEL 1	09	MI09 - 2BD	540 SF
LEVEL 1	37	LOUNGE	116 SF
LEVEL 1	38	CORRIDOR	853 SF
LEVEL 1	36	STAIR 01	220 SF
LEVEL 1	39	BIKE STORAGE	106 SF
LEVEL 1	48	MECHANICAL STORAGE	55 SF
LEVEL 1	55	MAIL ROOM	212 SF
LEVEL 1	01A	LI01_BALC	38 SF
LEVEL 1	02A	LI02_BALC	38 SF
LEVEL 1	03A	LI03_BALC	38 SF
LEVEL 1	17B	STAIR	53 SF

Grand total: 19

WALL ASSEMBLIES

SEE A700 FOR EXTERIOR WALL ASSEMBLIES

EXT 1: 2 X 6 EXTERIOR WALL,W/ STUCCO, 1HR, STC50

SEE A701 FOR INTERIOR WALL ASSEMBLIES

INT 1: PARTY WALL, 2X STGR STUD, 1HR, STC50+

INT 2: 2 X 4 INTERIOR PARTITION WALL, NR

INT 3: 2 X 6 WOOD STUD, STC 50, 1HR

INT 4: 2 X 6 WOOD STUD, STC 63, 2 HR FIRE BARRIER

INT 5: 2 X 6 PLUMBING WALL

INT 6: 2HR SHAFT WALL

S — CEILING MOUNTED SMOKE ALARM
ELECTRICAL POWER WITH BATTERY BACKUP
PER BUILDING CODE 907.2.11.2

FDC — **FIRE DEPARTMENT CONNECTION**
(Location coordinate with local fire department)

STP — **STANDPIPE - CLASS I WET**
(Location coordinate with local fire department)

www.ULTRA-UNIT.com
Architectural Studio

www.ULTRA-UNIT.com

Architect:
Ultra-Unit Architectural Studio
1327 Loma Avenue
Long Beach, California 90804
e. cameron@ultra-unit.com

Structural Engineer:
David Choi & Associates
1327 Loma Avenue
Long Beach, California 90804
e. david@dca-se.com

Owner:
Sarah Johnson
1377 N Garey Ave, LP
3982 S Figueroa St, Suite 209
Los Angeles CA, 90037
development@pathway2tomorrow.org

Architect Stamp

LICENSED ARCHITECT
CAMERON CROCKETT
C31503
1.31.2025
RENEWAL DATE
STATE OF CALIFORNIA

Date 10/7/2024

Project:
N GAREY AVE
1377 N GAREY AVE
POMONA, CA

Client Name:
SOUTHLAND DEVELOPMENT CO. INC.

Revisions

No.	Description	Date

Sheet Name
FLOOR PLAN - LEVEL 01

Sheet Number
A101

Project Number	23-1025
Drawn By	GG
Checked By	CC
Scale	As indicated

7/16/2025 11:42:47 AM C:\Users\User\Desktop\1377 N Garey Ave _ R24_DL_cams.rvt

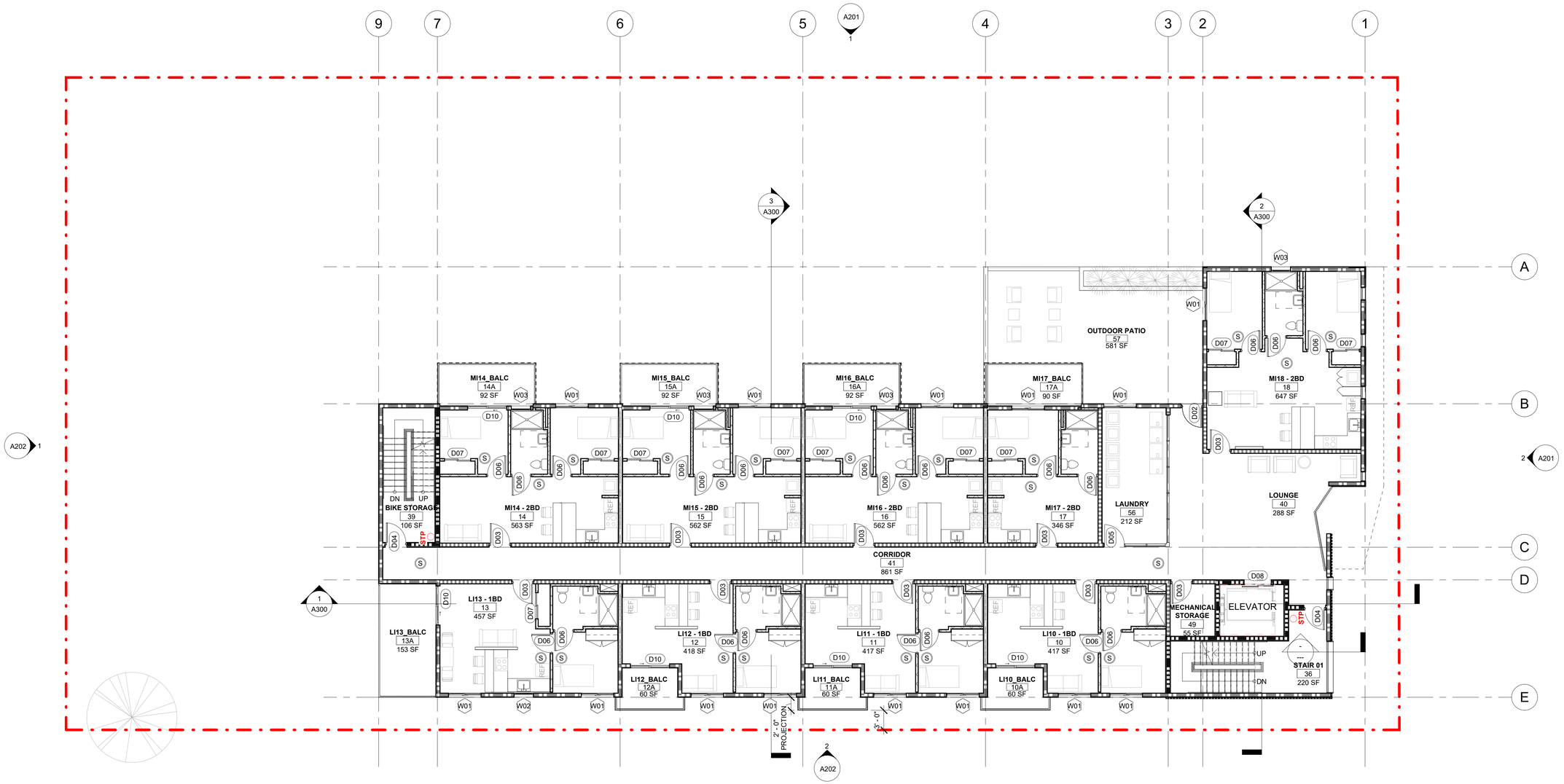

ROOM SCHEDULE - LEVEL 2			
Level	Number	Name	Area
LEVEL 2	10	LI10 - 1BD	417 SF
LEVEL 2	10A	LI10_BALC	60 SF
LEVEL 2	11	LI11 - 1BD	417 SF
LEVEL 2	11A	LI11_BALC	60 SF
LEVEL 2	12	LI12 - 1BD	418 SF
LEVEL 2	12A	LI12_BALC	60 SF
LEVEL 2	13	LI13 - 1BD	457 SF
LEVEL 2	13A	LI13_BALC	153 SF
LEVEL 2	14	MI14 - 2BD	563 SF
LEVEL 2	14A	MI14_BALC	92 SF
LEVEL 2	15	MI15 - 2BD	562 SF
LEVEL 2	15A	MI15_BALC	92 SF
LEVEL 2	16	MI16 - 2BD	562 SF
LEVEL 2	16A	MI16_BALC	92 SF
LEVEL 2	17	MI17 - 2BD	346 SF
LEVEL 2	17A	MI17_BALC	90 SF
LEVEL 2	18	MI18 - 2BD	647 SF
LEVEL 2	40	LOUNGE	288 SF
LEVEL 2	41	CORRIDOR	861 SF
LEVEL 2	49	MECHANICAL STORAGE	55 SF
LEVEL 2	56	LAUNDRY	212 SF
LEVEL 2	57	OUTDOOR PATIO	581 SF

Grand total: 22

1 FLOOR PLAN - LEVEL 02

1/8" = 1'-0"

N

WALL ASSEMBLIES

SEE A700 FOR EXTERIOR WALL ASSEMBLIES

EXT 1: 2 X 6 EXTERIOR WALL,W/ STUCCO, 1HR, STC50

SEE A701 FOR INTERIOR WALL ASSEMBLIES

INT 1: PARTY WALL, 2X STGR STUD, 1HR, STC50+

INT 2: 2 X 4 INTERIOR PARTITION WALL, NR

INT 3: 2 X 6 WOOD STUD, STC 50, 1HR

INT 4: 2 X 6 WOOD STUD, STC 63, 2 HR FIRE BARRIER

INT 5: 2 X 6 PLUMBING WALL

INT 6: 2HR SHAFT WALL

S — CEILING MOUNTED SMOKE ALARM ELECTRICAL POWER WITH BATTERY BACKUP PER BUILDING CODE 907.2.11.2

FDC — **FIRE DEPARTMENT CONNECTION** (Location coordinate with local fire department)

STP — **STANDPIPE - CLASS I WET** (Location coordinate with local fire department)

www.ULTRA-UNIT.com

Architect:
Ultra-Unit Architectural Studio
1327 Loma Avenue
Long Beach, California 90804
e. cameron@ultra-unit.com

Structural Engineer:
David Choi & Associates
1327 Loma Avenue
Long Beach, California 90804
e. david@dca-se.com

Owner:
Sarah Johnson
1377 N Garey Ave, LP
3982 S Figueroa St, Suite 209
Los Angeles CA, 90037
development@pathway2tomorrow.org

Architect Stamp

LICENSED ARCHITECT
CAMERON CROCKETT
C31503
1.31.2025
RENEWAL DATE
STATE OF CALIFORNIA

Date 10/7/2024

Project:
N GAREY AVE
1377 N GAREY AVE
POMONA, CA

Client Name:
SOUTHLAND DEVELOPMENT CO. INC.

Revisions

No.	Description	Date

Sheet Name
FLOOR PLAN - LEVEL 02

Sheet Number
A102

Project Number	23-1025
Drawn By	GG
Checked By	CC
Scale	As indicated

C:\Users\User\Desktop\1377 N Garey Ave _ R24_DL_cams.rvt

7/16/2025 11:42:48 AM

ROOM SCHEDULE - LEVEL 3			
Level	Number	Name	Area
LEVEL 3	19	LI19 - 1BD	417 SF
LEVEL 3	19A	LI19_BALC	60 SF
LEVEL 3	20	LI20 - 1BD	417 SF
LEVEL 3	20A	LI20_BALC	60 SF
LEVEL 3	21	LI21 - 1BD	418 SF
LEVEL 3	21A	LI21_BALC	60 SF
LEVEL 3	22	LI22 - 1BD	350 SF
LEVEL 3	22A	GYM_BALC	153 SF
LEVEL 3	23	MI23 - 2BD	563 SF
LEVEL 3	23A	MI23_BALC	98 SF
LEVEL 3	24	MI24 - 2BD	562 SF
LEVEL 3	24A	MI24_BALC	98 SF
LEVEL 3	25	MI25 - 2BD	562 SF
LEVEL 3	25A	MI25_BALC	98 SF
LEVEL 3	26	MI26 - 2BD	345 SF
LEVEL 3	26A	MI26_BALC	98 SF
LEVEL 3	27	MI27 - 2BD	634 SF
LEVEL 3	42	LOUNGE	194 SF
LEVEL 3	43	CORRIDOR	818 SF
LEVEL 3	50	MECHANICAL STORAGE	55 SF
LEVEL 3	66	GYM	457 SF

Grand total: 21

1 FLOOR PLAN - LEVEL 03

1/8" = 1'-0"

N

WALL ASSEMBLIES

SEE A700 FOR EXTERIOR WALL ASSEMBLIES

EXT 1: 2 X 6 EXTERIOR WALL,W/ STUCCO, 1HR, STC50

SEE A701 FOR INTERIOR WALL ASSEMBLIES

INT 1: PARTY WALL, 2X STGR STUD, 1HR, STC50+

INT 2: 2 X 4 INTERIOR PARTITION WALL, NR

INT 3: 2 X 6 WOOD STUD, STC 50, 1HR

INT 4: 2 X 6 WOOD STUD, STC 63, 2 HR FIRE BARRIER

INT 5: 2 X 6 PLUMBING WALL

INT 6: 2HR SHAFT WALL

S — CEILING MOUNTED SMOKE ALARM
ELECTRICAL POWER WITH BATTERY BACKUP
PER BUILDING CODE 907.2.11.2

FDC — **FIRE DEPARTMENT CONNECTION**
(Location coordinate with local fire department)

STP — **STANDPIPE - CLASS I WET**
(Location coordinate with local fire department)

www.ULTRA-UNIT.com
Architectural Studio

www.ULTRA-UNIT.com

Architect:
Ultra-Unit Architectural Studio
1327 Loma Avenue
Long Beach, California 90804
e. cameron@ultra-unit.com

Structural Engineer:
David Choi & Associates
1327 Loma Avenue
Long Beach, California 90804
e. david@dca-se.com

Owner:
Sarah Johnson
1377 N Garey Ave, LP
3982 S Figueroa St, Suite 209
Los Angeles CA, 90037
development@pathway2tomorrow.org

Architect Stamp

LICENSED ARCHITECT
CAMERON CROCKETT
C31503
1.31.2025
RENEWAL DATE
STATE OF CALIFORNIA

Date 10/7/2024

Project:
N GAREY AVE
1377 N GAREY AVE
POMONA, CA

Client Name:
SOUTHLAND DEVELOPMENT CO. INC.

Revisions

No.	Description	Date

Sheet Name
FLOOR PLAN - LEVEL 03

Sheet Number
A103

Project Number	23-1025
Drawn By	GG
Checked By	CC
Scale	As indicated

C:\Users\User\Desktop\1377 N Garey Ave _ R24_DL_cams.rvt
7/16/2025 11:42:50 AM

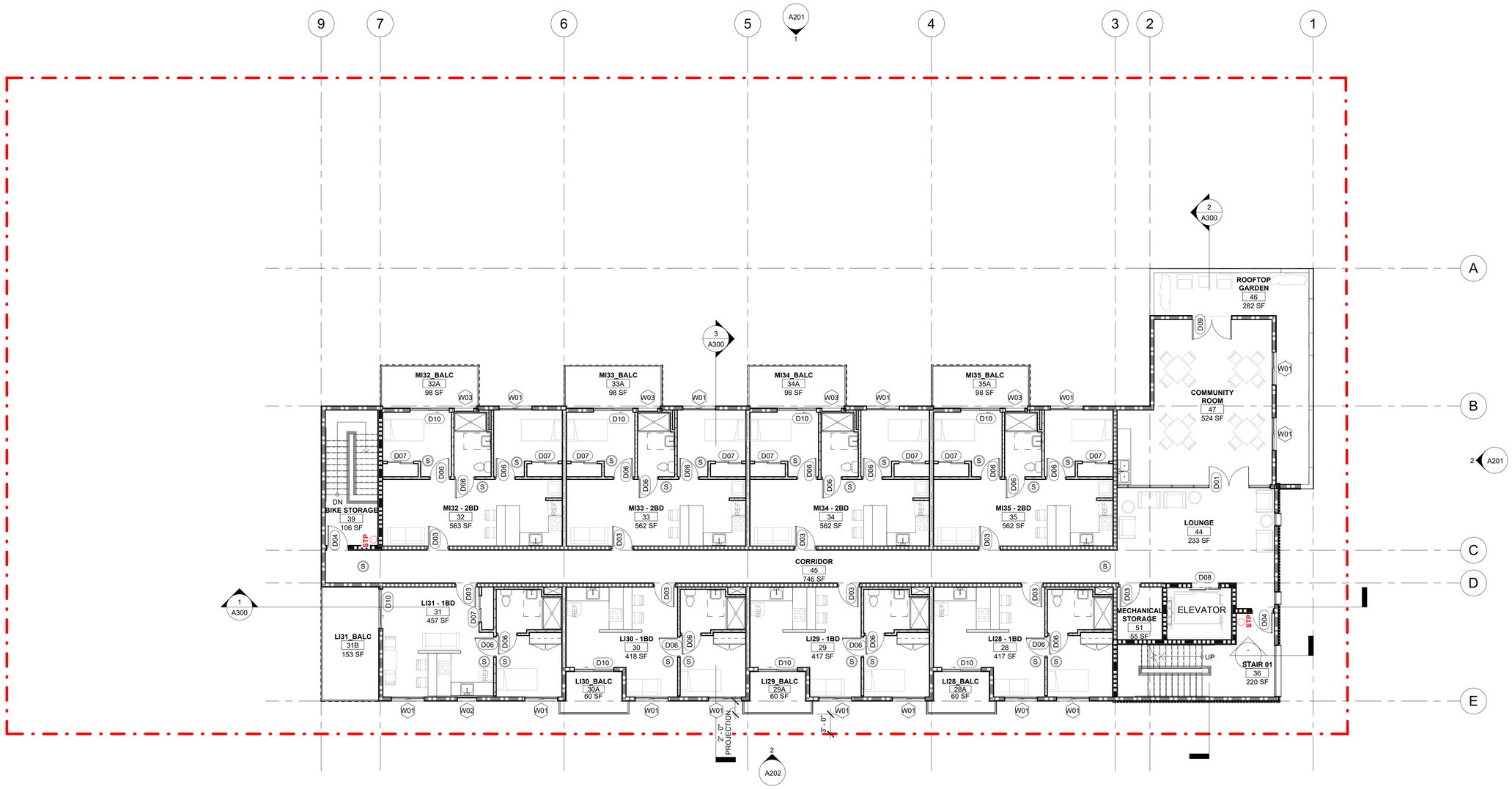

ROOM SCHEDULE - LEVEL 4			
Level	Number	Name	Area
LEVEL 4	28	LI28 - 1BD	417 SF
LEVEL 4	28A	LI28_BALC	60 SF
LEVEL 4	29	LI29 - 1BD	417 SF
LEVEL 4	29A	LI29_BALC	60 SF
LEVEL 4	30	LI30 - 1BD	418 SF
LEVEL 4	30A	LI30_BALC	60 SF
LEVEL 4	31	LI31 - 1BD	457 SF
LEVEL 4	31B	LI31_BALC	153 SF
LEVEL 4	32	MI32 - 2BD	563 SF
LEVEL 4	32A	MI32_BALC	98 SF
LEVEL 4	33	MI33 - 2BD	562 SF
LEVEL 4	33A	MI33_BALC	98 SF
LEVEL 4	34	MI34 - 2BD	562 SF
LEVEL 4	34A	MI34_BALC	98 SF
LEVEL 4	35	MI35 - 2BD	562 SF
LEVEL 4	35A	MI35_BALC	98 SF
LEVEL 4	44	LOUNGE	233 SF
LEVEL 4	45	CORRIDOR	746 SF
LEVEL 4	46	ROOFTOP GARDEN	282 SF
LEVEL 4	47	COMMUNITY ROOM	524 SF
LEVEL 4	51	MECHANICAL STORAGE	55 SF

Grand total: 21

1 FLOOR PLAN - LEVEL 04

1/8" = 1'-0"

N

WALL ASSEMBLIES

SEE A700 FOR EXTERIOR WALL ASSEMBLIES

EXT 1: 2 X 6 EXTERIOR WALL,W/ STUCCO, 1HR, STC50

SEE A701 FOR INTERIOR WALL ASSEMBLIES

INT 1: PARTY WALL, 2X STGR STUD, 1HR, STC50+

INT 2: 2 X 4 INTERIOR PARTITION WALL, NR

INT 3: 2 X 6 WOOD STUD, STC 50, 1HR

INT 4: 2 X 6 WOOD STUD, STC 63, 2 HR FIRE BARRIER

INT 5: 2 X 6 PLUMBING WALL

INT 6: 2HR SHAFT WALL

S — CEILING MOUNTED SMOKE ALARM ELECTRICAL POWER WITH BATTERY BACKUP PER BUILDING CODE 907.2.11.2

FDC — **FIRE DEPARTMENT CONNECTION** (Location coordinate with local fire department)

STP — **STANDPIPE - CLASS I WET** (Location coordinate with local fire department)

www.ULTRA-UNIT.com

Architect:
Ultra-Unit Architectural Studio
1327 Loma Avenue
Long Beach, California 90804
e. cameron@ultra-unit.com

Structural Engineer:
David Choi & Associates
1327 Loma Avenue
Long Beach, California 90804
e. david@dca-se.com

Owner:
Sarah Johnson
1377 N Garey Ave, LP
3982 S Figueroa St, Suite 209
Los Angeles CA, 90037
development@pathway2tomorrow.org

Architect Stamp

LICENSED ARCHITECT
CAMERON CROCKETT
C31503
1.31.2025
RENEWAL DATE
STATE OF CALIFORNIA

Date 10/7/2024

Project:
N GAREY AVE
1377 N GAREY AVE
POMONA, CA

Client Name: SOUTHLAND DEVELOPMENT CO. INC.

Revisions

No.	Description	Date

Sheet Name
FLOOR PLAN - LEVEL 04

Sheet Number
A104

Project Number	23-1025
Drawn By	GG
Checked By	CC
Scale	As indicated

7/16/2025 11:42:51 AM C:\Users\User\Desktop\1377 N Garey Ave _ R24_DL_cams.rvt

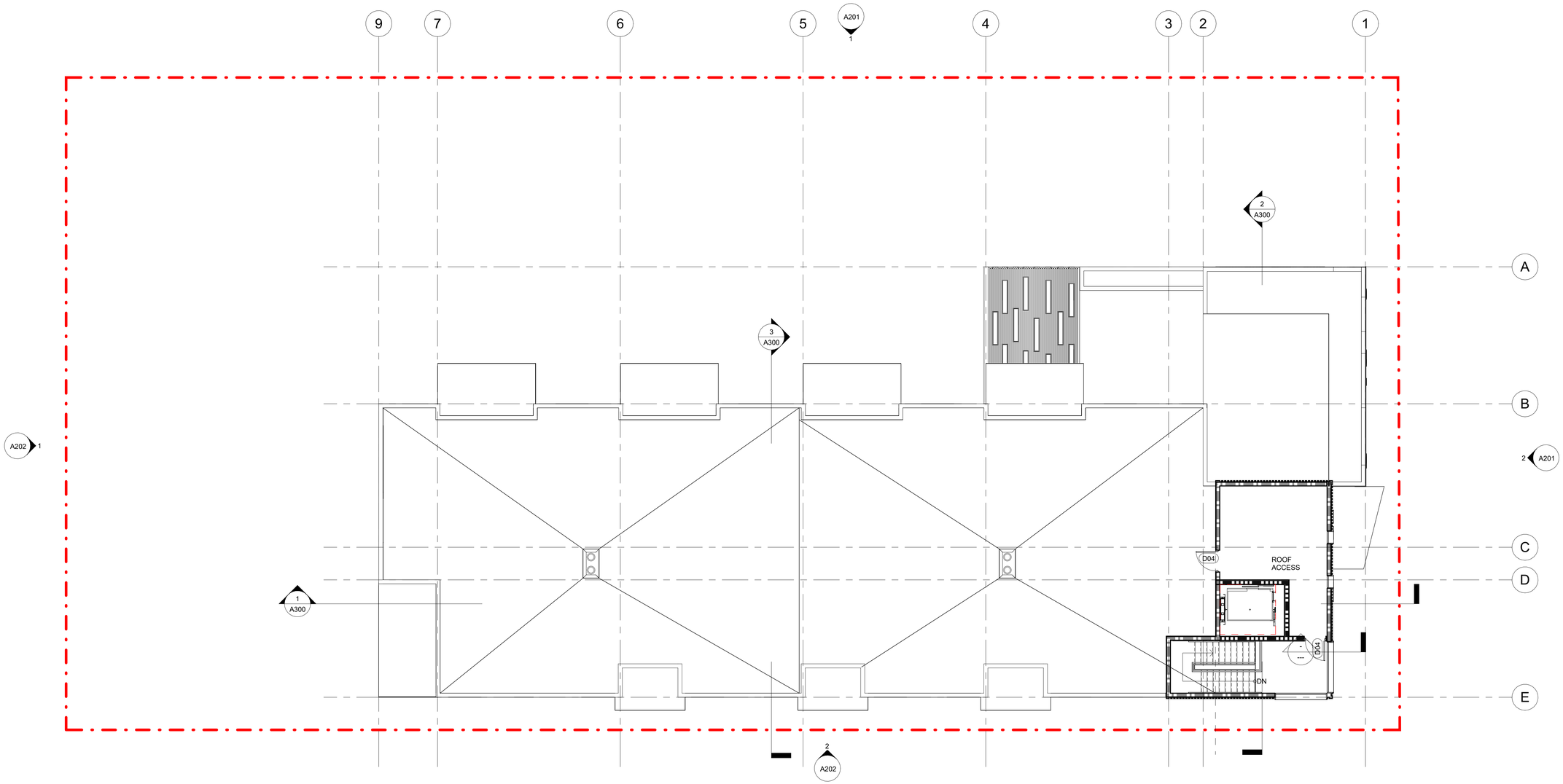

1 **FLOOR PLAN - LEVEL ROOF ACCESS**
1/8" = 1'-0"

N

WALL ASSEMBLIES

SEE A700 FOR EXTERIOR WALL ASSEMBLIES

EXT 1: 2 X 6 EXTERIOR WALL,W/ STUCCO, 1HR, STC50

SEE A701 FOR INTERIOR WALL ASSEMBLIES

INT 1: PARTY WALL, 2X STGR STUD, 1HR, STC50+

INT 2: 2 X 4 INTERIOR PARTITION WALL, NR

INT 3: 2 X 6 WOOD STUD, STC 50, 1HR

INT 4: 2 X 6 WOOD STUD, STC 63, 2 HR FIRE BARRIER

INT 5: 2 X 6 PLUMBING WALL

INT 6: 2HR SHAFT WALL

S — CEILING MOUNTED SMOKE ALARM
ELECTRICAL POWER WITH BATTERY BACKUP
PER BUILDING CODE 907.2.11.2

FDC — **FIRE DEPARTMENT CONNECTION**
(Location coordinate with local fire department)

STP — **STANDPIPE - CLASS I WET**
(Location coordinate with local fire department)

www.ULTRA-UNIT.com

Architect:
Ultra-Unit Architectural Studio
1327 Loma Avenue
Long Beach, California 90804
e. cameron@ultra-unit.com

Structural Engineer:
David Choi & Associates
1327 Loma Avenue
Long Beach, California 90804
e. david@dca-se.com

Owner:
Sarah Johnson
1377 N Garey Ave, LP
3982 S Figueroa St, Suite 209
Los Angeles CA, 90037
development@pathway2tomorrow.org

Architect Stamp

LICENSED ARCHITECT
CAMERON CROCKETT
C31503
1.31.2025
RENEWAL DATE
STATE OF CALIFORNIA

Date 10/7/2024

Project:
N GAREY AVE
1377 N GAREY AVE
POMONA, CA

Client Name:
SOUTHLAND DEVELOPMENT CO. INC.

Revisions

No.	Description	Date

Sheet Name
ROOF ACCESS PLAN

Sheet Number
A105

Project Number	23-1025
Drawn By	GG
Checked By	CC
Scale	As indicated

C:\Users\User\Desktop\1377 N Garey Ave _ R24_DL_cams.rvt
7/16/2025 11:42:54 AM

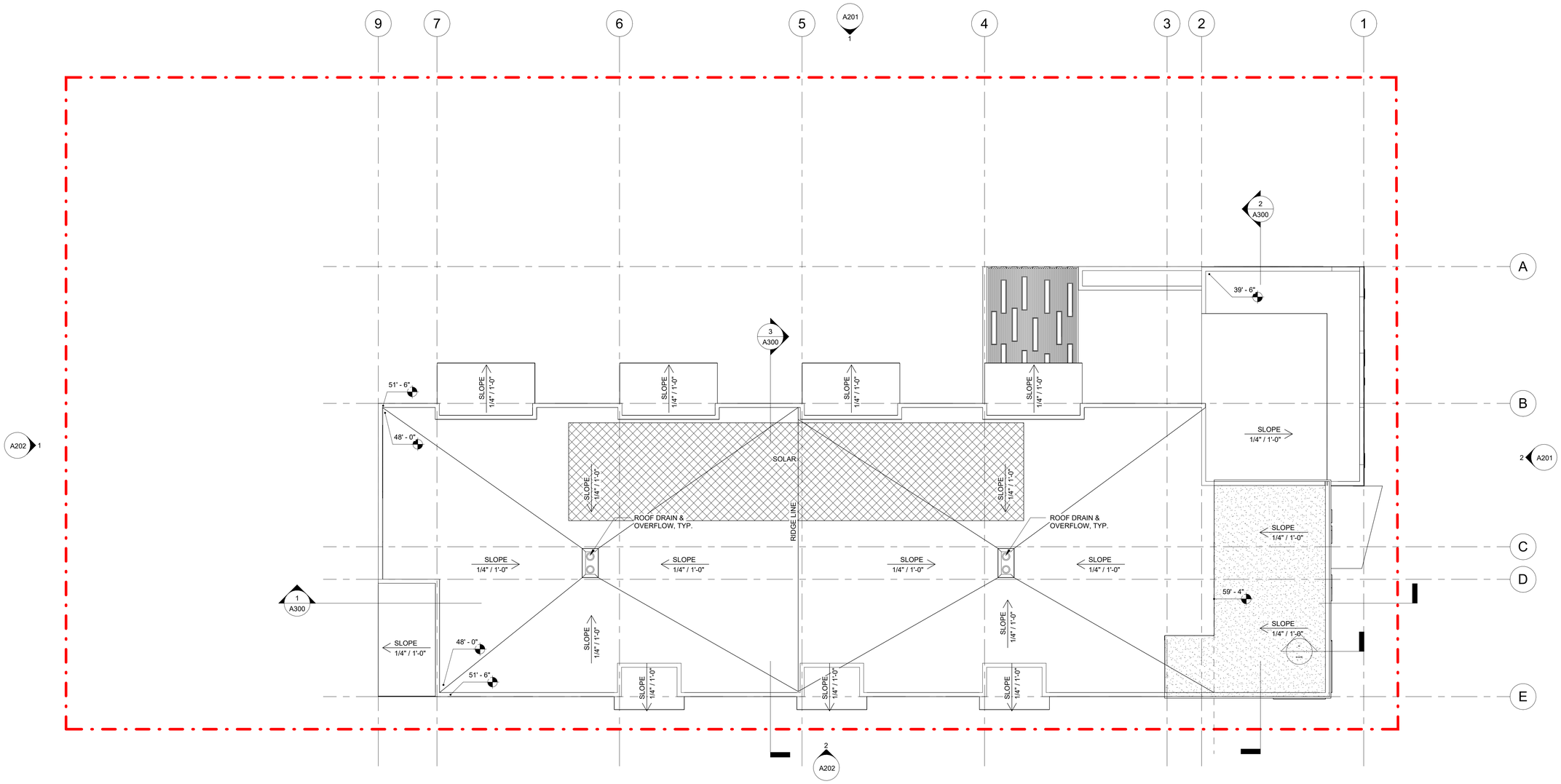

1 **FLOOR PLAN - LEVEL ROOF**
1/8" = 1'-0"

N

WALL ASSEMBLIES

SEE A700 FOR EXTERIOR WALL ASSEMBLIES

EXT 1: 2 X 6 EXTERIOR WALL,W/ STUCCO, 1HR, STC50

SEE A701 FOR INTERIOR WALL ASSEMBLIES

INT 1: PARTY WALL, 2X STGR STUD, 1HR, STC50+

INT 2: 2 X 4 INTERIOR PARTITION WALL, NR

INT 3: 2 X 6 WOOD STUD, STC 50, 1HR

INT 4: 2 X 6 WOOD STUD, STC 63, 2 HR FIRE BARRIER

INT 5: 2 X 6 PLUMBING WALL

INT 6: 2HR SHAFT WALL

S — CEILING MOUNTED SMOKE ALARM
ELECTRICAL POWER WITH BATTERY BACKUP
PER BUILDING CODE 907.2.11.2

FDC — **FIRE DEPARTMENT CONNECTION**
(Location coordinate with local fire department)

STP — **STANDPIPE - CLASS I WET**
(Location coordinate with local fire department)

www.ULTRA-UNIT.com
Architectural Studio

www.ULTRA-UNIT.com

Architect:
Ultra-Unit Architectural Studio
1327 Loma Avenue
Long Beach, California 90804
e. cameron@ultra-unit.com

Structural Engineer:
David Choi & Associates
1327 Loma Avenue
Long Beach, California 90804
e. david@dca-se.com

Owner:
Sarah Johnson
1377 N Garey Ave, LP
3982 S Figueroa St, Suite 209
Los Angeles CA, 90037
development@pathway2tomorrow.org

Architect Stamp

LICENSED ARCHITECT
CAMERON CROCKETT
C31503
1.31.2025
RENEWAL DATE
STATE OF CALIFORNIA

Date 10/7/2024

Project:
N GAREY AVE
1377 N GAREY AVE
POMONA, CA

Client Name:
SOUTHLAND DEVELOPMENT CO. INC.

Revisions

No.	Description	Date

Sheet Name
ROOF PLAN

Sheet Number
A106

Project Number	23-1025
Drawn By	GG
Checked By	CC
Scale	As indicated

7/16/2025 11:42:56 AM C:\Users\User\Desktop\1377 N Garey Ave _ R24_DL_cams.rvt

Luminaire Schedule					
Symbol	Qty	Label	LLF	Description	Lum. Lumens
	6	FIX-01	0.903	WAC LTG - WP-LED-336-30D A081814	2071
	7	FIX-03	0.903	LIGHTOLOGY - CIRCA WALL/CLG MFR360263	1091
	2	P	0.903	LITHONIA - DSX0 LED P4 35K 80CRI T3M	10011
	2	P2	0.903	LITHONIA - DSX0 LED P4 35K 80CRI T4M HS	8741
	1	PED	0.903	LITHONIA - DSX0 LED P1 35K 80CRI T3M	4310
	1	W	0.903	LITHONIA - DSXW1 P6 35K 80CRI T3M	6329

CALCULATION POINTS AT GROUND

CALCULATION POINTS AT 5' O.C.

REFLECTANCES ARE .5

Calculation Summary							
Label	CalcType	Units	Avg	Max	Min	Avg/Min	Max/Min
PARKING	Illuminance	Fc	3.36	25.0	1.0	3.36	25.00
PEDESTRIAN WALKWAY	Illuminance	Fc	5.10	9.0	1.9	2.68	4.74

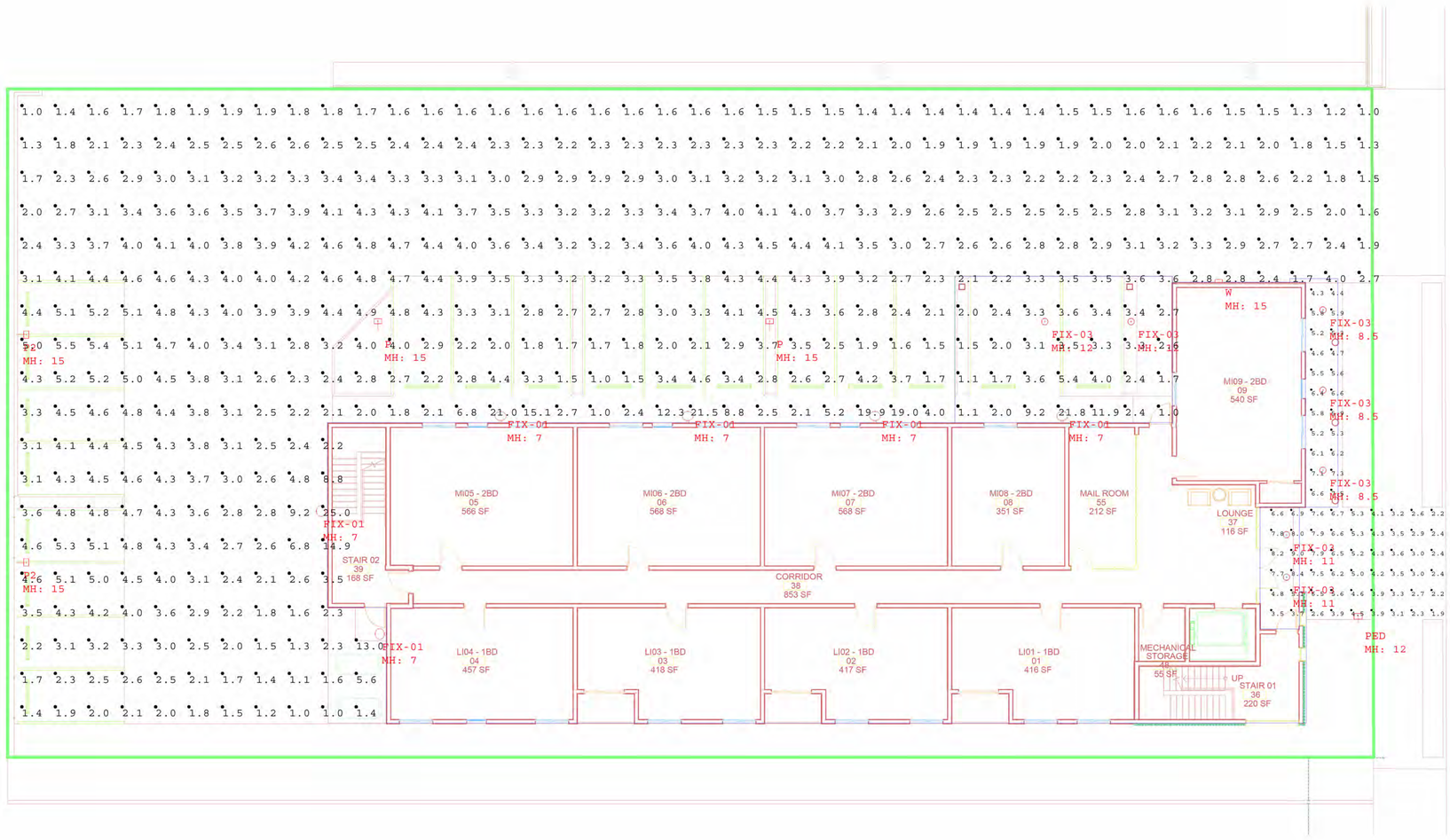

24"x 36"

Rev. #	Description	Rev. Date
R1	.....	.....
R2	.....	.....
R3	.....	.....
R4	.....	.....
R5	.....	.....

Disclaimer
The calculations are Ultra-Unit's best estimate based on generally accepted industry practices and standards. However, actual results may differ from the expected results due to variances in installation methods, varying conditions and improper or undocumented lamp burn-in procedures. Further, room dimensions, component performance, measurement techniques and varying conditions are beyond Ultra-Unit's control and are not guaranteed by Ultra-Unit. Ultra-Unit's lighting calculations are based on generally accepted industry practices and standards. Verification of the calculations herein, including design acceptability, and compliance with any applicable lighting codes is not our responsibility, and is the responsibility of the contractor/owner/architect/engineer/designer. Please refer to Luminaire Schedule for light loss factor (LLF) details used in the calculations.

Project:
GAREY POMONA PARKING LIGHTING
Author:
CAMERON CROCKETT
Company:
ULTRA-UNIT ARCHITECTURAL STUDIO

www.ULTRA-UNIT.com

Architect:
Ultra-Unit Architectural Studio
1327 Loma Avenue
Long Beach, California 90804
e. cameron@ultra-unit.com

Structural Engineer:
David Choi & Associates
1327 Loma Avenue
Long Beach, California 90804
e. david@dca-se.com

Owner:
Sarah Johnson
1377 N Garey Ave, LP
3982 S Figueroa St, Suite 209
Los Angeles CA, 90037
development@pathway2tomorrow.org

Architect Stamp

LICENSED ARCHITECT
CAMERON CROCKETT
C31503
1.31.2025
RENEWAL DATE
STATE OF CALIFORNIA

Date 10/7/2024

Project:
N GAREY AVE
1377 N GAREY AVE
POMONA, CA

Client Name:
SOUTHLAND DEVELOPMENT CO. INC.

Revisions

No.	Description	Date

Sheet Name
LIGHTING PLAN

Sheet Number
A107

Project Number	23-1025
Drawn By	GG
Checked By	CC
Scale	

7/16/2025 11:43:01 AM C:\Users\User\Desktop\1377 N Garey Ave _ R24_DL_cams.rvt

1 **EXTERIOR ELEVATION - NORTH**
1/8" = 1'-0"

2 **EXTERIOR ELEVATION - EAST**
1/8" = 1'-0"

MATERIAL BOARD

1 SMOOTH FINE-TEXTURED STUCCO
COLOR: BEHR - ULTRA PURE WHITE 01

Exterior Stucco Color Coat

LaHabra Exterior Stucco Color Coat provides a lasting, durable color finish over LaHabra Fiber-47 Fastwall Scratch & Brown, LaHabra Fastwall Stucco Base, portland cement plaster "brown coat" and Parex USA Stucco Level Coat. It is integrally colored with fade-resistant pigments, and is economical with low maintenance. Product is available in premix or tint Base.

LaHabra Exterior Stucco Color Coat is available in the following bases/aggregate size for use with LaHabra Color Packs:
* Base 100 16/20 * Base 200 16/20
* Base 100 20/30 * Base 200 20/30

2 SMOOTH FINE-TEXTURED STUCCO
COLOR: BEHR - KAFFEE MQ2-49

Exterior Stucco Color Coat

LaHabra Exterior Stucco Color Coat provides a lasting, durable color finish over LaHabra Fiber-47 Fastwall Scratch & Brown, LaHabra Fastwall Stucco Base, portland cement plaster "brown coat" and Parex USA Stucco Level Coat. It is integrally colored with fade-resistant pigments, and is economical with low maintenance. Product is available in premix or tint Base.

LaHabra Exterior Stucco Color Coat is available in the following bases/aggregate size for use with LaHabra Color Packs:
* Base 100 16/20 * Base 200 16/20
* Base 100 20/30 * Base 200 20/30

3 MORIN ARCHITETURAL METAL PANEL
MATRIX MX-1
COLOR: SILVERSMITH

4 METAL PANEL
COLOR: BEHR - ULTRA PURE WHITE 01

5 WOOD WINDOW TRIM
COLOR: BEHR - SPIRITED YELLOW P290-4

6

GUARDRAIL
VIEWRAIL - CABLE RAILING
COLOR: SILVERSMITH

MILGARD V300 SERIES
CASEMENT WINDOWS
CLEAR GLASS, NO TINT

W01

MILGARD V400 SERIES
TUSCANY SERIES V400 SLIDING PATIO DOOR
CLEAR GLASS, NO TINT

D01

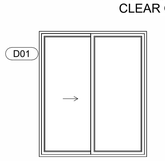

www.ULTRA-UNIT.com

Architect:
Ultra-Unit Architectural Studio
1327 Loma Avenue
Long Beach, California 90804
e. cameron@ultra-unit.com

Structural Engineer:
David Choi & Associates
1327 Loma Avenue
Long Beach, California 90804
e. david@dca-se.com

Owner:
Sarah Johnson
1377 N Garey Ave, LP
3982 S Figueroa St, Suite 209
Los Angeles CA, 90037
development@pathway2tomorrow.org

Architect Stamp

LICENSED ARCHITECT
CAMERON CROCKETT
C31503
1.31.2025
RENEWAL DATE
STATE OF CALIFORNIA

Date 10/7/2024

Project:
N GAREY AVE
1377 N GAREY AVE
POMONA, CA

Client Name:
SOUTHLAND DEVELOPMENT CO. INC.

Revisions

No.	Description	Date

Sheet Name
EXTERIOR ELEVATIONS

Sheet Number
A201

Project Number	23-1025
Drawn By	GG
Checked By	CC
Scale	As indicated

C:\Users\User\Desktop\1377 N Garey Ave _ R24_DL_cams.rvt
7/16/2025 11:43:10 AM

2 **EXTERIOR ELEVATION - SOUTH**
1/8" = 1'-0"

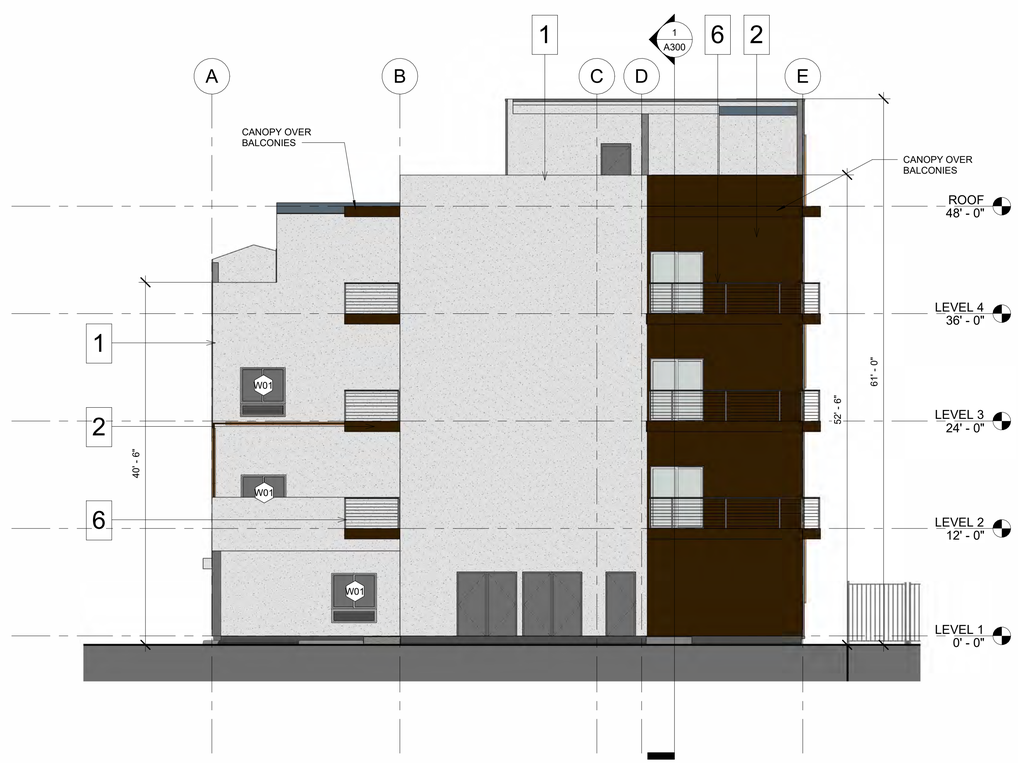

1 **EXTERIOR ELEVATION - WEST**
1/8" = 1'-0"

MATERIAL BOARD

1 SMOOTH FINE-TEXTURED STUCCO
COLOR: BEHR - ULTRA PURE WHITE 01

Exterior Stucco Color Coat

LaHabra Exterior Stucco Color Coat provides a lasting, durable color finish over LaHabra Fiber-47 Fastwall Scratch & Brown, LaHabra Fastwall Stucco Base, portland cement plaster "brown coat" and Parex USA Stucco Level Coat. It is integrally colored with fade-resistant pigments, and is economical with low maintenance. Product is available in premix or tint Base.

LaHabra Exterior Stucco Color Coat is available in the following bases/aggregate size for use with LaHabra Color Packs:
* Base 100 16/20 * Base 200 16/20
* Base 100 20/30 * Base 200 20/30

2 SMOOTH FINE-TEXTURED STUCCO
COLOR: BEHR - KAFFEE MQ2-49

Exterior Stucco Color Coat

LaHabra Exterior Stucco Color Coat provides a lasting, durable color finish over LaHabra Fiber-47 Fastwall Scratch & Brown, LaHabra Fastwall Stucco Base, portland cement plaster "brown coat" and Parex USA Stucco Level Coat. It is integrally colored with fade-resistant pigments, and is economical with low maintenance. Product is available in premix or tint Base.

LaHabra Exterior Stucco Color Coat is available in the following bases/aggregate size for use with LaHabra Color Packs:
* Base 100 16/20 * Base 200 16/20
* Base 100 20/30 * Base 200 20/30

3 MORIN ARCHITETURAL METAL PANEL
MATRIX MX-1
COLOR: SILVERSMITH

4 METAL PANEL
COLOR: BEHR - ULTRA PURE WHITE 01

5 WOOD WINDOW TRIM
COLOR: BEHR - SPIRITED YELLOW P290-4

6 GUARDRAIL
VIEWRAIL - CABLE RAILING
COLOR: SILVERSMITH

MILGARD V300 SERIES
CASEMENT WINDOWS
CLEAR GLASS, NO TINT

W01

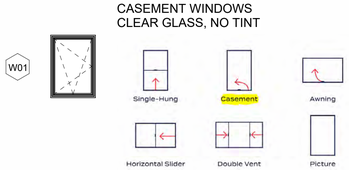

MILGARD V400 SERIES
TUSCANY SERIES V400 SLIDING PATIO DOOR
CLEAR GLASS, NO TINT

D01

www.ULTRA-UNIT.com

Architect:
Ultra-Unit Architectural Studio
1327 Loma Avenue
Long Beach, California 90804
e. cameron@ultra-unit.com

Structural Engineer:
David Choi & Associates
1327 Loma Avenue
Long Beach, California 90804
e. david@dca-se.com

Owner:
Sarah Johnson
1377 N Garey Ave, LP
3982 S Figueroa St, Suite 209
Los Angeles CA, 90037
development@pathway2tomorrow.org

Architect Stamp

LICENSED ARCHITECT
CAMERON CROCKETT
C31503
1.31.2025
RENEWAL DATE
STATE OF CALIFORNIA

Date 10/7/2024

Project:
N GAREY AVE
1377 N GAREY AVE
POMONA, CA

Client Name: SOUTHLAND DEVELOPMENT CO. INC.

Revisions

No.	Description	Date

Sheet Name
EXTERIOR ELEVATIONS

Sheet Number
A202

Project Number	23-1025
Drawn By	GG
Checked By	CC
Scale	As indicated

C:\Users\User\Desktop\1377 N Garey Ave_ R24_DL_cams.rvt
7/16/2025 11:43:19 AM

1 **BUILDING MASSSING - SOUTH ELEVATION**
1/16" = 1'-0"

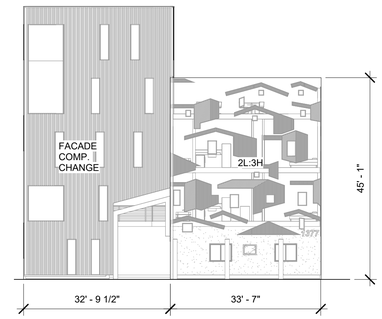

3 **BUILDING MASSING - EAST ELEVATION**
1/16" = 1'-0"

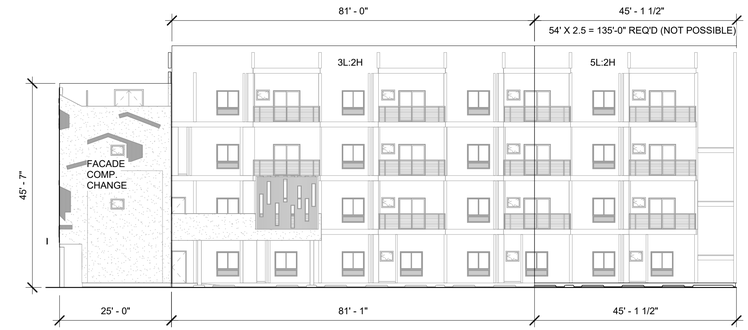

2 **BUILDING MASSING - NORTH ELEVATION**
1/16" = 1'-0"

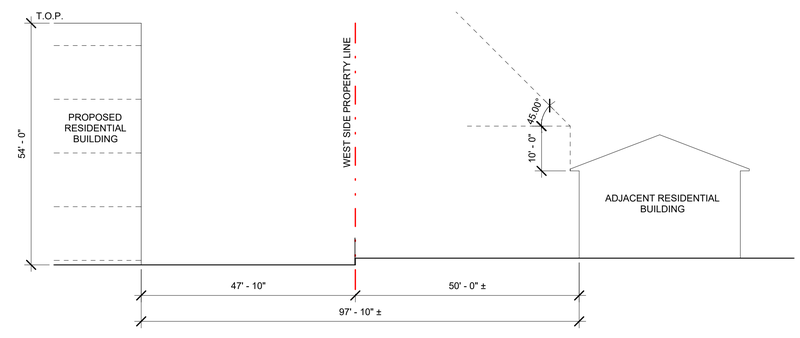

4 **ADJACENT BUILDING HEIGHT LIMITS**
1/16" = 1'-0"

www.ULTRA-UNIT.com Architectural Studio

www.ULTRA-UNIT.com

Architect:
Ultra-Unit Architectural Studio
1327 Loma Avenue
Long Beach, California 90804
e. cameron@ultra-unit.com

Structural Engineer:
David Choi & Associates
1327 Loma Avenue
Long Beach, California 90804
e. david@dca-se.com

Owner:
Sarah Johnson
1377 N Garey Ave, LP
3982 S Figueroa St, Suite 209
Los Angeles CA, 90037
development@pathway2tomorrow.org

Architect Stamp

LICENSED ARCHITECT
CAMERON CROCKETT
C31503
1.31.2025
RENEWAL DATE
STATE OF CALIFORNIA

Date 10/7/2024

Project: **N GAREY AVE**
1377 N GAREY AVE
POMONA, CA

Client Name: SOUTHLAND DEVELOPMENT CO. INC.

Revisions

No.	Description	Date

Sheet Name
BUILDING MASSING

Sheet Number
A203

Project Number	23-1025
Drawn By	GG
Checked By	CC
Scale	1/16" = 1'-0"

7/16/2025 11:43:23 AM C:\Users\User\Desktop\1377 N Garey Ave_ R24_DL_cams.rvt

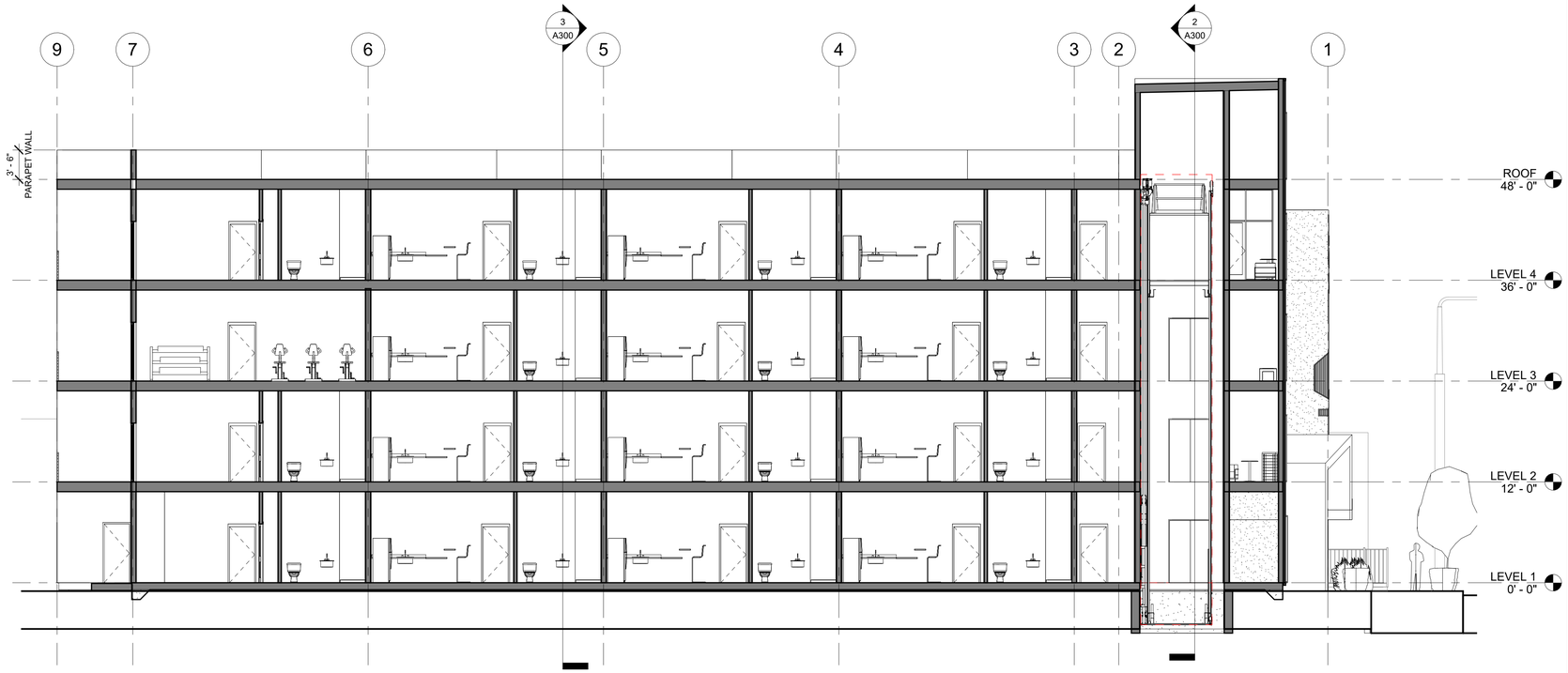

1 **BUILDING SECTION - A**
1/8" = 1'-0"

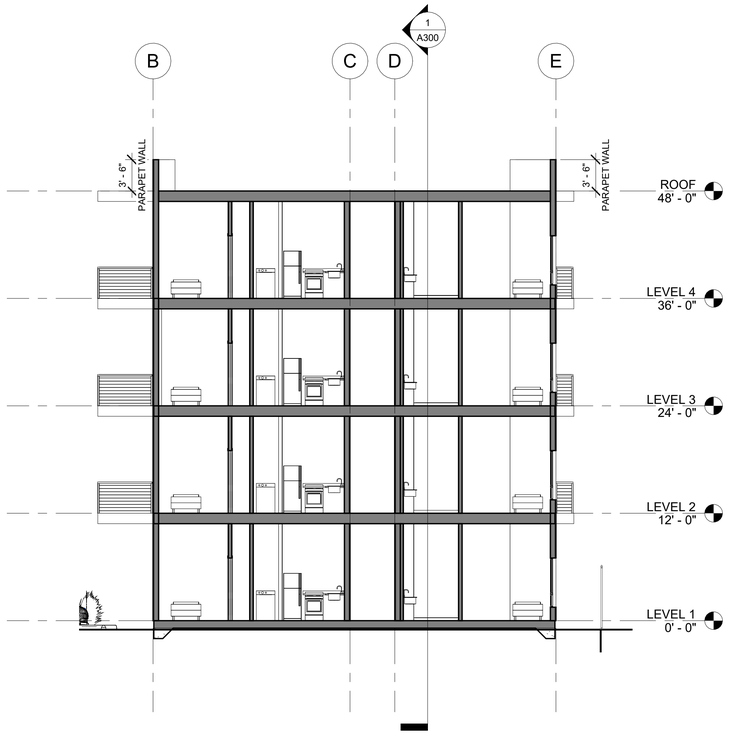

3 **CROSS SECTION - B**
1/8" = 1'-0"

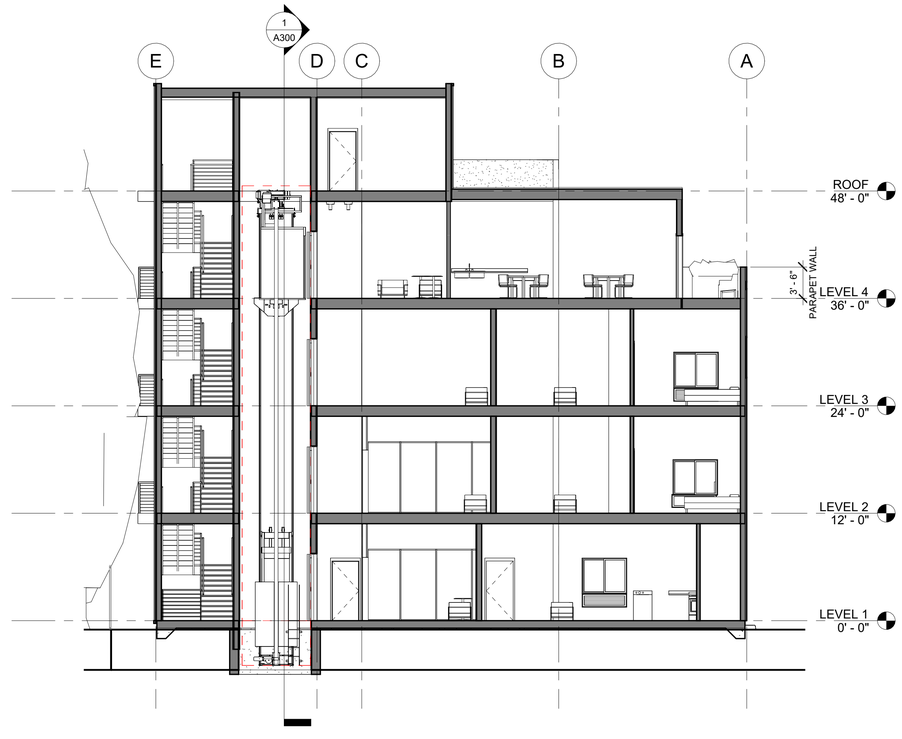

2 **CROSS SECTION - A**
1/8" = 1'-0"

FLOOR SECTION LEGEND

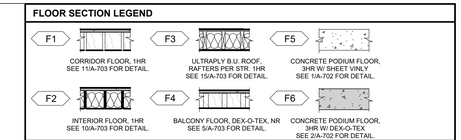

NOTES

1. EXTERIOR STUCCO:
A. MATERIALS & APPLICATION SHALL COMPLY WITH APPLICABLE SECTIONS OF THE "HANDBOOK OF RECOMMENDED SPECIFICATIONS FOR LATHING, FURRING & PLASTERING" BY THE CALIFORNIA LATHING/ PLASTERING CONTRACTORS ASSOC. AND CHAPTER 25, CBC. EXTERIOR STUCCO COLORS, TEXTURE AND FINISH SHALL BE SELECTED AND APPROVED BY OWNER.
B. STUCCO LATH SHALL BE NAILED TO ALL STUDS AND TOP AND BOTTOM PLATES
C. ALL STUCCO SHALL BE PLUMB & EVEN WITHIN 1/8" IN 10'. STUCCO SHALL BE 3 COATS W/ FINAL COAT BEING A LATEX BASED COLOR COAT.
2. EACH PANEL OF SAFETY GLAZING INSTALLED IN HAZARDOUS LOCATIONS SHALL BE IDENTIFIED BY A MANUFACTURE'S DESIGNATION SPECIFYING WHO APPLIED THE DESIGNATION, THE MANUFACTURER OR INSTALLER AND THE SAFETY GLAZING STANDARD. THE FOLLOWING SHALL BE CONSIDERED SPECIFIC HAZARDOUS LOCATIONS FOR THE PURPOSED OF SAFETY GLAZING. GLAZING IN: SECTION 2406
A. SWING DOORS.
B. FIXED AND SLIDING PANELS OF SLIDING DOOR ASSEMBLIES AND PANELS IN SLIDING AND BI-FOLD CLOSET FLOOR ASSEMBLIES.
C. STORM DOORS.
D. UNFRAMED SWING DOORS.
E. DOORS AND ENCLOSURES FOR HOT TUBS, WHIRLPOOLS, SAUNAS, STEAM ROOMS, BATHTUBS, AND SHOWERS.
F. FIXED OR OPERABLE PANELS ADJACENT TO A DOOR WHERE THE NEAREST EXPOSED EDGE OF THE GLAZING IS WITHIN 24 INCHES(610MM) ARC OF EITHER VERTICAL EDGE OF THE DOOR IN A CLOSED POSITION AND WHERE THE BOTTOM EXPOSED EDGE OF THE GLAZING IS LESS THAN 60 INCHES(1525MM) ABOVE THE WALKING SURFACE. READ CODE FOR EXCEPTIONS.
G. FIXED OR OPERABLE PANEL, OTHER THAN DESCRIBED IN ITEMS E AND F, WHICH MEETS ALL OF THER FOLLOWING CONDITIONS(READ CODE FOR EXCEPTION WITH SPECIAL INSTALLATION).
G.1 EXPOSED AREA OF AN INDIVIDUAL PANE GREATER THAN 9 SOFT(0.84M^2)
G.2 EXPOSED BOTTOM EDGE LESS THAN 18 INCHES(457MM) ABOVE THE FLOOR.
G.3 EXPOSED TOP EDGE GREATER THAN 36 INCHES(914MM) ABOVE FLOOR.
G.4 ONE OR MORE WALKING SURFACE WITHIN 35 INCHES(914MM) HORIZONTALLY OF THE PLANE OF THE GLAZING.
H. GUARDS AND RAILINGS REGARDLESS OF AREA OR HEIGHT ABOVE A WALKING SURFACE. INCLUDED ARE STRUCTURAL BALUSTER PANELS AND NONSTRUCTURAL IN-FILL PANELS.
I. WALLS AND FENCE ENCLOSING INDOOR AND OUTDOOR SWIMMING POOLS AND SPAS WHERE ALL OF THE FOLLOWING CONDITIONS ARE PRESENT:
I.1 THE BOTTOM EDGE OF THE GLAZING IS LESS THAN 60 INCHES(1525MM) ABOVE A WALKING SURFACE ON THE POOL OR SPA SIDE OF THE GLAZING.
I.2 THE GLAZING IS WITHIN 60 INCHES(1525MM) OF A SWIMMING POOL OR SPA WATER'S EDGE.
J. ADJACENT TO STAIRWAYS, LANDINGS AND RAMPS WITHIN 36 INCHES HORIZONTALLY OF A WALKING SURFACE(READ CODE FOR EXCEPTION WITH SPECIAL INSTALLATION).
K. ADJACENT TO STAIRWAYS WITHIN 60 INCHES HORIZONTALLY OF THE BOTTOM TREAD OF A STAIRWAY IN ANY DIRECTION WHEN THE EXPOSED SURFACE OF THE GLASS IS LESS THAN 60 INCHES ABOVE THE NOSE OF THE TREAD(READ CODE FOR EXCEPTION WITH SPECIAL INSTALLATION).

GYPSUM WALLBOARD (DRYWALL) 5/8":
1 ALL GYPSUM WALLBOARD SHALL BE INSTALLED IN ACCORDANCE WITH THE PROVISIONS SET FORTH IN THE CURRENT EDITION OF THE CBC, AND APPLICABLE AGENCIES.
2. GYPSUM WALLBOARD SHALL NOT BE INSTALLED UNTIL WEATHER PROTECTION FOR THE INSTALLATION IS PROVIDED.
3. SINGLE-PLY APPLICATION.

1. ALL EDGES AND ENDS OF GYPSUM WALLBOARD SHALL OCCUR ON THE FRAMING MEMBERS, EXCEPT THOSE EDGES AND ENDS THAT ARE PERPENDICULAR TO THE FRAMING MEMBERS. ALL EDGES AND ENDS OF GYPSUM WALLBOARD SHALL BE IN MODERATE CONTACT EXCEPT IN CONCEALED SPACES WHERE FIRE-RESISTIVITY CONSTRUCTION OR DIAPHRAGM ACTION IS NOT REQUIRED.
2. THE SIZE AND SPACING OF FASTENERS SHALL COMPLY WITH THE CURRENT EDITION OF THE CBC EXCEPT WHERE MODIFIED BY FIRE-RESISTIVITY CONSTRUCTION. FASTENERS SHALL NOT BE SPACED LESS THAN 3/8 INCH FROM EDGES AND ENDS OF GYPSUM WALLBOARD. FASTENERS AT THE TOP AND BOTTOM PLATES OF VERTICAL ASSEMBLIES, OR THE EDGES AND ENDS OF HORIZONTAL ASSEMBLIES PERPENDICULAR TO SUPPORTS, AND AT THE WALL LINE MAY BE OMITTED EXCEPT ON SHEAR-RESISTING ELEMENTS OR FIRE-RESISTIVITY ASSEMBLIES. FASTENERS SHALL BE APPLIED IN SUCH A MANNER AS NOT TO FRACTURE THE FACE PAPER WITH THE FASTENER HEAD.
3. WHEN GYPSUM IS USED AS A BASE FOR TILE OR WALL PANELS FOR TUB, SHOWER OR WATER CLOSET COMPARTMENT WALLS , WATER-RESISTANT GYPSUM BACKING BOARD SHALL BE USED.
4 WATER-RESISTANT GYPSUM BOARD SHALL NOT BE USED IN THE FOLLOWING LOCATIONS:
4.1. OVER A VAPOR RETARDER
4.2. IN AREAS SUBJECT TO CONTINUOUS HIGH HUMIDITY, SUCH AS SAUNAS, STEAM OOMS OR GANG SHOWER ROOMS.
4.3. ON CEILINGS WHERE FRAME SPACING EXCEEDS 12 INCHES ON CENTER.
5. PROVIDE 5/8" GYPSUM WALLBOARD @ ALL INTERIOR WALLS U.N.O. AND 1/2" GYPSUM WALLBOARD @ ALL INTERIOR CEILING SURFACES, U.N.O.
6. ALL GYPSUM WALLBOARD SHALL HAVE THE FOLLOWING:
6.1. AT JOINTS: PROVIDE PERFORATED TAPE, BEDDING & TAPING COMPOUND FINISHED SMOOTH @ ALL JOINTS. PROVIDE BULL NOSED CORNERS @ ALL INTERIOR CORNERS.
6.2. FNISH: WALLS SHALL HAVE A SMOOTH OR LIGHT ORANGE PEAL FINISH
6.3. LINOLEUM: MATERIALS, COLOR & FINISH SHALL BE SELECTED & APPROVED BY THE OWNER. FLOORING SUB-CONTRACTOR SHALL FURNISH, INSTALL & FINISH ALL FLOORING WORK TO BE TRUE & PLUMB. INSTALL PER MANUFACTURERS INSTALLATION INSTRUCTIONS.
6.4.TILE FLOORING: THE OWNER SHALL SELECT ALL FLOOR TILE & COLORS. ALL TILE MATERIALS SHALL BE INSTALLED "LATEX-PORTLAND CEMENT MORTAR SET", NO HAND-SET TILE APPLICATIONS WILL BE ALLOWED. CONTRACTOR SHALL SUPPLY ALL MATERIALS, PREP. AND INSTALL.
6.5. ALL AREAS & INSTALL ALL CERAMIC TILE MATERIALS IN STRICT CONFORMANCE WITH THE LATEST EDITION OF THE AMERICAN TILE INSTITUTE, HANDBOOK FOR TILE INSTALLATION.

www.ULTRA-UNIT.com Architectural Studio

www.ULTRA-UNIT.com

Architect:
Ultra-Unit Architectural Studio
1327 Loma Avenue
Long Beach, California 90804
e. cameron@ultra-unit.com

Structural Engineer:
David Choi & Associates
1327 Loma Avenue
Long Beach, California 90804
e. david@dca-se.com

Owner:
Sarah Johnson
1377 N Garey Ave, LP
3982 S Figueroa St, Suite 209
Los Angeles CA, 90037
development@pathway2tomorrow.org

Architect Stamp

LICENSED ARCHITECT
CAMERON CROCKETT
C31503
1.31.2025
RENEWAL DATE
STATE OF CALIFORNIA

Date 10/7/2024

Project:
N GAREY AVE
1377 N GAREY AVE
POMONA, CA

Client Name: SOUTHLAND DEVELOPMENT CO. INC.

Revisions

No.	Description	Date

Sheet Name
FULL BUILDING SECTIONS

Sheet Number
A300

Project Number	23-1025
Drawn By	GG
Checked By	CC
Scale	As indicated

7/16/2025 11:43:33 AM C:\Users\User\Desktop\1377 N Garey Ave_ R24_DL_cams.rvt

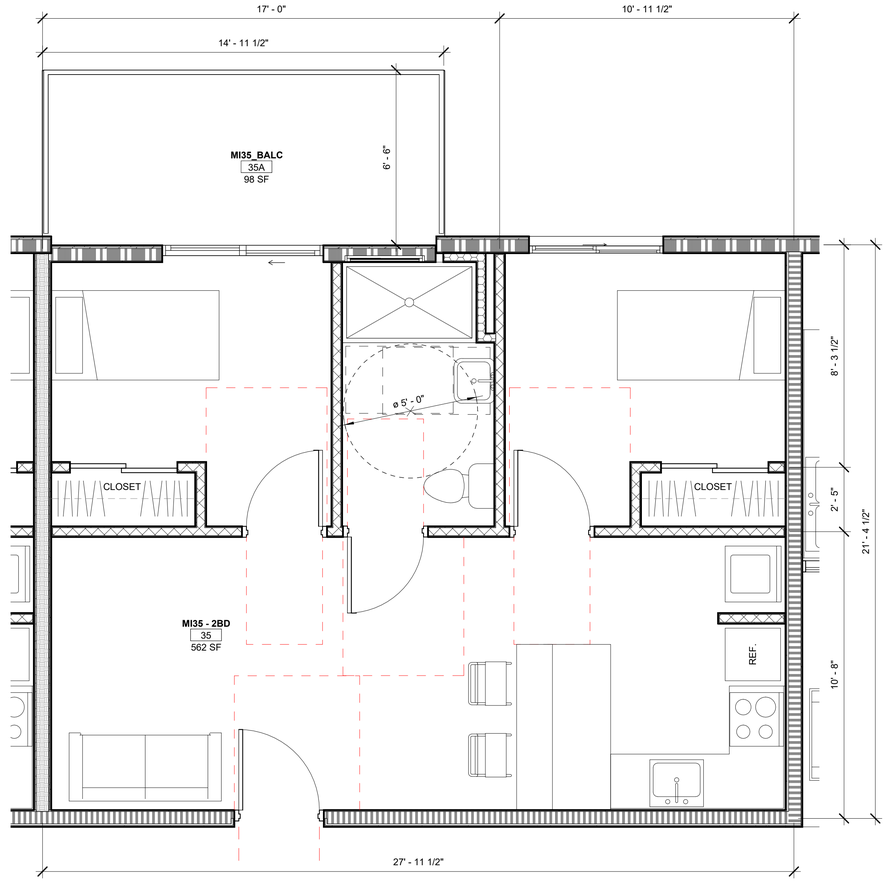

2 ENLARGED PLAN - UNIT B
3/8" = 1'-0"

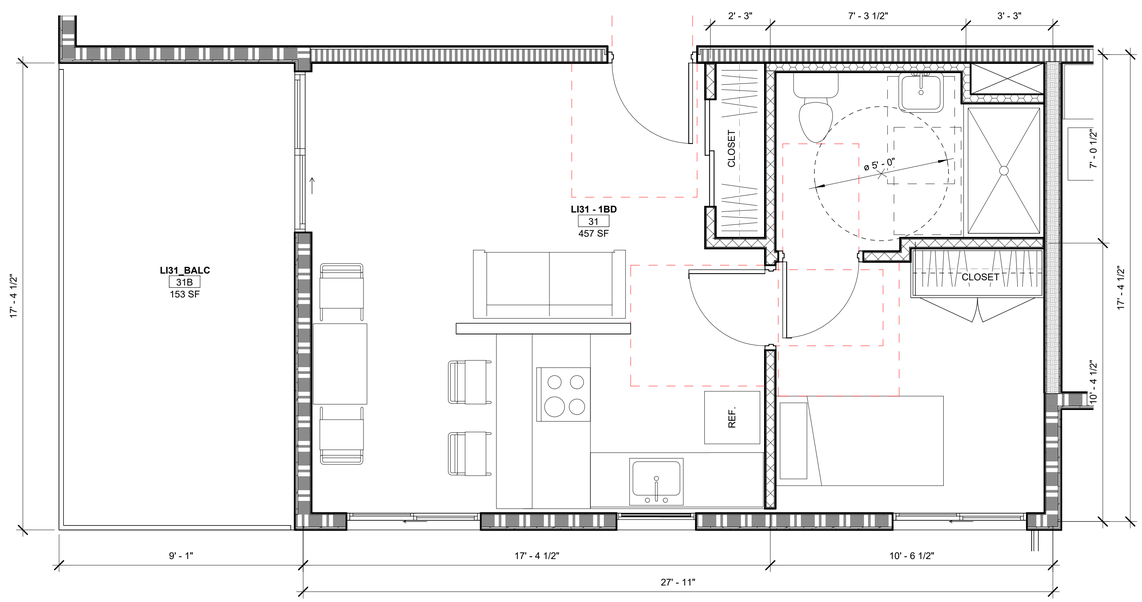

1 ENLARGED PLAN - UNIT A
3/8" = 1'-0"

FINISH SCHEDULE

		xxx-xx	Room Name
		xxxx	Room Number
		F-x C-x	Floor / Ceiling Finish
		W-x	Walls Finish
WALL FINISH	W-A	5/8" DRYWALL – PTD. WHITE [SATIN] WOOD TRIMS & BUILT-IN SHELVING - PTD. WHITE [SATIN]	A. SEE DOOR & WINDOW SCHEDULE FOR GLAZING, DOORS AND FRAMES. B. PAINT TO BE BY DUNN & EDWARDS DEW380, RL #005 SATIN FINISH, DEW380 SEMI-GLOSS FINISH AND DEW380 FLAT FINISH. C. ARCHITECT'S APPROVAL REQUIRED FOR EACH OF THE ABOVE PRIOR TO PURCHASE AND INSTALLATION. D. CLASS C INTERIOR FINISH.
	W-B	5/8" DRYWALL – PTD. WHITE [SEMI-GLOSS]. NOTE: PORTION OF WALL BEHIND TUB ACRYLIC WALL SURROUND [CEMENT BOARD CLAD STUDS] NOT TO BE PAINTED	A. SEE DOOR & WINDOW SCHEDULE FOR GLAZING, DOORS AND FRAMES. B. WHITE PAINT TO BE BY DUNN & EDWARDS DEW380, RL #005 SATIN FINISH, DEW380 SEMI-GLOSS FINISH AND DEW380 FLAT FINISH. C. ARCHITECT'S APPROVAL REQUIRED FOR THE ABOVE PRIOR TO PURCHASE AND INSTALLATION. D. CLASS C INTERIOR FINISH. NOTE: PLAN FOR THE CONVERSION OF THE ADA ADAPTABLE BATH INTO THE COMPLIANT VERSION BY INSTALLING THE BACKING IN THE WALLS AS PART OF THE INITIAL CONSTRUCTION TO MINIMIZE THE IMPACT OF ADDING THE REQUIRED GRAB BARS AND PLUMBING CHANGES IN THE FUTURE.
	W-K	5/8" DRYWALL – PTD. WHITE [SATIN]	A. SEE DOOR & WINDOW SCHEDULE FOR GLAZING, DOORS AND FRAMES. B. PAINT TO BE BY DUNN & EDWARDS DEW380, RL #005 SATIN FINISH, DEW380 SEMI-GLOSS FINISH AND DEW380 FLAT FINISH. C. KITCHEN CABINETS AND ISLAND TO BE "EDGELEY WHITE WITH THERMOFOIL FINISH" BY HAMPTON BAY. TO BE INSTALLED WITH KICK BY HAMPTON BAY AND COVED BASE TO MATCH ONE IN ADJACENT SPACES. D. KITCHEN COUNTER TOPS TO BE WHITE QUARTZITE AND MATCH ARCHITECT'S APPROVED SAMPLE. E. ARCHITECT'S APPROVAL REQUIRED FOR EACH OF THE ABOVE PRIOR TO PURCHASE AND INSTALLATION.
FLOOR FINISH	F-1	VINYL SHEET FLOORING WITH DIAMOND #10 TECHNOLOGY BY ARMSTRONG FLOORING, PREMIUM / BETTER QUALITY" AND TO MATCH ARCHITECT'S APPROVED SAMPLE. BASE: 4" VINYL COVE BASE- COLOR TO BE COMPATIBLE WITH FINISHED FLOOR MATERIAL.	
CEILING FINISH	C-1	5/8" DRYWALL – PTD. CEILING WHITE [FLAT]	CLASS C INTERIOR FINISH
	C-2	5/8" DRYWALL – PTD. CEILING WHITE [SEMI-GLOSS]	CLASS C INTERIOR FINISH

NOTE: INTERIOR FINISH MATERIALS APPLIED TO WALL AND CEILINGS SHALL BE TESTED AS SPECIFIED IN SECTION 803.

PLAN LEGEND

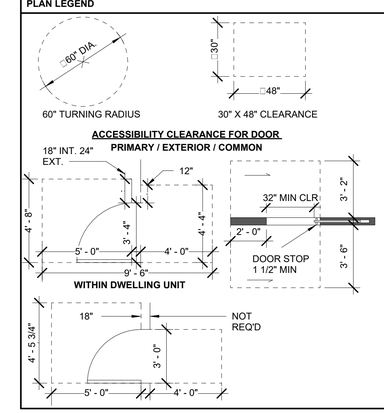

www.ULTRA-UNIT.com

Architect:
Ultra-Unit Architectural Studio
1327 Loma Avenue
Long Beach, California 90804
e. cameron@ultra-unit.com

Structural Engineer:
David Choi & Associates
1327 Loma Avenue
Long Beach, California 90804
e. david@dca-se.com

Owner:
Sarah Johnson
1377 N Garey Ave, LP
3982 S Figueroa St, Suite 209
Los Angeles CA, 90037
development@pathway2tomorrow.org

Architect Stamp

LICENSED ARCHITECT
CAMERON CROCKETT
C31503
1.31.2025
RENEWAL DATE
STATE OF CALIFORNIA

Date 10/7/2024

Project: **N GAREY AVE**
1377 N GAREY AVE
POMONA, CA

Client Name: SOUTHLAND DEVELOPMENT CO. INC.

Revisions

No.	Description	Date

Sheet Name
ENLARGED PLANS

Sheet Number
A400

Project Number	23-1025
Drawn By	GG
Checked By	CC
Scale	As indicated

C:\Users\User\Desktop\1377 N Garey Ave _ R24_DL_cams.rvt
7/16/2025 11:43:38 AM

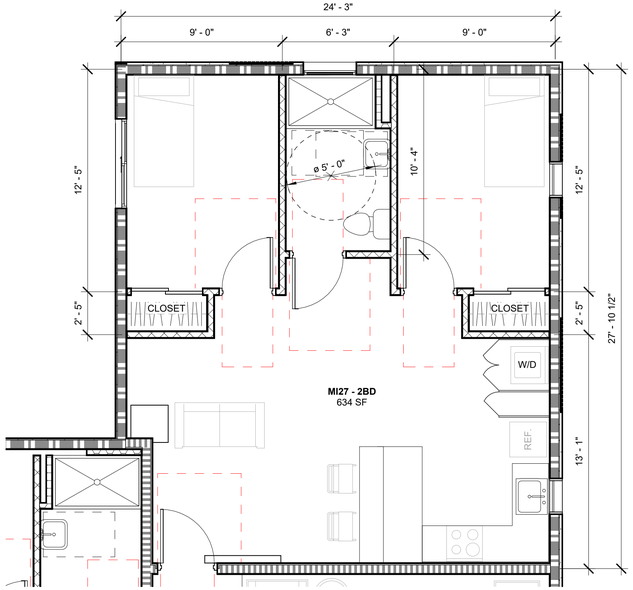

4 **ENLARGED PLAN - UNIT D**
1/4" = 1'-0"

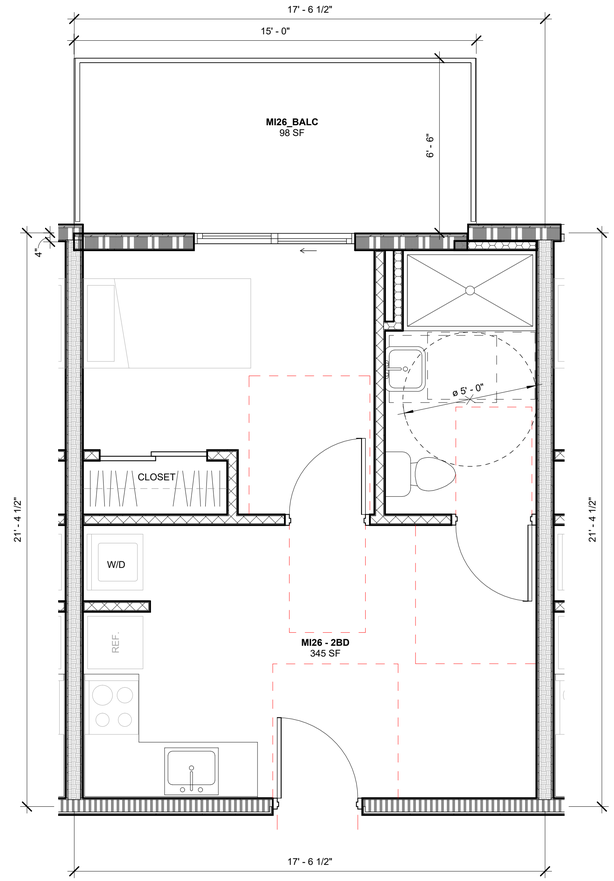

2 **ENLARGED PLAN - UNIT F**
3/8" = 1'-0"

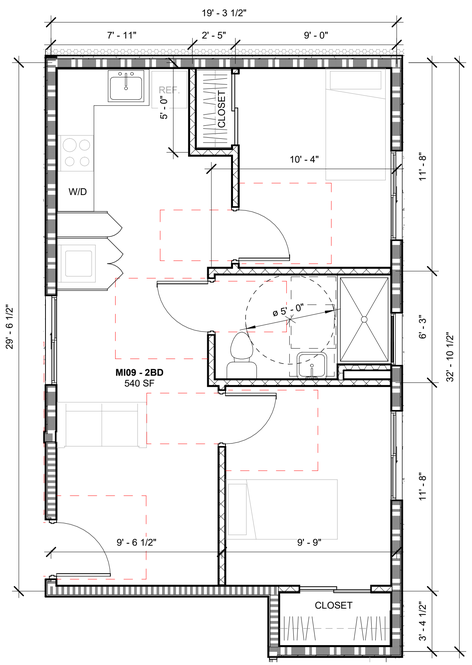

3 **ENLARGED PLAN - UNIT C**
1/4" = 1'-0"

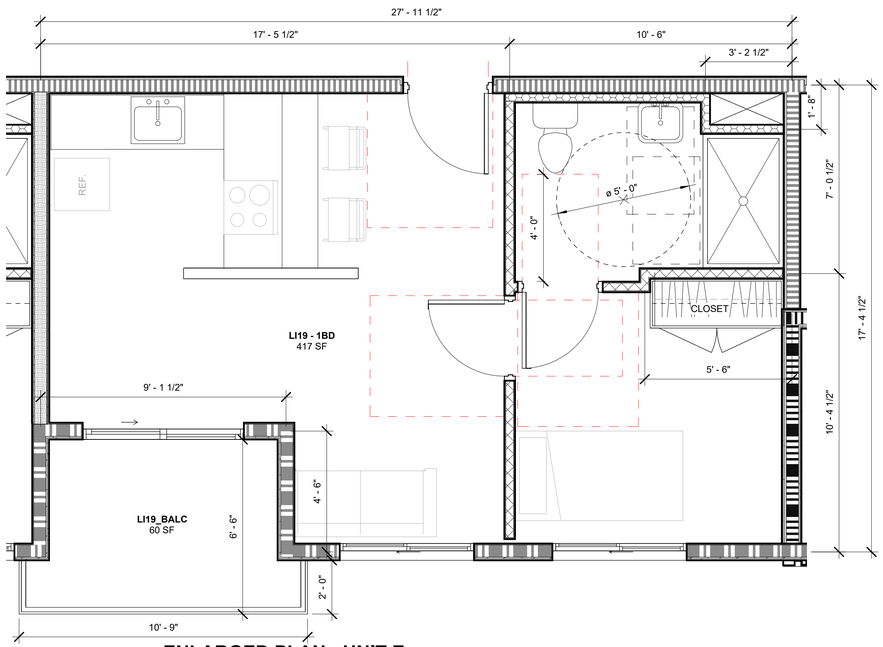

1 **ENLARGED PLAN - UNIT E**
3/8" = 1'-0"

FINISH SCHEDULE

xxx-xx	◄	Room Name
xxxx	◄	Room Number
F-x C-x	◄	Floor / Ceiling Finish
W-x	◄	Walls Finish

WALL FINISH	W-A	5/8" DRYWALL – PTD. WHITE [SATIN] WOOD TRIMS & BUILT-IN SHELVING - PTD. WHITE [SATIN]	A. SEE DOOR & WINDOW SCHEDULE FOR GLAZING, DOORS AND FRAMES. B. PAINT TO BE BY DUNN & EDWARDS DEW380, RL #005 SATIN FINISH, DEW380 SEMI-GLOSS FINISH AND DEW380 FLAT FINISH. C. ARCHITECT'S APPROVAL REQUIRED FOR EACH OF THE ABOVE PRIOR TO PURCHASE AND INSTALLATION. D. CLASS C INTERIOR FINISH.
	W-B	5/8" DRYWALL – PTD. WHITE [SEMI-GLOSS]. NOTE: PORTION OF WALL BEHIND TUB ACRYLIC WALL SURROUND [CEMENT BOARD CLAD STUDS] NOT TO BE PAINTED	A. SEE DOOR & WINDOW SCHEDULE FOR GLAZING, DOORS AND FRAMES. B. WHITE PAINT TO BE BY DUNN & EDWARDS DEW380, RL #005 SATIN FINISH, DEW380 SEMI-GLOSS FINISH AND DEW380 FLAT FINISH. C. ARCHITECT'S APPROVAL REQUIRED FOR THE ABOVE PRIOR TO PURCHASE AND INSTALLATION. D. CLASS C INTERIOR FINISH. NOTE: PLAN FOR THE CONVERSION OF THE ADA ADAPTABLE BATH INTO THE COMPLIANT VERSION BY INSTALLING THE BACKING IN THE WALLS AS PART OF THE INITIAL CONSTRUCTION TO MINIMIZE THE IMPACT OF ADDING THE REQUIRED GRAB BARS AND PLUMBING CHANGES IN THE FUTURE.
	W-K	5/8" DRYWALL – PTD. WHITE [SATIN]	A. SEE DOOR & WINDOW SCHEDULE FOR GLAZING, DOORS AND FRAMES. B. PAINT TO BE BY DUNN & EDWARDS DEW380, RL #005 SATIN FINISH, DEW380 SEMI-GLOSS FINISH AND DEW380 FLAT FINISH. C. KITCHEN CABINETS AND ISLAND TO BE "EDGELEY WHITE WITH THERMOFOIL FINISH" BY HAMPTON BAY. TO BE INSTALLED WITH KICK BY HAMPTON BAY AND COVED BASE TO MATCH ONE IN ADJACENT SPACES. D. KITCHEN COUNTER TOPS TO BE WHITE QUARTZITE AND MATCH ARCHITECT'S APPROVED SAMPLE. E. ARCHITECT'S APPROVAL REQUIRED FOR EACH OF THE ABOVE PRIOR TO PURCHASE AND INSTALLATION.
FLOOR FINISH	F-1	VINYL SHEET FLOORING WITH DIAMOND #10 TECHNOLOGY BY ARMSTRONG FLOORING, PREMIUM / BETTER QUALITY" AND TO MATCH ARCHITECT'S APPROVED SAMPLE. BASE: 4" VINYL COVE BASE- COLOR TO BE COMPATIBLE WITH FINISHED FLOOR MATERIAL.	
CEILING FINISH	C-1	5/8" DRYWALL – PTD. CEILING WHITE [FLAT]	CLASS C INTERIOR FINISH
	C-2	5/8" DRYWALL – PTD. CEILING WHITE [SEMI-GLOSS]	CLASS C INTERIOR FINISH

NOTE: INTERIOR FINISH MATERIALS APPLIED TO WALL AND CEILINGS SHALL BE TESTED AS SPECIFIED IN SECTION 803.

PLAN LEGEND

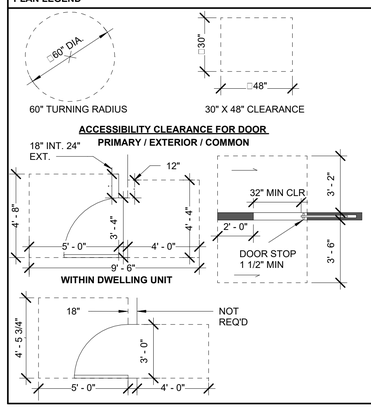

www.ULTRA-UNIT.com
Architectural Studio
www.ULTRA-UNIT.com

Architect:
Ultra-Unit Architectural Studio
1327 Loma Avenue
Long Beach, California 90804
e. cameron@ultra-unit.com

Structural Engineer:
David Choi & Associates
1327 Loma Avenue
Long Beach, California 90804
e. david@dca-se.com

Owner:
Sarah Johnson
1377 N Garey Ave, LP
3982 S Figueroa St, Suite 209
Los Angeles CA, 90037
development@pathway2tomorrow.org

Architect Stamp

LICENSED ARCHITECT
CAMERON CROCKETT
C31503
1.31.2025
RENEWAL DATE
STATE OF CALIFORNIA

Date 10/7/2024

Project:
N GAREY AVE
1377 N GAREY AVE
POMONA, CA

Client Name: SOUTHLAND DEVELOPMENT CO. INC.

Revisions

No.	Description	Date

Sheet Name
ENLARGED PLANS

Sheet Number
A401

Project Number	23-1025
Drawn By	GG
Checked By	CC
Scale	As indicated

C:\Users\User\Desktop\1377 N Garey Ave_ R24_DL_cams.rvt
7/16/2025 11:43:39 AM

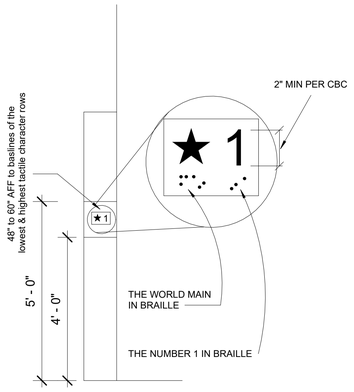

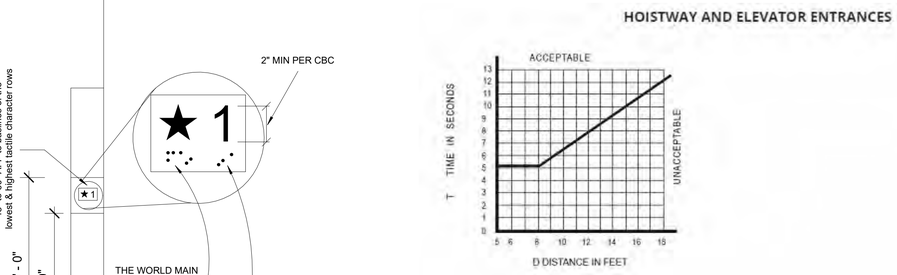

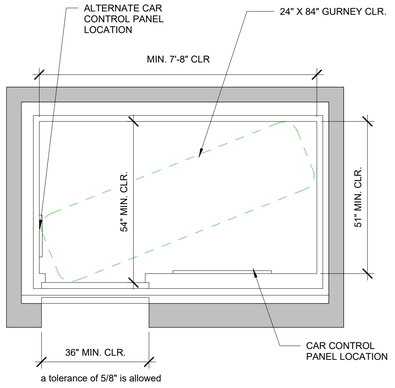

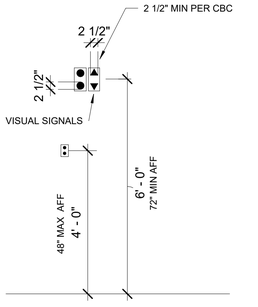

AUDIBLE SIGNALS ONCE FOR UP TWICE FOR DOWN W/FREQ. 1500HZ,10-80 DB

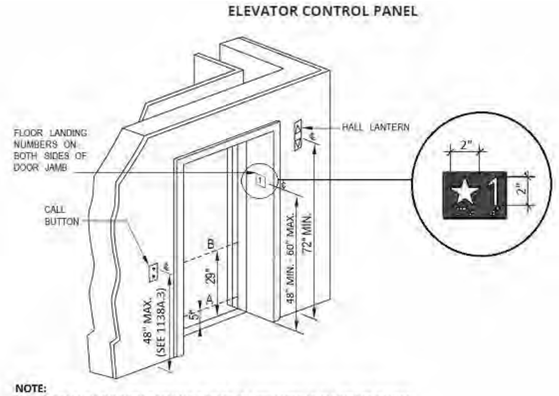

NOTE:
THE AUTOMATIC DOOR REOPENING DEVICE IS ACTIVATED IF AN OBJECT PASSES THROUGH EITHER LINE A OR LINE B. LINE A AND LINE B REPRESENT THE VERTICAL LOCATION OF THE DOOR REOPENING DEVICE NOT REQUIRING CONTACT.

1 ELEVATOR DETAIL
1/2" = 1'-0"

www.ULTRA-UNIT.com
Architectural Studio

www.ULTRA-UNIT.com

Architect:
Ultra-Unit Architectural Studio
1327 Loma Avenue
Long Beach, California 90804
e. cameron@ultra-unit.com

Structural Engineer:
David Choi & Associates
1327 Loma Avenue
Long Beach, California 90804
e. david@dca-se.com

Owner:
Sarah Johnson
1377 N Garey Ave, LP
3982 S Figueroa St, Suite 209
Los Angeles CA, 90037
development@pathway2tomorrow.org

Architect Stamp

LICENSED ARCHITECT
CAMERON CROCKETT
C31503
1.31.2025
RENEWAL DATE
STATE OF CALIFORNIA

Date 10/7/2024

Project:
N GAREY AVE
1377 N GAREY AVE
POMONA, CA

Client Name:
SOUTHLAND DEVELOPMENT CO. INC.

Revisions

No.	Description	Date

Sheet Name
ACCESSIBLE ELEVATOR DETAIL

Sheet Number
A501

Project Number	23-1025
Drawn By	GG
Checked By	CC
Scale	1/2" = 1'-0"

C:\Users\User\Desktop\1377 N Garey Ave _ R24_DL_cams.rvt
7/16/2025 11:43:40 AM

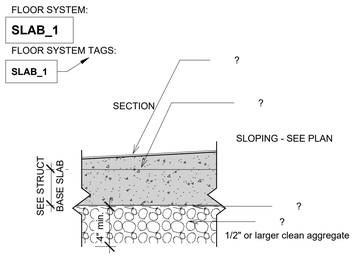

CAST IN PLACE CONCRETE BASIC NOTES:
CONCRETE SHALL BE IN ACCORDANCE WITH AMERICAN CONCRETE INSTITUTE.
CONCRETED STRENGTH AND WEIGHT-REFER TO STRUCTURAL DRAWINGS.

20 SLAB_6
1 1/2" = 1'-0"

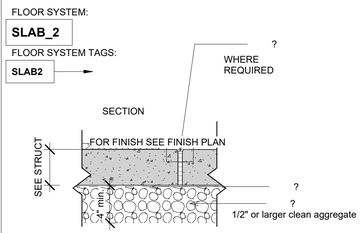

CAST IN PLACE CONCRETE BASIC NOTES:
CONCRETE SHALL BE IN ACCORDANCE WITH AMERICAN CONCRETE INSTITUTE.
CONCRETED STRENGTH AND WEIGHT-REFER TO STRUCTURAL DRAWINGS.
REINFORCING MATERIALS SHALL BE AS WELDED WIRE REINFORMENT ASTM A 185, WELDED STEEL WIRE REINFORCMENT. SHEET TYPE, ROLL TYPE IS NOT PERMITTED.
ALL REINFORCING STEEL AND EMBEDDED ITEMS SUCH AS ANCHOR RODS AND WELD PLATES SHALL BE ACCURATELY PLACED AND ADEQUETY TIED AND SUPPORTED BEFORE CONCRETE IS PLACED TO PREVENT DISPLACEMNT BEYOND PERMITTED TOLERANCES.
CONCRETE COVER TO REINFORCING STEEL SHALL CONFORM TO THE MINIMUM COVER RECOMMENDATIONS IN AMERICAN CONCRETE INSTITUTE, UNLESS OTHERWISE NOTED.
LAP CONTITNOUS REINFORCING STEEL UNLESS OTHERWISE NOTED.

16 SLAB_7
1 1/2" = 1'-0"

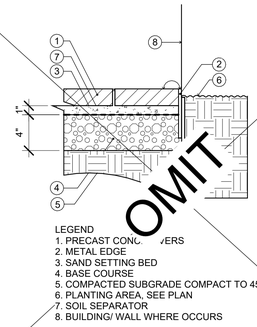

LEGEND
1. PRECAST CONC. PAVERS
2. METAL EDGE
3. SAND SETTING BED
4. BASE COURSE
5. COMPACTED SUBGRADE COMPACT TO 45%
6. PLANTING AREA, SEE PLAN
7. SOIL SEPARATOR
8. BUILDING/ WALL WHERE OCCURS

12 STEEL HEADER @ PAVERS4
1 1/2" = 1'-0"

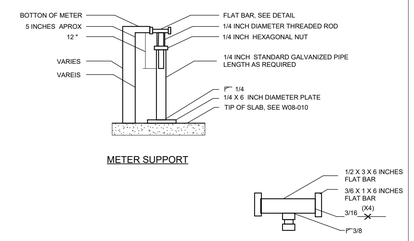

NOTE:
SUPPORTS ABOVE GRADE TO HAVE TWO (2) COATS OF KEYSITE 750, MINIMUM DRY-FILM THICKNESS OF FIVE (5) NILS EACH COAT, FINAL COAT TO BE MINIMUM TEN (10) AND MAXIMUM SIXTEEN (16) NILS.

8 WATER METER SUPPORT4
3" = 1'-0"

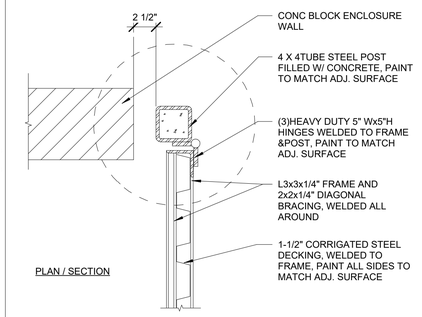

4 TRASH ENCLOSURE DOOR4
1 1/2" = 1'-0"

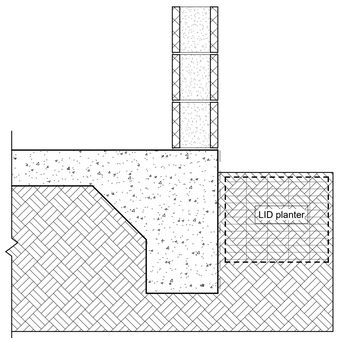

19 LID planter@ meremeter wall
1" = 1'-0"

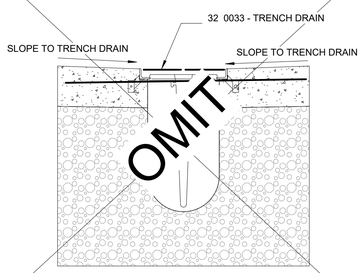

15 TRENCH DRAIN DETAIL1
1" = 1'-0"

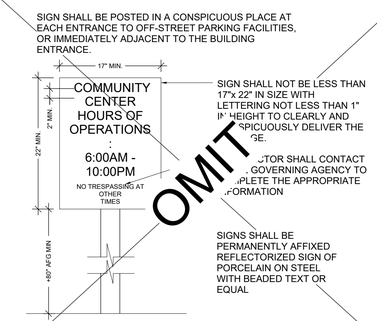

11 HOURS OF OPERATION SIGN4
1" = 1'-0"

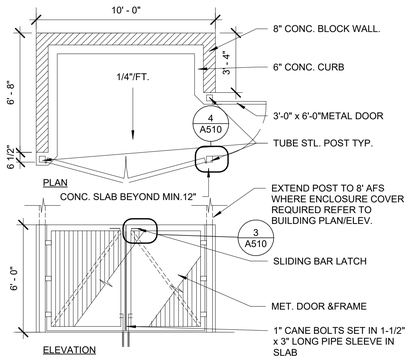

7 TRASH ENCLOSURE4
1/4" = 1'-0"

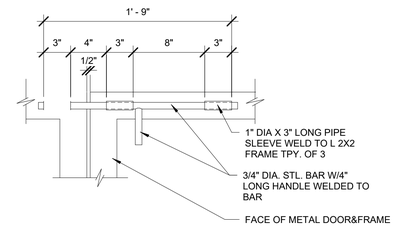

3 SLIDING BAR LATCH
1 1/2" = 1'-0"

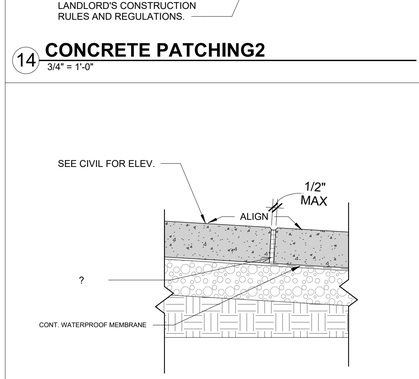

14 CONCRETE PATCHING2
3/4" = 1'-0"

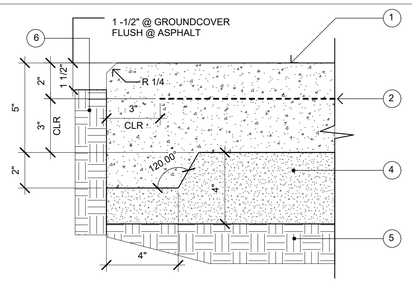

A. PEDESTRIAN LOADING

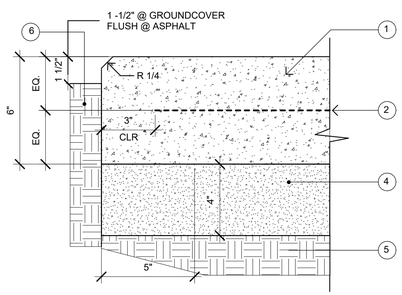

B. VEHICULAR LOADING

LEGEND:
1. CONCRETE PAVING. AS NOTED ON PLAN
2. #4 REBAR @ 18" O.C. EACH WAY
3. #4 REBAR @ 18" O.C. EACH WAY
4. BASE COURSE, COMPACT TO 95%, PER GEOTECH SOILS REPORT
5. COMPACTED SUBGRADE AT LEAST 95% RELATIVE COMPACTION, SCARIFY & RECOMPACT TOP 12" TO A MINIMUM 95% COMPACTION
6. FINISH GRADE

NOTE
A. SEE PLANS FOR SCORING AND JOINT PATTERN, PLACE E.J.'S @ 20' O.C. AND C.J.'S @ 10" O.C.

9 CONCRETE PAVING4
3" = 1'-0"

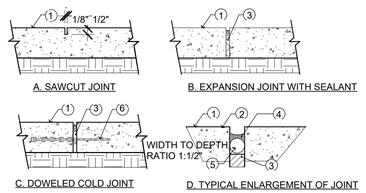

LEGEND:
1. CONCRETE PAVING
2. SAWCUT JOINT
3. PREMOLDED EXPANSION JOINT FILLER
4. SEALANT W/ SAND FINISH - COLOR TO BE SELECTED BY LAND. ARCH. - SUBMIT COLOR SAMPLES PRIOR TO INSTALLATION
5. BACKER ROD
6. 18" SLIP #4 DOWEL @ 36" O.C., CENTER IN CONCRETE

6 PAVING JOINTS
1" = 1'-0"

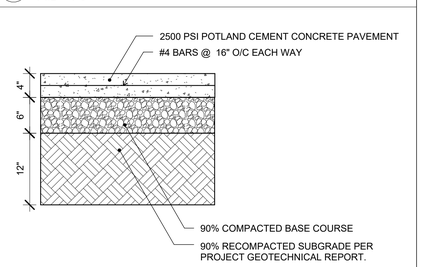

NOTES:
1. ALL TREAD SURFACES SHALL BE SUP-RESISTANT.
2. REFER TO ARCHITECTURAL DRAWINGS FOR COLOR, PATTERN, TEXTURE, AND FINISH.
3. SEE PLAN LOCATION OF CONTROL JOINTS.

2 TYP. CONCRTE @ WALKABLE SURFACE
1" = 1'-0"

13 TPY. EXPANSION JOIST
1 1/2" = 1'-0"

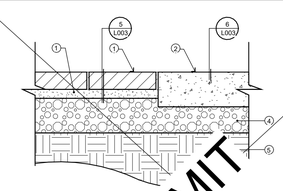

LEGEND:
1. PRECAST CONC. PAVERS
2. F.S. CONC.
3. SAND SETTING BED
4. BASE COURSE PER GEOTECH
5. COMPACTED SUBGRADE PER GEOTECH REPORT

5 PRECAST PAVERS AT CONCRETE
1 1/2" = 1'-0"

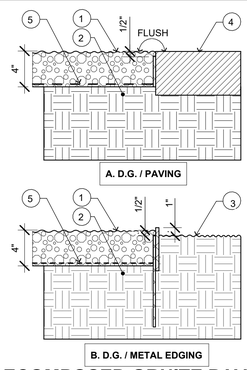

LEGEND:
1. STABIBLIZED DECOMPOSED GRANITE.
2. COMPACTED SUBGRADE PER SOILS REPORT.
3. FINISHED GRADE IN PLANTING AREAS & LAWN.
4. PAVING FINISH SURFACE, SEE PLANS FOR MATERIAL.
5. SOIL SPARATOR.

1 DECOMPOSED GRNITE PAVING
1 1/2" = 1'-0"

www.ULTRA-UNIT.com
Architectural Studio

www.ULTRA-UNIT.com

Architect:
Ultra-Unit Architectural Studio
1327 Loma Avenue
Long Beach, California 90804
e. cameron@ultra-unit.com

Structural Engineer:
David Choi & Associates
1327 Loma Avenue
Long Beach, California 90804
e. david@dca-se.com

Owner:
Sarah Johnson
1377 N Garey Ave, LP
3982 S Figueroa St, Suite 209
Los Angeles CA, 90037
development@pathway2tomorrow.org

Architect Stamp

LICENSED ARCHITECT
CAMERON CROCKETT
C31503
1.31.2025
RENEWAL DATE
STATE OF CALIFORNIA

Date 10/7/2024

Project:
N GAREY AVE
1377 N GAREY AVE
POMONA, CA

Client Name: SOUTHLAND DEVELOPMENT CO. INC.

Revisions

No.	Description	Date
1	Revision 1	Date 1

Sheet Name
SITE DETAILS

Sheet Number
A510

Project Number	23-1025
Drawn By	GG
Checked By	CC
Scale	As indicated

C:\Users\User\Desktop\1377 N Garey Ave _ R24_DL_cams.rvt
7/16/2025 11:43:43 AM

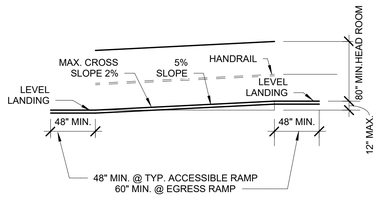

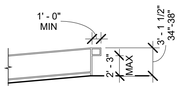

WHEEL GUIDE RAIL TO HAVE A PORTION OF ITS VERTICAL DIMENSION LOCATED AT 4" ABOVE THE RAMP SURFACE FOR THE FULL LENTH OF THE RAMP.

16 SINGLE RAMP COMPONENTS
1/8" = 1'-0"

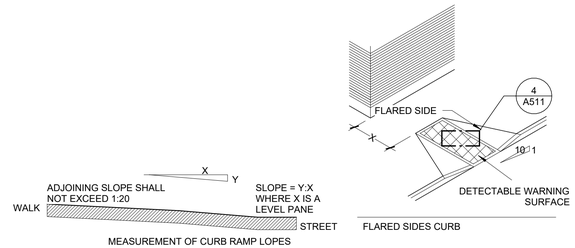

12 SIDES OF CURB RAMPS
1/8" = 1'-0"

IF BOTH SIDE OF THE GRADE BREAK AT THE BOTTOM OF THE CURB RAMP ARE 60" OR LESS FROM THE BACK OF THE CURB PROVIDE DETECTABLE WARNINGS ON THE SURFACE OF THE CURB RAMP PER PROPOSED CA DOT

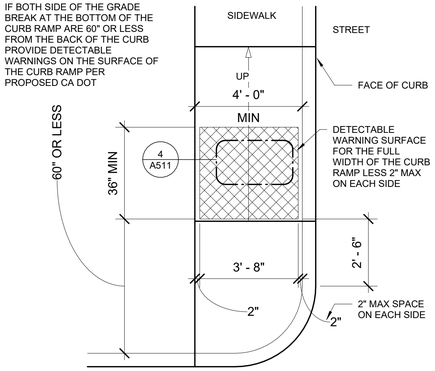

8 DETECTABLE WARNING LOCATIONS
3/8" = 1'-0"

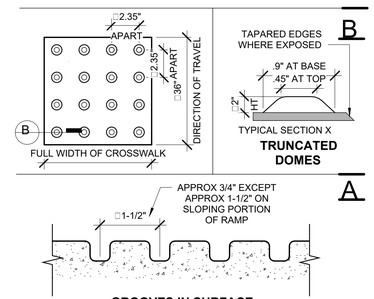

4 TRUNCATED DOMES DETAIL
1/2" = 1'-0"

SLOPE	MAX. RISE INCHES	MAX. HORIZ LENGTH, FT	HANDRAILS REQ'D ?
1:12 (8.33%)	30	30	YES
1:15 (6.67%)	30	37.5	YES
1:20 (5.00%)	30	50	NO

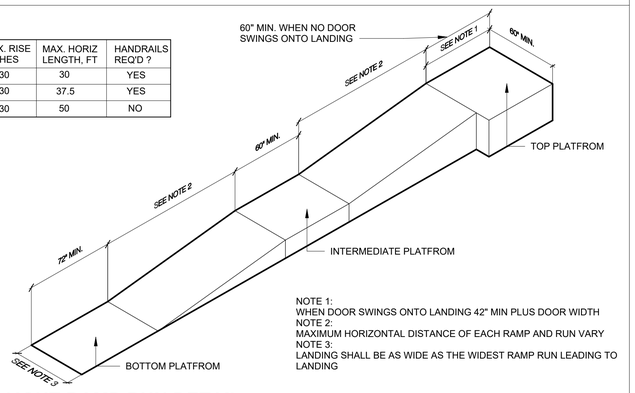

NOTE 1:
WHEN DOOR SWINGS ONTO LANDING 42" MIN PLUS DOOR WIDTH
NOTE 2:
MAXIMUM HORIZONTAL DISTANCE OF EACH RAMP AND RUN VARY
NOTE 3:
LANDING SHALL BE AS WIDE AS THE WIDEST RAMP RUN LEADING TO LANDING

15 STRAIGHT RAMP RUN DETAIL
N.T.S.

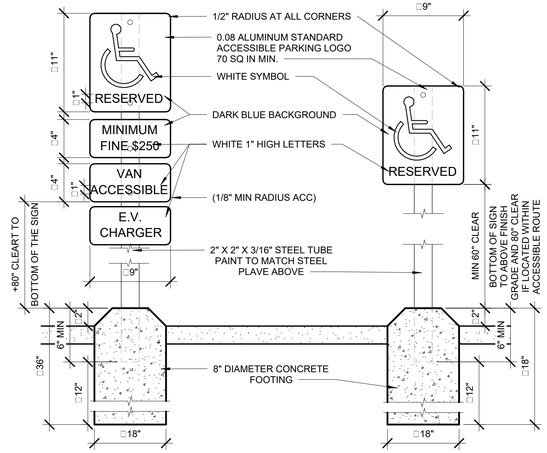

11 ACESSIBLE PARKING SIGN POST MOUNTING
1 1/2" = 1'-0"

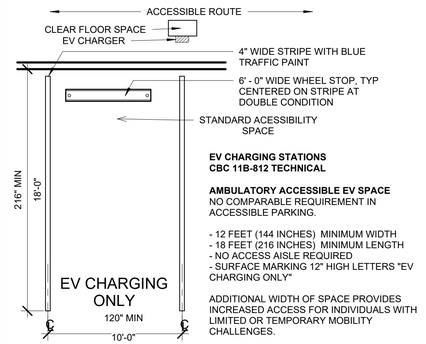

EV CHARGING STATIONS
CBC 11B-812 TECHNICAL

AMBULATORY ACCESSIBLE EV SPACE
NO COMPARABLE REQUIREMENT IN ACCESSIBLE PARKING.

- 12 FEET (144 INCHES) MINIMUM WIDTH
- 18 FEET (216 INCHES) MINIMUM LENGTH
- NO ACCESS AISLE REQUIRED
- SURFACE MARKING 12" HIGH LETTERS "EV CHARGING ONLY"

ADDITIONAL WIDTH OF SPACE PROVIDES INCREASED ACCESS FOR INDIVIDUALS WITH LIMITED OR TEMPORARY MOBILITY CHALLENGES.

7 EV SPACE AMBULATORY ACCESSIBLE
3/16" = 1'-0"

SIGN SHALL BE POSTED IN A CONSPICUOUS PLACE AT EACH ENTRANCE TO OFF-STREET PARKING FACILITIES, OR IMMEDIATELY ADJACENT TO AND VISIBLE FROM EACH STALL OR SPACE. PER TITLE 24 SECTION 1129B.4

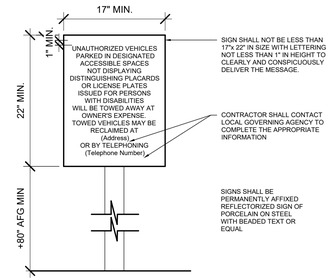

CALIFORNIA TOW AWAY SIGN - CA DOT VERSION R 100B
1" = 1'-0"

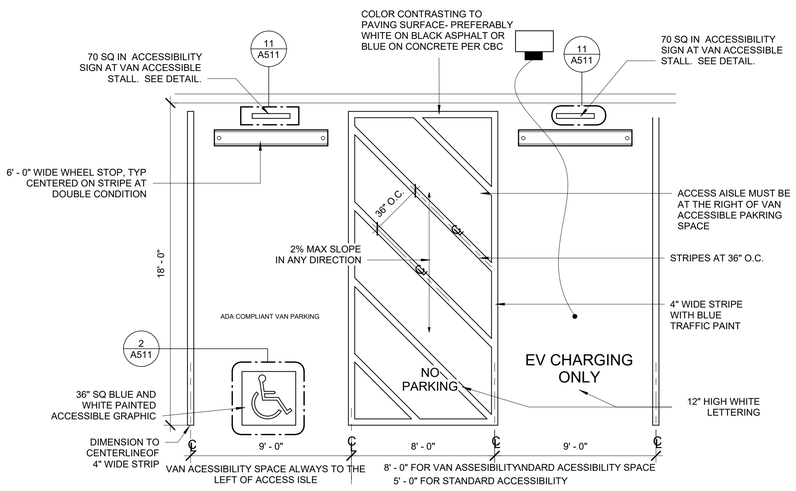

NOTES:
1. 2% MAX SLOPE IN ANY DIRECTION AT ENTIRE ACCESSIBLE PARKING AREA
2. 5' - 0" MIN AT TYP ACCESSIBLE PARKING STALL. 8' - 0" MIN AT VAN ACCESSIBLE PARKING STALL

13 ACCESSIBLE PARKING STALLS - NO CURB
1/4" = 1'-0"

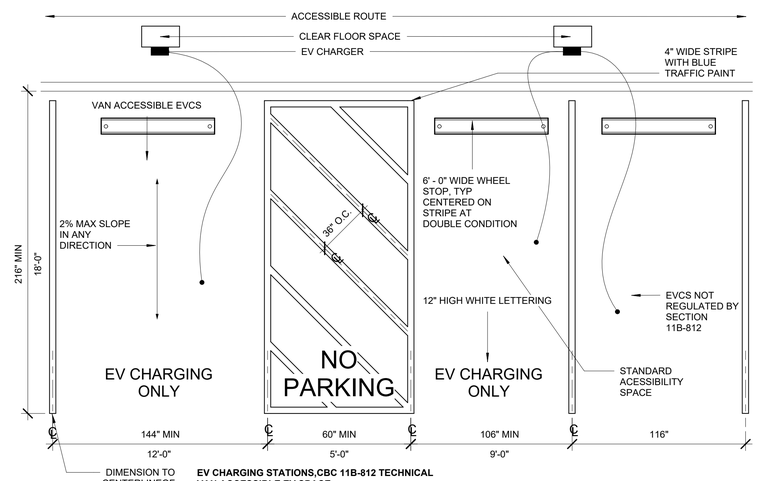

EV CHARGING STATIONS,CBC 11B-812 TECHNICAL
VAN ACCESSIBLE EV SPACE
SIMILAR CONFIGURATION TO VAN ACCESSIBLE PARKING SPACE.
- 12 FEET (144 INCHES) MINIMUM WIDTH
- 18 FEET (216 INCHES) MINIMUM LENGTH
- ACCESS AISLE 5 FEET (60 INCHES) MINIMUM WIDTH LOCATED ON PASSENGER SIDE WITH HEAD-IN PARKING
- SURFACE MARKING 12" HIGH LETTERS "EV CHARGING ONLY"

9 FEET STALL/8 FEET ACCESS AISLE IS NOT PERMITTED FOR EV SPACE

9 EV SPACE VAN ACCESSIBLE
1/4" = 1'-0"

THIS PROFILE VIEW SHALL BE LOCATED SO THAT IT IS VISIBLE TO A TRAFFIC ENFORCEMENT. OFFICER WHEN A VEHICLE IS PROPERLY PARKED IN THE SPACE AND SHALL BE 36 INCHES.HIGH BY 36 INCHES WIDE.USE APPROVED TRAFIC PAINT.

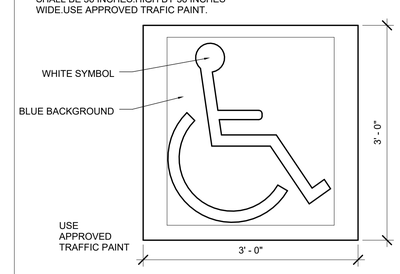

2 ACCESSIBILITY SYMBOL AT PARKING SPACE
1" = 1'-0"

1 ACCESSIBLE ENTRACE SIGN
3/4" = 1'-0"

www.ULTRA-UNIT.com
Architectural Studio
www.ULTRA-UNIT.com

Architect:
Ultra-Unit Architectural Studio
1327 Loma Avenue
Long Beach, California 90804
e. cameron@ultra-unit.com

Structural Engineer:
David Choi & Associates
1327 Loma Avenue
Long Beach, California 90804
e. david@dca-se.com

Owner:
Sarah Johnson
1377 N Garey Ave, LP
3982 S Figueroa St, Suite 209
Los Angeles CA, 90037
development@pathway2tomorrow.org

Architect Stamp

LICENSED ARCHITECT
CAMERON CROCKETT
C31503
1.31.2025
RENEWAL DATE
STATE OF CALIFORNIA

Date 10/7/2024

Project:
N GAREY AVE
1377 N GAREY AVE
POMONA, CA

Client Name:
SOUTHLAND DEVELOPMENT CO. INC.

Revisions

No.	Description	Date
1	Revision 1	Date 1

Sheet Name
SITE DETAILS - ACCESSBILE PARKING

Sheet Number
A511

Project Number	23-1025
Drawn By	GG
Checked By	CC
Scale	As indicated

7/16/2025 11:43:45 AM C:\Users\User\Desktop\1377 N Garey Ave _ R24_DL_cams.rvt

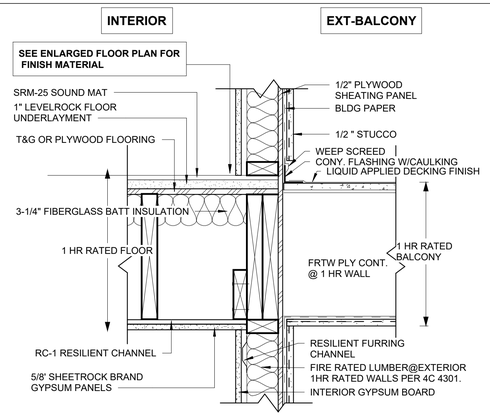

F2 - UL569 - 1 HR FLOOR CONNECT TO EXT 2 - U356 - 1 HR WALL

11 1 HR BALCONY FLOOR @ 1 HR EXTERIOR WALL
1 1/2" = 1'-0"

WALL SYSTEM:

EXTERIOR STUCCO

WALL SYSTEM TAGS:

EXST##

EXTERIOR PLASTER NOTES:
IN ACCORDANCE TO 2010 C.B.C SECTION 2512: PLASTERING WITH CEMENT PLASTER SHALL BE NOT LESS THAN THREE COATS WHEN APPLIED OVER METAL LATH OR WIRE FABRIC LATH OR GYPSUM BOARD BACKING AS SPECIFIED IN SECTION 2510.5 AND SHALL BE NOT LESS THAN TWO COATS WHEN APPLIED OVER MASONRY OR CONCRETE. IF THE PLASTER SURFACE IS TO BE COMPLETELY COVERED BY VENEER OR OTHER FACING MATERIAL, OR IS COMPLETELY CONCEALED BY ANOTHER WALL, PLASTER APPLICATION NEED ONLY BE TWO COATS, PROVIDED THE TOTAL THICKNESS IS AS SET FORTH IN ASTM C 926.

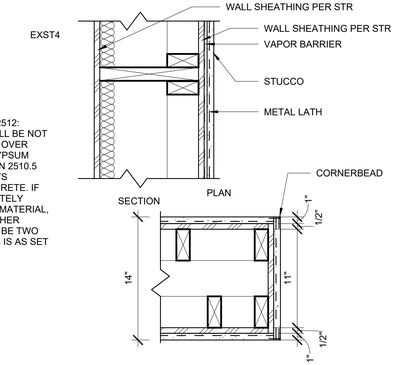

9 2X WALL @ VERTICAL FINS
1 1/2" = 1'-0"

EXTERIOR TRESPA PANEL

WALL SYSTEM TAGS:

EXT 1

TRS1 DENOTES YELLOW FINISH COLOR
A04.0.5 ZINC YELLOW

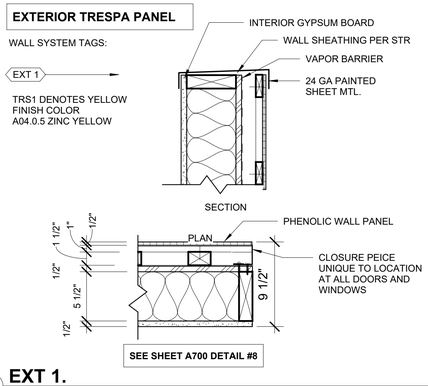

SEE SHEET A700 DETAIL #8

5 EXT 1.
1 1/2" = 1'-0"

EXTERIOR 1HR STUCCO WALL

WALL SYSTEM TAGS:

EXT 2

TEST ASSEMBLY UL.	U356
FULL HEIGHT WOOD STUDS	
FIRE RATING	1HR
TOTAL THICKNESS	VARIES
STC	63

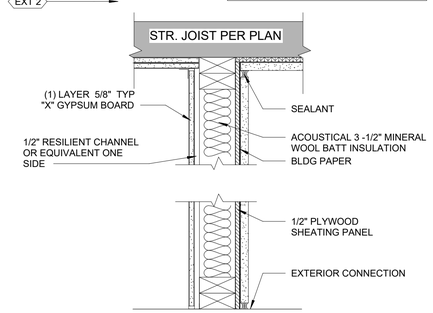

6 EXT 2
1 1/2" = 1'-0"

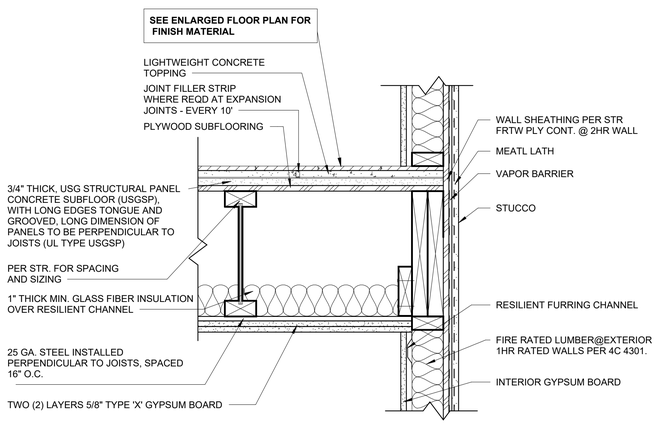

UL570-1 HR FLOOR CONNECT TO U356-1 HR WALL

12 1 HR INTERIOR FLOOR @ 1 HR EXTERIOR WALL-TJI
1 1/2" = 1'-0"

VAPROSHIELD EXT 1

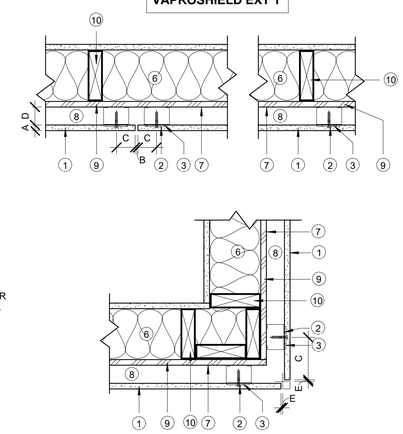

LEGEND	
1	TRESPA® PURA NFC® PANEL
2	COUNTER SUNK SCREW (WURTH 3.5 30/25, AW 20)
3	UNIVERSAL CLIP
6	INSULATION
7	UV VAPROSHIELD RAIN SCREEN
8	VENTILATED CAVITY
9	PLYWOOD PER STR. (5/8" min)
10	2x FRAMING PER TSR

GENERAL INFOEMATION	
A	PANEL THICKNESS 8mm
B	JOINT WIDTH 8mm
C	EDGE CLEARANCE min. 20mm, max. 10 x PANEL THICKNESS
D	VENTILATION min 20mm RECOMMENDED max. CAVITY DEPTH (BETWEEN RAINSCREEN CLADDING AND INSULATION) : 50mm. VENTILATION INLETS AND OUTLETS min. 50cm²/m
E	DISTANCE min. 5mm

10 VAPROSHIELD EXT 1
1 1/2" = 1'-0"

EXTERIOR 2HR STUCCO WALL

WALL SYSTEM TAGS:

EXT 4

TEST ASSEMBLY UL.	UL263-DES U301
FULL HEIGHT WOOD STUDS	
FIRE RATING	2HR
TOTAL THICKNESS	9" (2x6)
STC	62

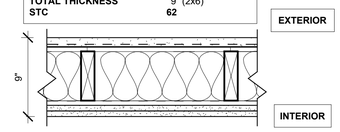

ASSEMBLY OPTIONS:
-STUCCO FINISHING
-5/8" SHEETROCK TYPE X EXTERIOR SHEATHING, FIBEROCK AQUA-TOUGH EXTERIOR SHEATHING OR SECUROCK GLASS-MAT SHEATHING, ON EXTERIOR SIDE
-BATTS AND BLANKET: NOM 2 IN. THICK MINERAL WOOL INSULATION, 96 IN. LONG, CUT TO 15IN. WIDTH, FRICTION FITTED BETWEEN STUDS IN WALL CAVITY.
-JOINT TAPE AND COMPOUND-VINYL,DRY OR PREMIXED JOINT COMPOUND,APPLIED TO JOINTS,SCREW HEADS, AND NAIIL HEADS; PAPER TAPE EMBEDDED IN FIRST LAYER OF COMPOUND OVER ALL JOINTS.
-2X6 PYRO-GUARD FIRE-RETARDANT WOOD LUMBER @ 16" O.C
-RESILIENT CHANNEL, 25 MSG GALV STEEL INSTALLED HORIZONTALLY SPACED 24 IN O.C.
-TWO LAYERS 5/8" Type X Gypsum Wallboard

7 EXT 4
1 1/2" = 1'-0"

WALL TYPE SCHEDULE

#	STRUCTURAL MATERIAL	EXTERIOR FINISH MATERIAL	INTERIOR FINISH MATERIAL	THICKNESS	INSULATION	R VALUE	FIRE RATING	STC	TYPE	HATCH
EXT1	2 X 6 WOOD STUDS	LA HABRA STUCCO	GYPSUM	7/8" STUCCO 5/8" GYP.	BATT	R-19	2HR	50	EXTERIOR	
INT1	2X STGR STUD	NA	GYPSUM	5/8" GYP.	BATT	R-11	1HR	51	PARTY WALL	
INT2	2 X 4 WOOD STUD	NA	GYPSUM	5/8" GYP.	NA	NA	NR	33	PARTITION WALLS	
INT3	2 X 6 WD. STUD	NA	GYPSUM	5/8" GYP.	NA	NA	1HR	50	1HR FIRE SPERATION	
INT4	2 X 6 WD. STUD	NA	GYPSUM	5/8" GYP.	NA	NA	2HR	63	2HR FIRE SPERATION	
INT5	2 X 6 WD. STUD	NA	GYPSUM	5/8" GYP.	NA	NA	NR	-	PLUMBING WALL	
INT6	MTL STUD, CHANNEL	NA	GYPSUM	5/8" GYP.	NA	NA	2HR		SHAFT WALLS	

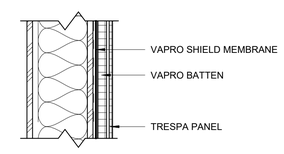

VAPRO BATTEN IS UV STABLE FOR USE WITH RAIN SCREEN DESIGN APPLICATIONS
VAPRO BATTEN CAN BE INSTALLED OVER VAPRO SHIELD MEMBRANES USING CONVENTIONAL CONSTRUCTION.

8 EXT 1 VAPRO VENT
1 1/2" = 1'-0"

www.ULTRA-UNIT.com

Architect:
Ultra-Unit Architectural Studio
1327 Loma Avenue
Long Beach, California 90804
e. cameron@ultra-unit.com

Structural Engineer:
David Choi & Associates
1327 Loma Avenue
Long Beach, California 90804
e. david@dca-se.com

Owner:
Sarah Johnson
1377 N Garey Ave, LP
3982 S Figueroa St, Suite 209
Los Angeles CA, 90037
development@pathway2tomorrow.org

Architect Stamp

LICENSED ARCHITECT
CAMERON CROCKETT
C31503
1.31.2025
RENEWAL DATE
STATE OF CALIFORNIA

Date 10/7/2024

Project:
N GAREY AVE
1377 N GAREY AVE
POMONA, CA

Client Name:
SOUTHLAND DEVELOPMENT CO. INC.

Revisions

No.	Description	Date

Sheet Name
EXTERIOR WALL SYSTEMS

Sheet Number
A700

Project Number	23-1025
Drawn By	GG
Checked By	CC
Scale	As indicated

C:\Users\User\Desktop\1377 N Garey Ave _ R24_DL_cams.rvt
7/16/2025 11:43:47 AM

INTERIOR FIRE RATED WALL

WALL SYSTEM TAGS:

INT4

TEST ASSEMBLY UL.	**U301**
FULL HEIGHT WOOD STUDS	
FIRE RATING	**2HR**
TOTAL THICKNESS	6" (2x4)
STC	**NR**

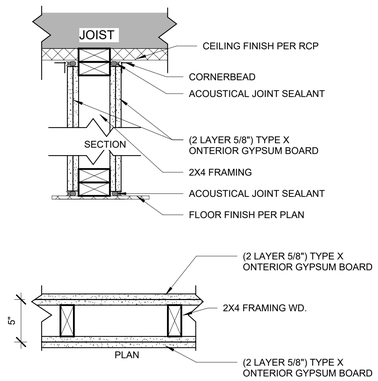

4 INT 4 - 2HR RATED WALL
1 1/2" = 1'-0"

INTERIOR FIRE RATED WALL

WALL SYSTEM TAGS:

INT3

TEST ASSEMBLY UL.	**U314**
FULL HEIGHT WOOD STUDS	
FIRE RATING	**1HR**
TOTAL THICKNESS	4 3/4" (2x4)
STC	**37**

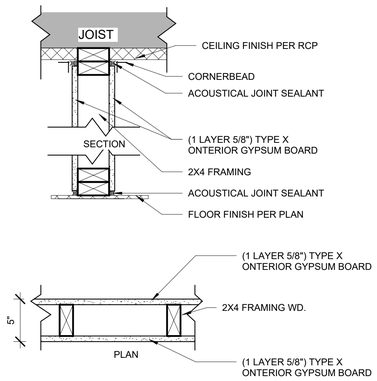

3 INT 3 - 1HR RATED WALL
1 1/2" = 1'-0"

INTERIOR PARTITION WALL

WALL SYSTEM TAGS:

INT2

TEST ASSEMBLY UL.	**NR**
FULL HEIGHT WOOD STUDS	
FIRE RATING	**NR**
TOTAL THICKNESS	**4 3/4" (2x4)**
STC	**33**

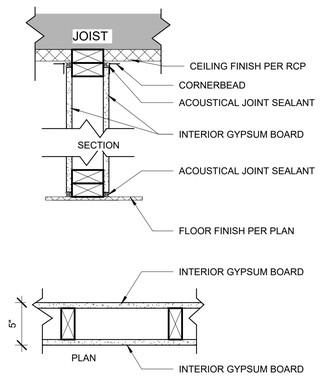

2 INT 2 - PARTION WALL
1 1/2" = 1'-0"

INTERIOR PARTY WALL

WALL SYSTEM TAGS:

INT1

TEST ASSEMBLY UL.	**WHI-495-0505**
FULL HEIGHT WOOD STUDS	
FIRE RATING	**2HR**
TOTAL THICKNESS	**8 1/2"**
STC (REPORT #SA840523)	**50**

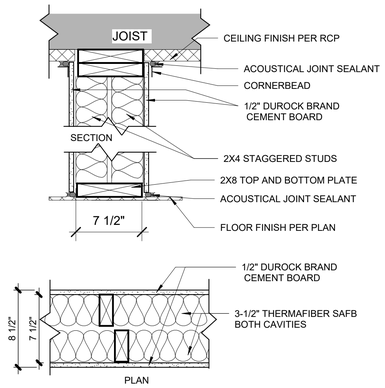

1 INT 1 - PARTY WALL
1 1/2" = 1'-0"

INTERIOR PARTION NOTES & FLOOR ASSEMBLY NOTES:

1. REFER TO GENERAL NOTES AND SPECIFICATION FOR THERMAL AND SOUND BATT INFORMATION
2. REFER TO UL MANUAL FOR FIRE RATED APPROVAL NUMBERS. SEE GYPSUM ASSOCIATION FIRE RESISTANCE / SOUND CONTROL MANUAL FOR "WP" SOUND RATED APPROVALS. SEE EACH RESPECTIVE MANUAL FOR COMPLETE DESCRIPTION OF PARTITION CONSTRUCTION NECESSARY TO ACHIEVE REQUIRED RATINGS. TYPE WITH UL OR GA ASSEMBLY.
3. WHERE INTERIOR PARTITION TERMINATES AGAINST THE CONCRETE STRUCTURE -SEAL TO CONCRETE TO PROVIDE CONTINUITY OF FIRE AND SOUND RATING.
4. ALL PENETRATIONS THROUGH RATED WALL ASSEMBLIES SHALL BE PROTECTED WITH INTUMESCENT FIRE MATERIAL.
5. METALLIC OUTLET BOXES SHALL BE PERMITTED TO BE INSTALLED IN STEEL STUD INTERIOR PARTITIONS HAVING GYPSUM BOARD FACINGS AND CLASSIFIED AS TWO-HOUR OR LESS WITHOUT AFFECTING THE FIRE RESISTANCE RATING. THE SURFACE AREA OF INDIVIDUAL BOXES SHALL NOT EXCEED 16 SQUARE INCHES. THE AGGREGATE SURFACE AREA OF THE SQUARE FEET. BOXES LOCATED ON OPPOSITE SIDES OF INTERIOR PARTITIONS SHALL BE SEPARATED BY A MINIMUM HORIZONTAL DISTANCE OF 24" INCHES.
6. CONTRACTOR SHALL PROVIDE, LOCATE AND INSTALL MIN. 20 MIN GA. METAL BACKING THROUGHOUT THE PROJECT FOR THE ATTACHMENT AND SUPPORT OF BUILDING FEATURES INCLUDING (BUT NOT LIMITED TO) SIDING, PLUMBING FIXTURES, FRP TRIM, MILLWORK, GRAB BARS, HANDRAILS AND LIGHT FIXTURES.
7. FIRE BLOCKING MUST BE PROVIDED IN ACCORDANCE WITH 2010 C.B.C. SECTION R302.11 IN THE FOLLOWING LOCATIONS:
   A. IN CONCEALED SPACES OF STUD WALLS AND PARTITIONS, INCLUDING FURRED SPACES AT THE CEILING AND FLOOR LEVELS.
   B. IN CONCEALED SPACES OF STUD WALLS AND PARTITIONS, INCLUDING FURRED SPACES AT 10-FOOT INTERVALS ALONG THE LENGTH OF THE WALL
   C. AT ALL INTERCONNECTIONS BETWEEN CONCEALED VERTICAL AND HORIZONTAL SPACES SUCH AS OCCUR AT SOFFITS, DROP CEILINGS AND COVERED CEILINGS.
   D. IN CONCEALED SPACES BETWEEN STAIR STRINGERS AT THE TOP AND BOTTOM OF THE RUN AND BETWEEN STUDS ALONG AND IN LINE WITH THE RUN OF STAIRS IF THE WALL UNDER THE STAIRS IS UNFINISHED
   E. IN OPENINGS AROUND VENTS, PIPES, DUCTS, CHIMNEYS, FIREPLACES AND SIMILAR OPENING WHICH AFFORD A PASSAGE FOR FIRE AT CEILING AND FLOOR LEVELS, WITH NONCOMBUSTIBLE MATERIALS

TEST ASSEMBLY UL.	**U499, W419**

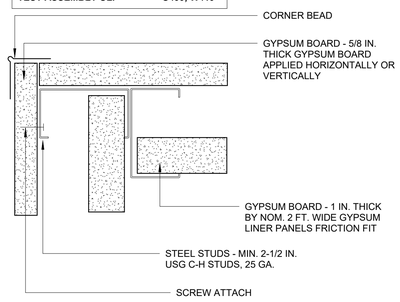

8 INT 6 - SHAFT WALL- OUTSIDE CORNER
6" = 1'-0"

INTERIOR FIRE RATED WALL -STC62

WALL SYSTEM TAGS:

INT4B

TEST ASSEMBLY UL.	**U334**
FULL HEIGHT WOOD STUDS,	**RC-1 CHANNEL**
FIRE RATING	**2HR**
TOTAL THICKNESS	6 1/2" (2x4)
STC	**62**
USG-810219	

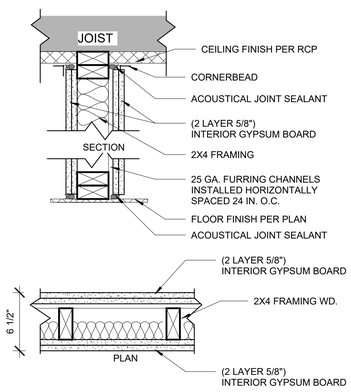

7 INT 4 - 2HR ACOUSTICAL
1 1/2" = 1'-0"

INTERIOR SHAFT WALL

WALL SYSTEM TAGS:

INT6

TEST ASSEMBLY UL.	**U415**
FULL HEIGHT METAL STUDS	
FIRE RATING	**2HR**
TOTAL THICKNESS	**3 1/8"**
STC	**N/A**

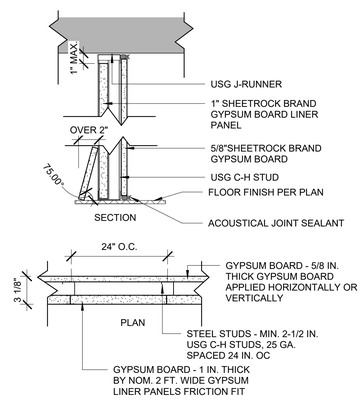

6 INT 6 - SHAFT WALL
1 1/2" = 1'-0"

INTERIOR PLUMBING WALL

WALL SYSTEM TAGS:

INT 5

TEST ASSEMBLY UL.	**NR**
FULL HEIGHT WOOD STUDS	
FIRE RATING	**NR**
TOTAL THICKNESS	7 1/2" (2x6)
STC	**NR**

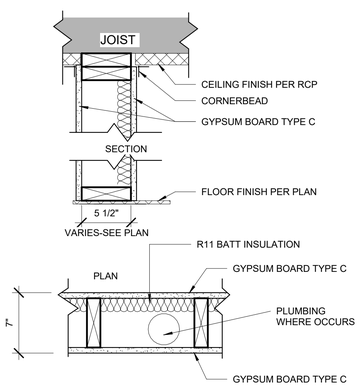

5 INT 5 - PLUMBING WALL
1 1/2" = 1'-0"

www.ULTRA-UNIT.com

Architect:
Ultra-Unit Architectural Studio
1327 Loma Avenue
Long Beach, California 90804
e. cameron@ultra-unit.com

Structural Engineer:
David Choi & Associates
1327 Loma Avenue
Long Beach, California 90804
e. david@dca-se.com

Owner:
Sarah Johnson
1377 N Garey Ave, LP
3982 S Figueroa St, Suite 209
Los Angeles CA, 90037
development@pathway2tomorrow.org

Architect Stamp

LICENSED ARCHITECT
CAMERON CROCKETT
C31503
1.31.2025
RENEWAL DATE
STATE OF CALIFORNIA

Date 10/7/2024

Project: **N GAREY AVE**
1377 N GAREY AVE
POMONA, CA

Client Name: SOUTHLAND DEVELOPMENT CO. INC.

Revisions

No.	Description	Date

Sheet Name
INTERIOR WALL SYSTEMS

Sheet Number
A701

Project Number	23-1025
Drawn By	GG
Checked By	CC
Scale	As indicated

C:\Users\User\Desktop\1377 N Garey Ave _ R24_DL_cams.rvt
7/16/2025 11:43:49 AM

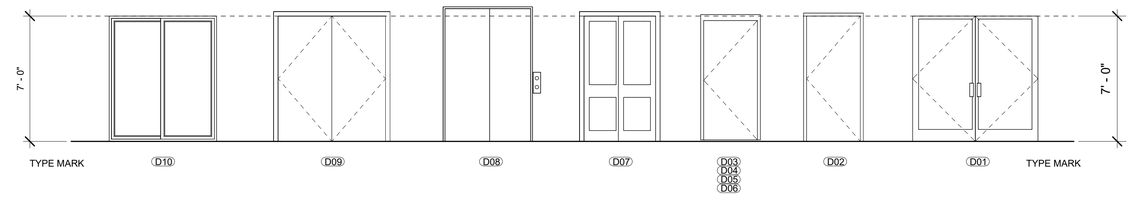

Door Schedule.						
Type Mark	Count	Height	Width	Fire Rating	DESCRIPTION	COMMENTS
D01	2	7' - 0"	6' - 0"	45MIN		
D02	9	7' - 0"	3' - 0"	45MIN		
D03	40	7' - 0"	3' - 0"	20 MIN		
D04	9	7' - 0"	3' - 0"	90MIN		
D05	2	7' - 0"	3' - 0"	-		
D06	86	7' - 0"	2' - 10"	-		
D07	39	7' - 0"	4' - 0"	-		
D08	4	7' - 6"	4' - 0"	90MIN		ELEVATOR DOOR
D09	1	7' - 0"	6' - 0"	45MIN		
D10	26	7' - 0"	6' - 0"	-		

www.ULTRA-UNIT.com

Architect:
Ultra-Unit Architectural Studio
1327 Loma Avenue
Long Beach, California 90804
e. cameron@ultra-unit.com

Structural Engineer:
David Choi & Associates
1327 Loma Avenue
Long Beach, California 90804
e. david@dca-se.com

Owner:
Sarah Johnson
1377 N Garey Ave, LP
3982 S Figueroa St, Suite 209
Los Angeles CA, 90037
development@pathway2tomorrow.org

Architect Stamp

LICENSED ARCHITECT
CAMERON CROCKETT
C31503
1.31.2025
RENEWAL DATE
STATE OF CALIFORNIA

Date 10/7/2024

Project:
N GAREY AVE
1377 N GAREY AVE
POMONA, CA

Client Name: SOUTHLAND DEVELOPMENT CO. INC.

Revisions

No.	Description	Date

Sheet Name
DOOR SCHEDULE

Sheet Number
A800

Project Number	23-1025
Drawn By	GG
Checked By	CC
Scale	1/4" = 1'-0"

7/16/2025 11:43:50 AM C:\Users\User\Desktop\1377 N Garey Ave_ R24_DL_cams.rvt

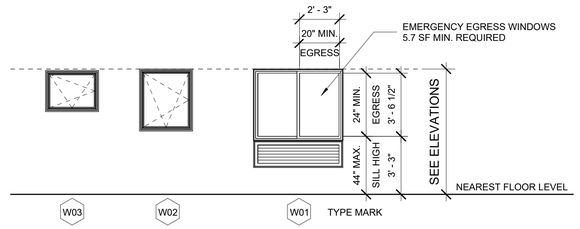

NOTE WINDOWS SHALL BE RECESSED A MINIMUM OF THREE (3) INCHES. ADDITIONALLY, WINDOWS AND OTHER OPENINGS SHALL CONTRIBUTE TO 40 PERCENT OF EACH SUCCESSIVE FLOORS ABOVE THE GROUND FLOOR (SECOND, THIRD AND FOURTH FLOORS) AS SHOWN IN EXHIBIT "A."

WHERE GLAZED OPENINGS ARE PROVIDED IN ACCESSIBLE ROOMS OR SPACES FOR OPERATION BY OCCUPANTS, AT LEAST ONE OPENING SHALL COMPLY WITH SECTION 1138A.4. 30" X 48" CLEAR SPACE FOR FORWARD OR PARALLEL APPROACH, REACH RANGES 15 " TO 48" , REQUIRED FORCE TO OPERATE CONTROLS NO GREATER THAN 5 POUNDS

FOR 5.7 SQ.FT.
(REQ'D. UNLESS FOR GROUND FLOOR)

SINGLE CASEMENT	SINGLE / DOUBLE HUNG	SLIDER
2-4 X 4-0	3-0 X 5-0	4-0 X 4-0
2-6 X 3-6	3-0 X 5-6	5-0 X 3-6
DOUBLE CASEMENT	2-4 X 6-8	6-0 X 3-0
4-8 X 4-0	2-6 X 6-2	
5-0 X 3-0	2-8 X 5-8	

NEW FOR 2007 CBC - FOR 5.0 SQ.FT.
(GROUND FLOOR)

SINGLE CASEMENT	SINGLE / DOUBLE HUNG	SLIDER
2-4 X 3-6	2-9 X 5-0	4-0 X 3-6
2-6 X 3-0	3-0 X 4-8	5-0 X 3-0
DOUBLE CASEMENT	2-4 X 5-8	6-0 X 3-0
4-8 X 3-6	2-6 X 5-0	
5-0 X 3-0	2-8 X 5-2	

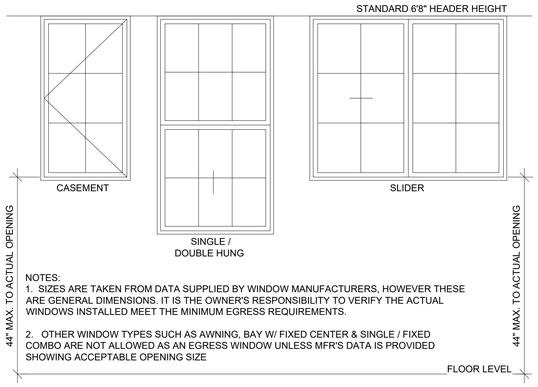

NOTES:
1. SIZES ARE TAKEN FROM DATA SUPPLIED BY WINDOW MANUFACTURERS, HOWEVER THESE ARE GENERAL DIMENSIONS. IT IS THE OWNER'S RESPONSIBILITY TO VERIFY THE ACTUAL WINDOWS INSTALLED MEET THE MINIMUM EGRESS REQUIREMENTS.

2. OTHER WINDOW TYPES SUCH AS AWNING, BAY W/ FIXED CENTER & SINGLE / FIXED COMBO ARE NOT ALLOWED AS AN EGRESS WINDOW UNLESS MFR'S DATA IS PROVIDED SHOWING ACCEPTABLE OPENING SIZE

EMERGENCY ESCAPE / EXIT WINDOW FOR BEDROOMS

CBC SEC. 1026 REQUIREMENTS:
1. 20" MIN. CLEAR WIDTH
2. 24" MIN. CLEAR HEIGHT
3. 5.7 SQ.FT. MIN. OPENABLE AREA (EXCEPT FOR GROUND FLOOR)
4. 5.0 SQ. FT. MIN OPENABLE AREA FOR GROUND LFOOR

ESCAPE WINDOWS:
CALL OUT "EGRESS" OR "ESCAPE" WINDOWS ON FLOOR PLANS. PROVIDE EACH BEDROOM BELOW 4TH FLOOR AND BASEMENTS WITH AN EMERGENCY ESCAPE OPENING. MINIMUM NET CLEAR OPENING AREA SHALL BE 5.7 SQ.FT. (OR 5.0 SQ.FT. FOR GRADE FLOOR OPENINGS.) OPENING HEIGHT SHALL BE 24" MINIMUM CLEAR AND OPENING WIDTH SHALL BE 20" MINIMUM CLEAR. MAXIMUM OPENING SILL HEIGHT SHALL BE 44 TO ACTUAL WINDOW OPENING, CBC SEC, 1026

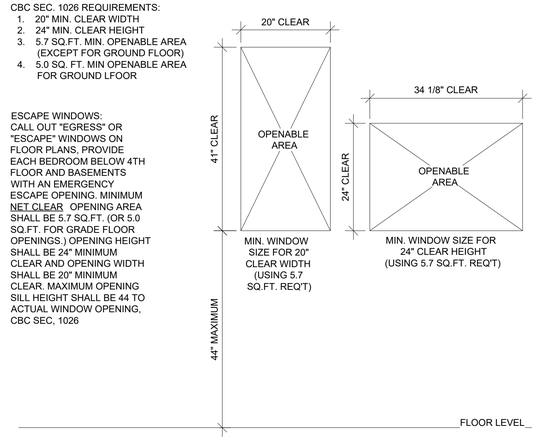

1 EGRESS WINDOW DETAIL
NOT TO SCALE

Window Schedule									
Type Mark	Count	Width	Height	Manufacturer	Series	Type	Material	Finish	Description.
LEVEL 1									
W01	19	5' - 0"	4' - 0"	® 2017 Milgard Manufacturing, Inc.	C650	SLIDING	FIBERGLASS	PAINT	CLEAR GLASS
W02	1	2' - 11 1/2"	3' - 5 1/2"	© 2012 Milgard Manufacturing, Inc.	C650	SLIDING	FIBERGLASS	PAINT	CLEAR GLASS
W03	4	2' - 11 1/2"	2' - 3 1/2"	© 2012 Milgard Manufacturing, Inc.	C650	SLIDING	FIBERGLASS	PAINT	CLEAR GLASS
LEVEL 2									
W01	14	5' - 0"	4' - 0"	® 2017 Milgard Manufacturing, Inc.	C650	SLIDING	FIBERGLASS	PAINT	CLEAR GLASS
W02	1	2' - 11 1/2"	3' - 5 1/2"	© 2012 Milgard Manufacturing, Inc.	C650	SLIDING	FIBERGLASS	PAINT	CLEAR GLASS
W03	4	2' - 11 1/2"	2' - 3 1/2"	© 2012 Milgard Manufacturing, Inc.	C650	SLIDING	FIBERGLASS	PAINT	CLEAR GLASS
LEVEL 3									
W01	13	5' - 0"	4' - 0"	® 2017 Milgard Manufacturing, Inc.	C650	SLIDING	FIBERGLASS	PAINT	CLEAR GLASS
W02	1	2' - 11 1/2"	3' - 5 1/2"	© 2012 Milgard Manufacturing, Inc.	C650	SLIDING	FIBERGLASS	PAINT	CLEAR GLASS
W03	4	2' - 11 1/2"	2' - 3 1/2"	© 2012 Milgard Manufacturing, Inc.	C650	SLIDING	FIBERGLASS	PAINT	CLEAR GLASS
LEVEL 4									
W01	14	5' - 0"	4' - 0"	® 2017 Milgard Manufacturing, Inc.	C650	SLIDING	FIBERGLASS	PAINT	CLEAR GLASS
W02	1	2' - 11 1/2"	3' - 5 1/2"	© 2012 Milgard Manufacturing, Inc.	C650	SLIDING	FIBERGLASS	PAINT	CLEAR GLASS
W03	4	2' - 11 1/2"	2' - 3 1/2"	© 2012 Milgard Manufacturing, Inc.	C650	SLIDING	FIBERGLASS	PAINT	CLEAR GLASS

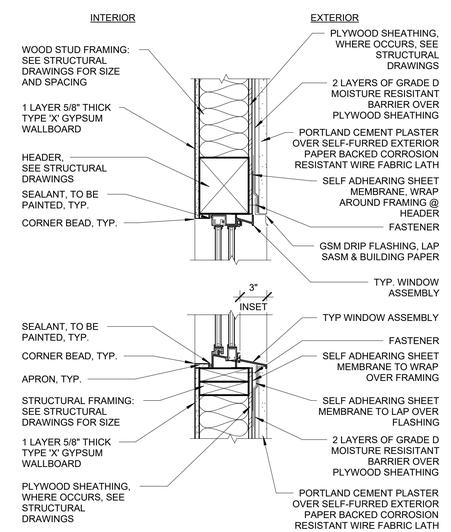

2 WINDOW DETAIL
1 1/2" = 1'-0"

www.ULTRA-UNIT.com
Architectural Studio
www.ULTRA-UNIT.com

Architect:
Ultra-Unit Architectural Studio
1327 Loma Avenue
Long Beach, California 90804
e. cameron@ultra-unit.com

Structural Engineer:
David Choi & Associates
1327 Loma Avenue
Long Beach, California 90804
e. david@dca-se.com

Owner:
Sarah Johnson
1377 N Garey Ave, LP
3982 S Figueroa St, Suite 209
Los Angeles CA, 90037
development@pathway2tomorrow.org

Architect Stamp

LICENSED ARCHITECT
CAMERON CROCKETT
C31503
1.31.2025
RENEWAL DATE
STATE OF CALIFORNIA

Date 10/7/2024

Project: **N GAREY AVE**
1377 N GAREY AVE
POMONA, CA

Client Name: SOUTHLAND DEVELOPMENT CO. INC.

Revisions

No.	Description	Date

Sheet Name
WINDOW SCHEDULE

Sheet Number
A802

Project Number	23-1025
Drawn By	GG
Checked By	CC
Scale	As indicated

7/16/2025 11:43:52 AM C:\Users\User\Desktop\1377 N Garey Ave _ R24_DL_cams.rvt

Lightology

BL5016 Halogen Bullyte with Mounting Stake

SPEC # HAD119280

BRAND Hadco by Signify

DESCRIPTION

BL5016 Aluminum Bullyte with Mounting Stake is fabricated from die cast marine grade aluminum alloy with fully adjustable swivel arm with vibration proof locking teeth and fully adjustable double gasketed shroud. Thermoset polyester powdercoat finish in Black, or Bronze. Clear tempered glass affixed at 10 degree angle for natural cleaning. Includes 1.4 inch diameter x 9.5 inch length S7 PVC stake with integral .5 inch NPS fitter. Optional junction box accessories available, sold separately. One 50 watt 12 volt GU5.3 MR16 lamp is required, but not included. Cowered MR16 recommended to protect inner capsule of lamp. Pre-wired with 3 foot pigtail of 18-2 AWG wire. Includes low voltage quick connector LVC3 for easy hook up to the low voltage supply cable, sold separately. 2.8 inch diameter x 5.8 inch length. ETL listed for wet locations. Required remote transformer and optional mounting accessories sold separately.

Shown in: Bronze

SHADE COLOR	N/A
BODY FINISH	Bronze
WATTAGE	50W
DIMMER	Dimmable
DIMENSIONS	5.8"L x 2.8"W
BULB NOT INCLUDED	
LAMP	1 x MR16/GU5.3 (bipin)/50W/12V Halogen 1 x MR16/GU5.3 (bipin)/12V LED
SPEC #	HAD119280

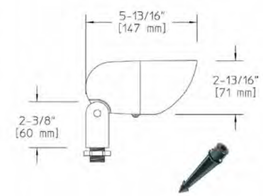

COMPANY | PROJECT | FIXTURE TYPE | APPROVED BY | DATE

LIGHTOLOGY.COM | BUSHQUOTES@LIGHTOLOGY.COM | Jan 18, 2024 | 1.866.954.4489

Lightology

Malta LED Ceiling Light Fixture

SPEC # KZC539445

BRAND Kuzco Lighting

DESCRIPTION

The Malta LED Flush Mount Ceiling Light will provide an even wash of light to surrounding areas. The circular glass diffuser is complemented by a variety of finishes to add a pop of color to your room. Available in two sizes.

Shown in: Brushed Nickel / White Opal

SHADE COLOR	White Opal
BODY FINISH	Brushed Nickel
WATTAGE	12W
DIMMER	Low Voltage Electronic
DIMENSIONS	12"W x 3.12"H
INTEGRATED LED MODULE	
LAMP	1 x LED/12W/120V LED
Technical Information	
LUMINOUS FLUX	570 lumens
LUMENS/WATT	47.50
LAMP COLOR	3000K
COLOR RENDERING	90 CRI
SPEC #	KZC539445

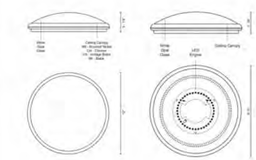

COMPANY | PROJECT | FIXTURE TYPE | APPROVED BY | DATE

LIGHTOLOGY.COM | BUSHQUOTES@LIGHTOLOGY.COM | Jan 18, 2024 | 1.866.954.4489

Lightology

Circa Wall / Ceiling Light

SPEC # MFR360263

BRAND Modern Forms

DESCRIPTION

This utilitarian Circa Wall / Ceiling Light is suitable for compact spaces like narrow hallways and stairwell landings as well as medium-sized rooms in office buildings and luxury homes. A thick, one-inch glass shade is pressed and sanded for pure whiteness, while a second insert is layered inside to extract the optimal amount of light from the high-performance LED modules.

Shown in: Titanium / Etched Opal

SHADE COLOR	Etched Opal
BODY FINISH	Titanium
WATTAGE	31W
DIMMER	Low Voltage Electronic
DIMENSIONS	11"W x 11"H x 2.5"D
INTEGRATED LED MODULE	
LAMP	1 x LED/31W/120V LED
Technical Information	
LUMINOUS FLUX	1080 lumens
LUMENS/WATT	34.84
LAMP COLOR	3000K
COLOR RENDERING	90 CRI
SPEC #	MFR360263

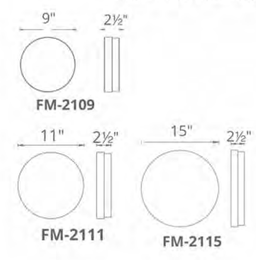

COMPANY | PROJECT | FIXTURE TYPE | APPROVED BY | DATE

LIGHTOLOGY.COM | BUSHQUOTES@LIGHTOLOGY.COM | Jan 18, 2024 | 1.866.954.4489

Lightology

Endurance 35W Outdoor Wallpack Luminaire

SPEC # WAC362548

BRAND WAC Lighting

DESCRIPTION

Endurance Outdoor Wall Flood Light features a die cast aluminum factory sealed housing with a heavy duty 0.50 inch threaded mounting arm. 360 degree horizontal rotation and 90 degree vertical aiming. Dimmable to 10 percent with electronic low voltage dimmer, sold separately. Photo and motion sensor available, sold separately.

Shown in: Architectural White

SHADE COLOR	N/A
BODY FINISH	Architectural White
WATTAGE	35W
DIMMER	Low Voltage Electronic
DIMENSIONS	6"W x 4.75"H x 4.9"D
INTEGRATED LED MODULE	
LAMP	1 x LED/35W/120V LED
Technical Information	
LUMINOUS FLUX	1945 lumens
LUMENS/WATT	55.57
LAMP COLOR	3000K
COLOR RENDERING	85 CRI
SPEC #	WAC362548

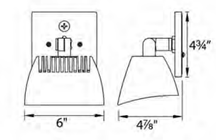

COMPANY | PROJECT | FIXTURE TYPE | APPROVED BY | DATE

LIGHTOLOGY.COM | BUSHQUOTES@LIGHTOLOGY.COM | Jan 18, 2024 | 1.866.954.4489

www.ULTRA-UNIT.com Architectural Studio

www.ULTRA-UNIT.com

Architect:
Ultra-Unit Architectural Studio
1327 Loma Avenue
Long Beach, California 90804
e. cameron@ultra-unit.com

Structural Engineer:
David Choi & Associates
1327 Loma Avenue
Long Beach, California 90804
e. david@dca-se.com

Owner:
Sarah Johnson
1377 N Garey Ave, LP
3982 S Figueroa St, Suite 209
Los Angeles CA, 90037
development@pathway2tomorrow.org

Architect Stamp

LICENSED ARCHITECT
CAMERON CROCKETT
C31503
1.31.2025
RENEWAL DATE
STATE OF CALIFORNIA

Date 10/7/2024

Project:
N GAREY AVE
1377 N GAREY AVE
POMONA, CA

Client Name: SOUTHLAND DEVELOPMENT CO. INC.

Revisions

No.	Description	Date

Sheet Name
LIGHTING SPECS

Sheet Number
A900

Project Number	23-1025
Drawn By	GG
Checked By	CC
Scale	

7/16/2025 11:43:54 AM C:\Users\User\Desktop\1377 N Garey Ave _ R24_DL_cams.rvt

VIEWRAIL

VIEWRAIL SIGNATURE POSTS

Signature Posts

Viewrail is America's leading producer of frameless glass systems. Our Surface Mount Talon Spigot is sustainably made from a single piece of aircraft-grade aluminum. By bypassing the need for welding, our aluminum Glass Surface Talon is the only of its kind in North America to be certified by the International Code Council.

Surface Talons have a sleek, minimal profile to help maximize the view, and they're designed for quick and easy install – just mount the talon to the surface, then tighten and adjust the glass using our proprietary hardware. With their innovative design and durable construction, Surface Mount Talon Spigots do the work for you.

We understand each project is unique, so our talons need to stand up to even the harshest environments.
That's why each Talon is anodized before being covered with our 2605 Platinum powder coat. That way each Talon receives two coastal-rated finishes.

When it comes to responsibly-made, thoroughly-tested frameless glass systems, there is no competition.

1

Mounting Styles

Core Drill

The Core drill post is designed to be plunged into concrete. The post is 6 1/4" long at the base.

Surface Mount

The Surface Mount post plate is the flagship post product. It sits on a 3.75" X 3.75" plate and is used for a majority of surface mount projects.

Special Application

The special application post foot plate was designed to be mounted on solid surfaces like concrete or stone. The footplate is 4.5" X 4.5".

Side Mount Post

The standard side mount post sits on a 6" X 5-1/2" plate. Depending on the post composition the plate ranges from .3125" to .375" thick. The aluminum is a bolt together style and the stainless is welded on.

Slim Side Mount

The slim side mount post was designed similar to the standard side mount post but with a minimal footprint. The aluminum is a bolt together that sticks.

Bump Out Side Mount

The bump out side mount post was designed to go around deeper fascias. The mounting plate is 2" deep and 6" tall.

Post Top Styles

Flat Top Post

Universal Top Post

3

Standard System Heights

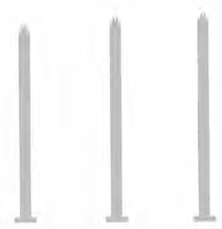

36" 39" 42"

Post Gauges

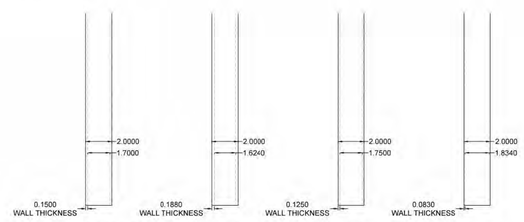

ALUMINUM 316SS 7 GAUGE 2205SS 11 GAUGE 304SS 14 GAUGE

4

Viewrail Signature Posts

Tech Specifications

Material: 6061 Aluminum (Aircraft Grade), 304 SS, 2205 SS

Finishes: Custom powder coated to order or brushed stainless

Height: Up to 42" Tall (System Height)

Standard Spacing: 4' on center

Mount Type: Core Drilled, Surface Mount, Special Application, Side Mount or Bump Out

Post Size: 2" X 2" Tube

Infill Options: Cable, 2205 Rods, or Glass

Compliance: *ICC, IBC International Building Code® (2015,2018,2021), IRC International Residential Code® (2015, 2018, 2021)*

2

www.ULTRA-UNIT.com Architectural Studio

www.ULTRA-UNIT.com

Architect:
Ultra-Unit Architectural Studio
1327 Loma Avenue
Long Beach, California 90804
e. cameron@ultra-unit.com

Structural Engineer:
David Choi & Associates
1327 Loma Avenue
Long Beach, California 90804
e. david@dca-se.com

Owner:
Sarah Johnson
1377 N Garey Ave, LP
3982 S Figueroa St, Suite 209
Los Angeles CA, 90037
development@pathway2tomorrow.org

Architect Stamp

LICENSED ARCHITECT
CAMERON CROCKETT
C31503
1.31.2025
RENEWAL DATE
STATE OF CALIFORNIA

Date 10/7/2024

Project:
N GAREY AVE
1377 N GAREY AVE
POMONA, CA

Client Name: SOUTHLAND DEVELOPMENT CO. INC.

Revisions

No.	Description	Date

Sheet Name
RAILING

Sheet Number
A901

Project Number	23-1025
Drawn By	GG
Checked By	CC
Scale	

7/16/2025 11:43:55 AM C:\Users\User\Desktop\1377 N Garey Ave_ R24_DL_cams.rvt