WISCONSIN RESIDENCE

1207 WISCONSIN ST. POMONA, CA. 91768

CONTRACTOR TO VERIFY ALL DIMENSIONS WITH ARCHITECT PRIOR TO COMMENCING WORK, ARCHITECT WILL NOT BE LIABLE FOR ANY MISTAKES DONE ON SITE WITHOUT VERIFYING WITH ARCHITECT. DRAWINGS SHOULD NOT BE SCALED AS THEY MAY DIFFER DUE TO REPROGRAPHICAL ERRORS.

1. CONTRACTOR SHALL VERIFY ALL DIMENSIONS AND CONDITIONS PRIOR TO ANY WORK AND SHALL NOTIFY THE ARCHITECT OF ANY DISCREPANCY. CONTRACTOR SHALL BE RESPONSIBLE FOR ALL REPAIRS REQUIRED DUE TO HIS FAILURE TO DO SO.
2. CONTRACTOR SHALL BE RESPONSIBLE FOR OBTAINING, COORDINATING, AND SCHEDULING OF ALL INSPECTIONS AND TESTS INDICATED ON THE PLANS AND SPECIFICATIONS RECOMMENDED BY THE SOILS REPORT AND/OR REQUIRED BY ANY GOVERNMENTAL AGENCY.
3. CONTRACTOR SHALL VERIFY THE SIZE AND LOCATION OF ALL UTILITY LINES AND STUBS TO THE BUILDING (S) AS MAY BE INDICATED ON THE PLANS.
4. CONTRACTOR SHALL BE REQUIRED TO BRING ALL UTILITY LINES (WATER, SEWER (S), GAS, AND ELECTRICAL), TO WITHIN 5'-0" OF THE BUILDING TO TERMINATION POINTS AS INDICATED ON THE PLANS READY FOR CONNECTION.
6. BUILDING PADS CONSTRUCTED PER SOILS ENGINEERS SPECIFICATIONS ARE ASSUMED TO BE AT + 0.10 FT. OF THE ELEVATIONS SHOWN ON THE PLANS. CONTRACTOR SHALL NOTIFY ARCHITECT/ENGINEER OF ANY DISCREPANCIES UPON VERIFICATION.
7. PAVING SHALL BE ACCOMPLISHED ACCORDING TO THE SITE PAVING SPECIFICATIONS AND THE SOILS REPORT AND SHALL BE OF THE SAME SECTION AND DRAINAGE SCHEME AS ADJACENT PAVED AREAS. THE BUILDING CONTRACTOR SHALL BE RESPONSIBLE FOR THE A.C OR CONCRETE PAVING, ON AND OFF SITE. IF THE EXISTING PAVING FALLS SHORT OF THE BUILDING LINE, OR IF A PORTION OR SECTION OF THE EXISTING PAVING NEEDS TO BE REMOVED FOR CONSTRUCTION PURPOSE, THE BUILDING CONTRACTOR SHALL, AT THE APPROPRIATE TIME, REPLACE THE A.C. PAVING TO THE BUILDING LINE. THICKNESS OF THE A.C. PAVING BASE MATERIAL AND ALL OTHER ASPECTS SHALL MATCH EXISTING OTHER ASSOCIATED PERMANENT IMPROVEMENTS SUCH AS CONCRETE CURBS, WHEELSTOPS, PLANTING AND IRRIGATION OF DISTURBED OR DAMAGE DURING THE CONSTRUCTION PROCESS SHALL LIKEWISE BE REPLACED AND RESTORED INCLUDING PAVEMENT STRIPING. PER APWA STANDARD PLANS AND CITY STANDARDS.
8. THE CONTRACTOR WILL PROVIDE THE OWNER WITH A LETTER OF CERTIFICATION PREPARED IMMEDIATELY AFTER FOOTINGS ARE PLACED, TO CONFIRM THAT THE LOCATION OF FOOTINGS COMPLY WITH THE APPROVED SITE DRAWINGS. THIS SHALL BE DONE BY THE SITE CIVIL ENGINEER AT THE CONTRACTORS EXPENSE. ANY DISCREPANCIES FROM THE APPROVED BUILDING LOCATION WILL BE REMOVED AT THE CONTRACTORS EXPENSE.
9. GENERAL CONTRACTOR SHALL NOTIFY THE ARCHITECT & THE OWNER OF THE ANTICIPATED POURING OF THE SLAB ONE WEEK IN ADVANCE.
10. ALL REVISIONS TO THE DRAWINGS MUST PROCEED THROUGH NORMAL CHANNELS.
11. THE ENERGY CONSERVATION STANDARDS HAVE BEEN REVIEWED AND THE DESIGN OF THE BUILDING(S) COMPLIES WITH THE STANDARDS.
12. AT THE TIME OF THE FINAL BUILDING DEPARTMENT INSPECTION, THE CONTRACTOR SHALL GIVE THE BUILDING OFFICIAL A CERTIFICATE OF INSULATION COMPLIANCE WITH THE ENERGY CONSERVATION STANDARDS.
13. ALL WOOD TRIM SHALL BE BACK- PRIMED WITH A MINIMUM ONE (1) COAT PAINT PRIOR TO INSTALLATION.
14. NO ADDITIONAL ROOF OPENINGS OR ROOF MOUNTED EQUIPMENT ARE ALLOWED BEYOND THAT WHICH IS SHOWN ON THESE PLANS WITHOUT WRITTEN CONSENT OF THE ARCHITECT AND HIS STRUCTURAL ENGINEER.
15. CONTRACTOR SHALL PROVIDE PUBLIC PROTECTION AS NECESSARY PER CITY AND LOCAL CODE REQUIREMENTS, SECTION 3306, CBC.
16. ALL MATERIALS AND WORK SHALL CONFORM TO LATEST GOVERNING BUILDING CODES AND REGULATIONS.
17. COVER ALL CONCRETE SLAB SURFACES WITH CURING PAPER BEFORE STARTING ADJACENT CONCRETE SLABS. CONCRETE CONTRACTOR SHALL BE RESPONSIBLE FOR SPLASHING OF FRESH CONCRETE SEE SPECIFICATIONS.
18. ALL WALL FRAMING SHALL BE 2 X 4 WOOD STUDS AT 16" O.C. UNLESS OTHERWISE NOTED. 2X6 WOOD STUDS SHALL BE USED FOR WALLS RECEIVING HEAVY PLUMBING, ELECTRICAL PANELS, OR CONCEALING PIPE COLUMNS. ALL STUDS OVER 14'-0" HEIGHT SHALL BE 2 X 6. SEE STRUCTURAL.
19. ALL REVISIONS TO THE DRAWINGS MUST PROCEED THROUGH NORMAL CHANNELS.
20. THE POWER SOURCE FOR SMOKE DETECTORS SHALL BE AS FOLLOWS:
a. IN NEW CONSTRUCTION SMOKE DETECTORS SHALL RECEIVE THEIR PRIMARY POWER FORM THE BUILDING WIRING AND SHALL BE EQUIPPED WITH A BATTERY BACKUP.
b. IN EXISTING SFD, SMOKE DETECTORS MAY BE BATTERY OPERATED.
c. CARBON MONOXIDE ALARM IS REQUIRED PER SEC 420.4 & R315

GENERAL NOTES

BUILT: 1924

LEGAL INFORMATION: APN NO.: 8340002023
ZONING: SINGLE FAMILY
LOT SIZE: 5,761 SQ.FT.
PARCEL NUMBER: 23

BUILDING DATA

AREA CALCULATIONS:

LOT AREA: 5,761 SQ.FT.

EXISTING:
(E) HOUSE SQUARE FOOTAGE: 955 SQ.FT.
(E) GARAGE: TO BE DEMOLISHED (200 SQ.FT EXEMPT)

ADDITION:
(N) HOUSE ADDITION 510 SQ.FT.
(N) GARAGE 504 SQ.FT.

OVERALL:
(E) SQUARE FOOTAGE: 1,155 SQ.FT.
(N) HOUSE & GARAGE: 1,014 SQ.FT.

TOTAL BUILDING COVERAGE = 2,169 SQ. FT.

BUILDING COVERAGE PERCENTAGE–
(TOTAL BUILDING COVERAGE) / (LOT AREA) X (100%)= 37.64%

APPLICABLE CODES

TYP.	TYPICAL
CONC.	CONCRETE
O.C.	ON CENTER
C.J.	CEILING JOIST
R.R.	ROOF RAFTER
HDR.	HEADER
MIN.	MINIMUM
MAX.	MAXIMUM
HT	HEIGHT
HW	HALLOW WOOD
WD	WOOD
WP	WATERPROOF
S	SINGLE
D	DOUBLE
E	EXISTING
THK	THICKNESS
FIN	FINISH

ABBREVIATION

1. (R) WALL TO BE REMOVED
2. (E) WALL TO REMAIN
3. (N) WALL
4. ROOM NAME — ROOM NAME
5. (R) — (R) EXISTING DOOR TO BE REMOVED
6. (E) — (E) EXISTING DOOR TO REMAIN
7. (E) — EXISTING WINDOW TO REMAIN
8. (101) — (N) DOOR AS PER SCHEDULE
9. (101) — (N) WINDOW AS PER SCHEDULE
10. (7 / A9) — SECTION/ ELEVATION NUMBER SHEET NUMBER
11. (5 / A-1) — DETAIL NUMBER SHEET NUMBER
12. DETAIL BUBBLE
13. PROPERTY LINE
14. SETBACKS
15. ROOF PITCH DIRECTION
16. ELEVATION MARKER
17. (CM) — CARBON MONOXIDE
18. (S) — SMOKE DETECTOR
19. $ — LIGHT SWITCH
20. ELECTRICAL OUTLET
21. PHONE JACK
22. ETHERNET CABLE
23. RECESSED LIGHTING
24. WALL MOUNTED LIGHTING
25. EXHAUST FAN-LIGHT COMBO 50 CFM MIN. - VENT TO OUTSIDE AIR

SYMBOL DEFINITIONS

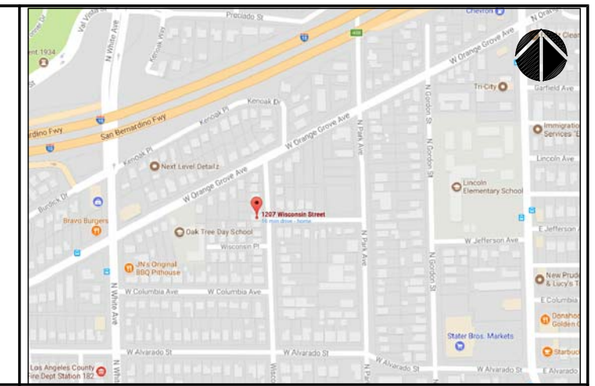

VICINITY MAP

- INTERIOR REMODEL
- ADDITION/ EXTENSION TO WEST SIDE OF THE HOME
- NEW GARAGE

SCOPE OF WORK

CONSULTANT DIRECTORY

SHEET	DESCRIPTION
A0	TITLE SHEET
A1	GENERAL NOTES
A1.1	EXISTING SITE PLAN
A1.2	EXISTING FLOOR PLAN
A1.3	DEMOLITION PLAN
A1.4	EXISTING ELEVATIONS
A2	NEW SITE PLAN
A3	NEW FLOOR PLAN
A4	UTILITY PLAN
A5	FOUNDATION PLAN
A6	ROOF PLAN
A7	ELEVATIONS
A8	SECTIONS
A9	SECTIONS
A10	DETAILS
A11	SCHEDULE

SHEET INDEX

D.WorkShop - 74

3766 FOSTER AVE.
BALDWIN PARK, CA. 91706
tel. 626.712.1718

RESIDENTIAL ADDITION

THIS DRAWING IS AN INSTRUMENT OF SERVICE, IS THE PROPERTY OF THE DESIGNER AND MAY NOT BE REPRODUCED WITHOUT THE DESIGNERS PERMISSION AND UNLESS THE REPRODUCTION CARRIES THE DESIGNERS NAME. ALL DESIGN AND OTHER INFORMATION SHOWN ON THE DRAWING ARE FOR USE ON THE SPECIFIED PROJECT ONLY AND SHALL NOT BE USED OTHERWISE WITHOUT WRITTEN PERMISSION FROM THE DESIGNER.

WISCONSIN RESIDENCE

1207 WISCONSIN ST.
POMONA, CA. 91768

Consultants

Approvals:

Key Plan:

NOTES:
MECHANICAL, ELECTRICAL, AND PLUMBING PERMITS TO BE PULLED SEPARATELY.

Submittals	Date
submittal 1	08.07.2017

No.	Revision	Date
1		02.05.2018

Sheet Title

A0

Job No.	Date	Scale
0006	02.20.2018	TBD

TITLE SHEET

PATH: G:\Users\Vision\Dropbox\Library\Projects\0006_Wisconsin\CAD\0006_Wisconsin.dwg DATE: 02/20/18 9:19pm LOGIN: Vision
WS1 Stamp:Jack Bailey/Joyce/Job_Area/GRITS_Bus_Ctr.jpg

GENERAL NOTES

ALL WORK SHALL MEET (W/ LATEST REVISION AND LOCAL AMENDMENTS):

2013 CALIFORNIA RESIDENTIAL CODE

2013 CALIFORNIA PLUMBING CODE

2013 CALIFORNIA ELECTRICAL CODE

2013 CALIFORNIA MECHANICAL CODE

2013 ENERGY CODE

DRAWING NOTES: DO NOT SCALE DRAWINGS. USE GIVEN DIMENSIONS. CHECK DETAILS FOR APPROPRIATE LOCATION OF ALL ITEMS NOT DIMENSIONED ON THE DRAWINGS. DIMENSIONS ON THE DRAWINGS ARE TO FRAMING ELEMENTS OR ON THE CENTERLINE OF COLUMNS UNLESS NOTED OTHERWISE. DOORS AND CASED OPENINGS WITHOUT DIMENSIONS ARE TO BE 4" FROM THE FACE OF THE ADJACENT WALL OR CENTERED BETWEEN THE WALLS, UNLESS NOTED OTHERWISE. VERIFY FIELD CONDITIONS PRIOR TD COMMENCEMENT OF EACH PORTION OF THE WORK. "ALIGN" MEANS TO ACCURATELY LOCATE FINISHED FACES IN THE SAME PLANE.

DISCREPENCIES: IN CASE OF DISCREPENCIES BETWEEN THESE GENERAL NOTES, THE CONTRACT DRAWINGS AND SPECIFICATION, AND/ OR REFERENCE STANDARDS, THE ENGINEER SHALL DETERMINE WHICH SHALL GOVERS. DISCREPANCIES SHALL BE BROUGH TO THE ATTENTION OF THE ENGINEER BEFORE PROCEEDING WITH THE WORK.

BEST MANAGEMENT PRACTICES FOR CONSTRUCTION ACTIVITES: THE FOLLOWING IS INTENDED AS AN ATTACHEMENT FOR CONSTRUCTION AND GRADING PLANS AND REPRESENT THE MINIMUM STANDARDS OF GOOD HOUSEKEEPING WHICH MUST BE IMPLEMENTED ON ALL CONSTRUCTION SITES REGARDLESS OF SIZE OR LOCATION.

1. ERODED SEDIMENTS AND OTHER POLLUTANTS MUST BE RETAINED ON SITE AND MAY NOT BE TRANSPORTED FROM THE SITE VIE SHEETFLOW, SWALES, AREA DRAINGS, ANTURAL DRAINAGE COURSES OR WIND.

2. STOCKPILES OF EARTH AND OTHER CONSTRUCTION RELATED MATERIALS MUST BE PROTECTED FROM BEING TRASNPORTED FROM THE SITE BY THE FORCES OF WIND OR WATER.

3. FUELS, OILS, SOLVENTS AND OTHER TOXIC MATERIALS MUST BE SOTRED IN ACCORDANCE WITH THEIR LISTING AND ARE NOT TO CONTAMINATE THE SOIL AND SURFACE WATERS. ALL APPROVED SOTRAGE CONTAINERS ARE TO BE PROTECTED FROMT HE WEATHER. SPILLS MUST BE CLEANED UP IMMEDIATELY AND DISPOSED OF IN A PROPER MANNER. SPILLS MAY NOT BE WASHED INTO THE DRAINAGE SYSTEM.

4. EXCESS OR WASTE CONCRETE MAY NOT BE WASHED INTO THE PUBLIC WAY OR ANY OTHER DRAINAGE SYSTEM. PROVISIONS SHALL BE MADE TO RETAIN CONCRETE WASTES ON SITE UNTIL THEY CAN BE DISPOSED OF AS SOLID WASTE.

5. TRASH AND CONSTRUCTION RELATED SOLID WASTES MUST BE DEPOSITED INTO A COVERED RECEPTABLE TO PREVENT CONTAMINATION OF A RAINWATER OR DSIPERSAL BY WIND.

6. SEDIMENTS AND OTHER MATERIALS MAY NOT BE TRACKED FROM THE SITE BY VEHICLE TRAFFIC. THE CONSTRUCTION ENTRANCE ROADWAYS MUST BE STABILIZED SO AS TO INHIBIT SEDIMENTS FROM BEING DEPOSITED INTO THE PUBLIC WAT. ACCIDENTAL DEPOSITIONS MUST BE SWEPT UP IMMEDIATELY AND MAY NOT BE WASHED DOWN BY RAIN OR OTHER MEANS.

7. ANY SLOPES WITH DISTURBED SOILS OR DENUDED OF VEGETATION MUST BE STABALIZED AS TO INHIBIT EROSION BY WIND/ WATER.

INSPECTION REQUIREMENTS: SPECIAL INSPECTIONS ARE REQUIRED BY THE LOCAL BUILDING CODE. THE CONTRACTOR SHALL NOTIFY BUILDING DEPARTMENT FOR INSPECTION REQUIRED BY LOCAL JURISDICTION.

SITE VERIFICATION: THE CONTRACTOR SHALL VARIFY ALL DIMENSIONS AND CONDITIONS AT THE SITE PRIOR TO FABRICATION AND/ OR CONSTRUCTION. CONFLICTS BETWEEN THE DRAWINGS AND ACTUAL SITE CONDITIONS SHALL BE BROUGHT TO THE ATTENTION OF THE ENGINNER AND ARCHITECT BEFORE PROCEEDING WITH THE WORK. ALL UNDERGROUND UTILITIES SHALL BE DETERMINED BY THE CONTRACTOR PRIOR TO EXCAVATION OR DRILLING.

STRUCTURAL RESPONSIBILITIES: THE SER IS RESPONSIBLE FOR THE STRENGHT AND STABILITY OF THE PRIMARY STRUCTURE IN ITS COMPLETED STATE.

CONTRACTOR RESPONSIBILITIES: THE CONTRACTOR IS RESPONSIBLE FOR THE MEANS AND METHODS OF CONSTRUCTION AND ALL JOB RELATED SAFETY STANDARDS SUCH AS OSHA AND WSHA. THE CONTRACTOR IS RESPONSIBLE FOR THE STRENGHT AND STABILITY OF THE STRUCTURE DURING CONSTRUCTION AND SHALL PROVIDE TEMPORARY SHORING, BRACING AND OTHER ELEMENTS REQUIRED TO MAINTAIN STABILITY UNTIL THE STRUCTURE IS COMPLETED. IT IS THE CONTRATORS RESPONSIBILITY TO BE FAMILIAR WITH THE WORK REQUIRED IN THE CONSTRUCTION DOCUMENTS AND THE REQUIREMENTS FOR EXECUTING IT PROPERLY. CONTRACTOR SHALL VERIFY ALL EXISTING CONDITIONS PRIOR TO COMMENCING WORK AND DETERMINE THE LOCATION OF ALL ADJACENT UNDERGROUND UTILITIES PRIOR TO COMMENCING EXCAVATION AND NOTIFY ARCHITECT OF DISCREPENCIES AND CONFLICT. THE CONTRACTOR MUST RETAIN A LICENSED STRUCTURAL ENGINEER WHO SHALL INVESTIGATE WHERE THIS TEMPORARY SHORING/ BRACING IS REQUIRED, AND SHALL DESIGN THIS TEMPORARY SHORING/ BRACING. CONTRACTOR VERIFY ALL DIMENSIONS AND STRUCTURAL MEMBER SIZES PRIOR TO THE CONSTRUCTION. CONTRACTOR TO INFORM ARCHITECT OF ANY DISCREPANCIES IN THE DOCUMENTS OR IN CONFLICT WITH THE CODES. CONTRACTOR INITIATED CHANGES SHALL BE SUBMITTED IN WRITING TO THE OWNER AND ARCHITECT AND STRUCTURAL ENGINEER FOR APPROVAL PRIOR TO FABRICATION OR CONSTRUCTION. PROVIDE ADEQUATE TIME (3-5 WORKING DAYS MINIMUM) FOR OWNER AND ENGINEER TO REVIEW PROPOSED CHANGE. CONTRACTOR SHALL BE RESPONSIBLE FOR ALL REQUIRED SAFETY PRECAUTIONS AND METHODS, TECHNIQUES, SEQUENCES OR PROCEDURES REQUIRED TO PERFORM THE WORK. ALL STRUCTURAL SYSTEMS SUCH AS WOOD PRESSED-PLATE TRUSSES WHICH HAVE COMPONENTS TO BE FIELD ERECTED SHALL BE SUPERVISED BY THE SUPPLIER DURING MANUFACTURING, DELIVERY, HANDLING, STORAGE AND ERECTION IN ACCORDANCE WITH THE SUPPLIER'S PRINTED INSTRUCTIONS. CONTRACTOR TO COORDINATE STRUCTURAL FRAMING WITH ELECTRICAL, PLUMBING AND MECHANICAL WORK. CONTRACTOR IS RESPONSIBLE FOR THE PROPER OPERATION OF ALL SYSTEMS AND THE COORDINATION OF ALL SYSTEMS AND TRADES. CONTRACTOR TO NOTIFY ENGINEER FOR RESOLUTION OF ALL DISCREPANCIES PRIOR TO CONSTRUCTION.

DEMOLITION: CONTRACTOR SHALL VERIFY ALL EXISITNG CONDITIONS BEFORE COMMENCING ANY DEMOLITION. SHORING SHALL BE INSTALLED TO SUPPORT EXISITING CONSTRUCTION AS REQUIRED AND IN A MANNER SUITABLE TOT HE WORK SEQUENCES. EXISTING REINFORCING HSALL BE SAVED WHERE AND AS NOTED ON THE PLANS. SAW CUTTING, IF AND WHERE USED, SHALL NOT CUT EXISTING STRUCTURE. LIMIT CONSTRUCTION LOADING (INCLUDING DEMOLITION DEBRIS) ON EXISTING FLOOR SYSTEMS TO 40 PSF.

1. ALL NEW OPENING THROUGH EXISTING WALLS, SLABS AND BEAMS SHALL BE ACCOMPLISHED BY SAW CUTTING WHEREVER POSSIBLE.

2. CONTRACTOR VERIFY EXISITNG CONDITIONS AND LOCATION OF MEMBERS PRIOR TO CUTTING ANY OPENING.

3. SMALL ROUND OPENING SHALL BE ACCOMPLISHED BY CORE DRILLING, IF POSSIBLE

FIRE DEPARTMENT REQUIREMENTS: ALL ACCESS SHALL COMPLY WITH CURRENT AND LATEST CODE/AMENDMENTS. FIRE DEPARTMENT ACCESS SHALL BE EXTENDED TO WITHIN 150 FEE DISTANCE OF ANY EXTERIOR PORTION OF ALL STRUCTURES. THE PRIVATE DRIVEWAYS SHALL BE INDICATED ON THE FINAL MAP AS "PRIVATE DRIVEWAY AND FIRE LANE" WITH THE WIDTHS CLEARLY DEPICTED AND SHALL BE MAINTAINED IN ACCORDANCE WITH THE FIRE CODE. VEHICULAR ACCESS MUST BE PROVIDED AND MAINTAINED SERVICEABLE THROUGHOUT CONSTRUCTION TO ALL REQUIRED FIRE HYDRANTS: ALL REQUIRED FIRE HYDRANTS SHALL BE INSTALLED, TESTED AND ACCEPTED PRIOR TO OCCUPANCY.

SECURITY REQUIREMENTS: THE FOLLOWING ARE INTENDED TO REPRESENT MINIMUM STANDARDS OF GOOD HOME SECURITY.

1. A DOOR, WINDOW, SKYLIGHT OR OTHER OPENING FORMING PART OF THE ENCLOSURE OF A DWELLIGN UNTI OR OF A PRIVATE GARAGE WITH AN IINTERIOR OPENING DIRECTLY INTO A DWELLING UNIT OR OF AN AREA OCCUPIED BY ONE TENANT OF A BUILDING SHALL BE SECURED AS SET FORTH IN CHAPTER 67.

2. EXIT DOORS SHALL BE OPENABLE FROM THE INSIDE WITHOUT THE USE OF A KEY OR ANY SPECIAL KNOWLEDGE OR EFFORT

3. EXIT DOORS FROM BUILDING OR ROOMS; INDIVIDUAL DWELLING UNTIS; GROUP R, DIVISIONS 3 CONGREGATE RESIDENCES; AND GUEST ROOMS OF GROUP R OCCUPANCIES HAVING AN OCCUPANT LOAD OF 10 OR LESS MAY BE PROVIDED WITH A NIGHT LATCH, DEAD BOLT OR SECURITY CHAIN, PROVIDED SUCH DEVICES ARE OPENABLE FROM TE INSIDE WITHOUT THE USE OF A KEY OR TOOL, SPECIAL KNOWLEDGE OR EFFORT AND ARE MOUNTED AT A HEIGHT NOT TO EXCEED 48 INCHES ABOVE THE FINISHED FLOOR.

4. THE DEADBOLT LOCK OR LOCKS SHALL BE KEY-OPERATED FROM THE EXTERIOR SIDE OF THE DOOR AND ENGAGED OR DISENGAGED FROM THE INTERIOR SIDE OF THE DOOR BY A DEVICE NOT REQUIREING A KEY, TOOL OR EXCESSIVE FORCE.

5. IN RESIDENTIAL OCCUPANICES, DOORS MAY BE EQUIPPED WITH SECURITY TYPE HARDWARE WHICH REQUIRES A KEY TO RELEASE FROM THE INTERIOR SIDE OF THE DOOR IF THE SLEEPING ROOMS ARE PROTECTED WITH A FIRE WARNING SYSTEM.

CRAWL SPACE: CRAWL SPACES SHALL BE VENTILATED WITH AN APPROVED MECHANICAL MEANS OR BY OPENINGS IN THE EXTERIOR FOUNDATION WALLS. OPENINGS SHALL HAVE A NET AREA OF NOT LESS THAN 1 SQUARE FOOT FOR EACH 150 SF OF UNDER-FLOOR AREA. ONE OPENING SHALL BE WITHIN 3 FEET OF EACH CORNER IF POSSIBLE. THE OPENING SIZE SHALL BE EQUALLY DISTRIBUTED ALONG THE LENGTH OF TWO OPPOSITE SIDES PER IRC R401 3.

GARAGES: DOORS BETWEEN DWELLING AND GARAGE SHALL BE SOLID CORE WOOD 1 -3/8" MINIMUM THICKNESS OR 20-MINUTE FIRE RATED PER IRC R309.1. THERE SHALL BE NO OPENINGS BETWEEN ROOMS USED FOR SLEEPING PURPOSES AND THE GARAGE. SEPARATE THE RESIDENTIAL SPACES INCLUDING ATTIC PACES FROM THE GARAGE OR SHOP WITH NOT LESS THAN 1/2" GWB APPLIED AT THE GARAGE SIDE. AND, GARAGES BELOW HABITABLE SPACES SHALL BE SEPARATED WITH 5/8" TYPE "X" GWB PER IRC R309.2. HEATING/COOLING EQUIPMENT LOCATED IN GARAGE SHALL BE INSTALLED WITH PILOTS AND BURNERS AND HEATING ELEMENTS AND SWITCHES AT LEAST 18" ABOVE THE FLOOR LEVEL PER IRC G2408.2. PROVIDE AUTOMATIC GARAGE OPENERS SHALL BE LISTED IN ACCORDANCE WITH UL 325.

FIREPLACES: FACTORY BUILT FIREPLACES AND CHIMNEYS SHALL BE LISTED AND INSTALLED PER THE MANUFACTURERS SPECIFICATIONS, IRC R1004.1 AND TESTED IN ACCORDANCE WITH UL 127. MASONRY FIREPLACES, BARBECUES, SMOKE CHAMBERS, AND CHIMNEYS SHALL BE CONSTRUCTED OF MASONRY OR REINFORCED CONCRETE. FOUNDATIONS SHALL BE MINIMUM 12" THICK AND EXTEND 6 " BEYOND FACE OF MASONRY. WALLS MINIMUM 8" THICK EXCEPT IN FIR EBOX TO BE MINIMUM 1 O " THICK. COMBUSTIBLE MATERIALS SHALL NOT BE INSTALLED WITHIN 2 INCHES OF FIR EPLACE, SMOKE CHAMBER OR CHIMNEY WALLS. COMBUSTIBLE MATERIALS SHALL NOT BE PLACED WITHIN 6" OF THE FIREPLACE OPENING. HEARTH TO BE MINIMUM 4" THICK NON-COMBUSTIBLE MATERIAL EXTENDING 16" IN FRONT AND 8" TO THE SIDE OF THE FIREPLACE OPENING. COMBUSTIBLE MATERIAL WITHIN 12" OF THE FIREPLACE OPENING SHALL NOT PROJECT MORE THAN 1/8" FOR EACH 1 " DISTANCE FROM SUCH OPENING. R EFER TO IRC R305.

CEILING HEIGHTS: HABITABLE SPACES SHALL HAVE A CLEAR CEILING HEIGHT OF NOT LESS THAN 7'-0". NOT MORE THAN 50% OF REQUIRED FLOOR AREA OF A SPACE IS PER MITTED TO HAVE A SLOPED CEILING LESS THAN 7'-0" WITH NO PORTION LESS THAN 5'-0". BATHROOMS SHALL HAVE A MINIMUM CEILING HEIGHT WITH NO PORTION BEING LOWER THAN 6'-8" ABOVE THE FIXTURES AND ITS FRONT CLEARANCE AREA. IRC R305.

ROOFING: APPLY ROOFING IN CONFOR MANCE WITH IRC R905. BALCONIES, LANDINGS, EXTERIOR STAIRWAYS, OCCUPIED ROOFS AND SIMILAR SURFACES EXPOSED TO THE WEATHER SHALL BE WATERPROOFED AND SLOPED A MINIMUM OF 1/ 4" PER FOOT (2%) FOR DRAINAGE.

ATTIC: PROVIDE ATTIC VENTILATION AS INDICATED ON THE DRAWINGS. THE NET FREE VENTING AREA SHALL BE NOT LESS THAN 1/150TH OF THE AREA OF THE SPACE. EXCEPT THAT THE AREA MAY BE 1/300TH PROVIDED ATLEAST 503 OF THE REQUIRED VENTILATING AR EA IS PROVIDED WITH VENTILATORS LOCATED IN THE UPPER PORTION OF THE SPACE TO BE VENTILATED AT LEAST 3 FEET ABOVE THE EAVES OR CORNICE VENTS WITH THE BALANCE OF THE REQUIR ED VENTILATION PROVIDED BY EAVE OR COR NICE VENTS (IRC R806.2). ATTIC ACCESS SHALL BE A MINIMUM 22" X 30" OPENING WITH A MINIMUM 30" CLEARANCE HEADROOM ABOVE, UNOBSTR UCTED, ANO READILY ACCESSIBLE FROM BELOW. PROVIDE FOR ALL ATTIC SPACES OVER 30 SF AND OVER 30" HIGH (IRC R806.2).

GLAZING: GLAZING IN HAZARDOUS LOCATIONS SUCH AS GLASS IN DOORS, GLASS WITHIN 24" EACH SIDE OF A DOOR OPENING, AREAS WITHIN 60" VERTICALLY AND 60" HORIZONTAL FROM THE BOTTOM LANDING OF A STAIR WAY, STORM DOORS, RAILINGS, SHOWER DOORS, SLIDING GLASS DOORS, AND THE ENCLOSURES AROUND TUB/SHOWER ENCLOSURES SHALL BE SAFITT GLAZING MATERIALS .

EGRESS: EACH SLEEPING ROOM SHALL BE PROVIDED WITH AN ESCAPE OPENING: NET CLEAR OPENING OF 5.7 SF. THE NET CLEAR OPENING HEIGHT SHALL BE 24" AND THE NET CLEAR OPENING WIDTH SHALL BE 20". THE SILL HEIGHT SHALL BE NO HIGHER THAN 44" ABOVE THE FINISHED FLOOR. R EFER TO IRC R310. 1 . A MINIMUM OF ONE BUILDING EXIT DOOR IS REQUIR ED. THE MINIMUM SIZE IS 3'-0" WIDE X 6"-8" HIGH. PROVIDE DIRECT ACCESS TO THE EXTERIOR.

STAIRWAYS: MINIMUM HEADROOM IS 6'-8" MEASUR ED VERTICALLY FROM A SLOPED PLANE CONNECTING THE TREAD NOSING OR FROM THE FLOOR SURFACE OR PLATFORM. MINIMUM WIDTH IS 36 ". REFER TO IRC R311 .5.1 . MINIMUM TR EAD: 10". MAXIMUM RISER IS 7-3/4". HANDRAIL: 34" TO 38" ABOVE STAIR NOSING. HANDRAIL TO BE 1-1/4" TO 2" CROSS SECTION AND 1 -1/2" AWAY FROM WALL. IRC R311.5.6. INSTALL FIRE BLOCKING AT MID STRINGER SPAN AND AT WALL ALONG STRINGER. COVER WALLS AND SOFFITS OF USABLE SPACE UNDER STAIR

WITH 1/2". IRC R31 1 .2.2. GUARDRAILS: ANY EXTERIOR WALKING SURFACE 30" OR MORE ABOVE GRADE OR ADJACENT SUR FACE SHALL HAVE MINIMUM 36" HIGH GUAR DRAIL. IRC R312. AT STAIRS MOR E THAN 30 INCHES ABOVE FLOOR OR GRADE PROVIDE A 34" MINIMUM HEIGHT GUARDRAIL. PROVIDE INTERMEDIATE RAILS THAT TO NOT ALLOW PASSAGE OF A 4" DIAMETER SPHERE.

FIRE PROTECTION SYSTEMS: EACH BEDROOM, AND OUTSIDE SLEEPING ROOM, AND ON EACH STORY TO BE PROVIDED WITH A SMOKE DETECTOR. SMOKE DETECTOR POWER SOURCES TO BE INSTALLED IN ACCORDANCE WITH NFPA 72 AND IRC R313. ALL ALAR M DEVICES TO BE INTERCONNECTED PER IRC R313.2. FRAMING TD HAVE FIREBLOCKING PER IRC R 602.8. PROVIDE DRAFTSTOPPING AT CONCEALED SPACES OVER 1000 SF PER IRCR502.1 2.

VENTILATION SYSTEMS: IN HABITABLE ROOMS NOT PROVIDED WITH AN OPENABLE EXTERIOR OPENING OF AT LEAST 4% OF THE FLOOR AREA. A MECHANICAL VENTILATION SYSTEM MUST BE PROVIDED THAT PROVIDES A MINIMUM 0.35 AIR CHANGES PER HOUR PER IRC R303.1 . DRYER AND BATHROOM FANS SHALL BE 50 CFM, AND RANGE FANS SHALL BE 100 CFM MINIMUM WITH VENTING TO THE EXTERIOR.

NATURAL LIGHTING: ALL HABITABLE ROOMS SHALL HAVE AN AGGREGATE GLAZING AREA OF NOT LESS THAN 8% OF THE FLOOR AREA OF THE ROOM. GLAZED AREAS ARE NOT REQUIRED WHERE ARTIFICIAL LIGHTING ARE PROVIDED.

BATH ROOMS: ALL STUD WALLS AT TUB AND SHOWER STALLS SHALL HAVE FIREBLOCKING BETWEEN STUDS. ALL GLAZING IN DOORS OR ENCLOSURES IN BATHROOMS SHALL BE SAFITT GLAZING. GLAZING IN ANY PORTION OF A BUILDING WALL ENCLOSING A SHOWER OR BATHTUB WHERE THE BOTTOM EXPOSED EDGE IS LESS THAN 60"ABOVE THE STANDING SURFACE AND DRAIN OUTLET SHALL BE SAFITT GLAZING. SHOWER STALL WAINSCOT SHALL BE A MINIMUM OF 72" ABOVE THE FLOOR. WATERCLOSETS SHALL HAVE A MIN. 15" TO SIDE WALLS FROM CENTER OF FIXTURE, AND A MINIMUM 21" CLEA.RANCE IN FRONT OF THE FIXTURE.

APPLIANCES: APPLIANCES IN A FIXED POSITION SHALL BE SECURELY FASTENED IN PLACE TO STRUCTURAL MEMBERS WITH STRAP ANCHORS OR SIMILAR ANCHORING METHOD. IRC G2404.4.

DRYROT: CONTRACTOR SHALL CHECK FOR DRYROT AT ALL EXTERIOR WALLS, EXISITNG TOILET ROOM FLOORS AND WALLS, AREAS SHOWING WATER STAINS, AND ALL WOOD MEMBERS IN BASEMENT AND CRAWL SPACES. ALL ROT SHALL BE REMOVED AND DAMAGED MEMBERS SHALL BE REPLACED OR REPAIRED AS DIRECTED BY THE STRUCTURAL ENGINEER.

MECHANICAL VENTILATION: PROVIDE MECHANICAL VENTILATION CAPABLE OF PROVIDING FIVE AIR CHANGES PER HOUR IN BATHROOMS CONTAINING TUBS OR SHOWERS, LAUNDRY ROOMS AND SIMILAR ROOMS, IF REQUIRED OPENABLE WINDOWS ARE NOT PROVIDED (DUCTLESS FANS ARE NOT ACCEPTABLE IN ROOMS CONTAINING TUBS OR SHOWERS)

FOOTINGS AND FOUNDATIONS: TO BE UNDISTURBED FIRM NATURAL SOIL OR COMPACTED SOIL OF 2,000 PSF BEARING CAPACITY AT LEAST 1'-0" BELOW LOWEST ADJACENT GRADE, FREE OF ORGANIC MATERIALS. FOOTING AND FOUNDATION EXCAVATION SHALL BE FREE OF LOOSE SOILS, SLOUGHS, DEBRIS, AND FREE STANDING WATER AT ALL TIMES. RETAINING WALLS ARE DEISGNED FOR 35 PSF. ACTIVE SOIL PRESSURE, 250 PSF PASSIVE SOUL PRESSURE. ALL FILL PLACED TO SUPPORT SLABS ON GRADE, BEHIND PERMANENT WALLS, AND AROUND ALL DRAINS SHALL CONSIST OF WALL GRADED, GRANULAR MATERIAL PER THE SPECIFICATIONS. SOILS FOR STRUCTURAL FILL SHALL BE APPROVED BY THE GEOTECHNICAL ENGINEER. STRUCTURAL FILL SHALL BE PLACED ON SOUNDS NATIVE MATERIAL. PROOF-ROLL CUT AREAS WHICH PROVIDE SUPPORT FOR PERMANENTS STRUCTURES. AREAS WHICH ARE EXCESSIGVELY YIELDING, AS DETERMINED BY THE CONTINUOUS OBSERVATION OF THE GEOTECHNICAL ENGINEER, SHALL BE OVEREXCAVATED AND REPLACED WITH STRUCTURE FILL. STRUCTURE FILL SHALL BE PLACED PER THE GEOTECHNICAL RECOMMENDATIONS.

CONCRETE: CONCRETE TO BE MIXED, PROPORTIONED, CONVEYED AND PLACED IN ACCORDANCE WITH THE IBC AND ACI 301. FC= 2,500 PSI@ 28 DAYS, MAX SLUMP 4", MAX. AGGREGATE 1-1/2". CEMENT MAY BE REPLACED WITH FLYASH 1:1 WEIGHT RATIO UP TO 50% ALL CONCRETE SHALL BE REINFORCED. ALL ANCHOR BOLTS SHALL BE ASTM A-307, 5/8" DIAMETER, EMBEDDED A MIN. OF 7" INTO CONCRETE WITH HOOK, U.N.O. MINIMUM 2 BOLTS PER SILL PLATE PIECE WTIH ONE BOLT TO BE PLACED WITHIN 12" OF EACH END OF THE SILL PLATE. NON-SHRINK GROUT SHALL BE FURNISHED BY AN APPORVED MANUFACTURER AND SHALL BE MIXED AND PLACED IN STRICT ACCORDANCE WITH THE MANUFATURERS PUBLISHED RECOMMENDATIONS. GROUT STRENGHT SHALL BE AT LEAST EQUAL TO THE MATERIAL ON WHICH IT IS PLACED (3000 PSI MINIMUM.) EPOXY GROUTED ITEMS SPECIFIED ON THE DRAWINGS SHALL BE GROUTED WITH "SET" HIGH STRENGHT EPOXY AS MANUFACTURED BY THE SIMPSON COMPANY AND INSTALLED BY STRICT ACCORDANCE.

EPOXY ADHESIVE: EPOXY ADHESIVE SHALL CONFORM TO ASTM C881 FOR BONDING STEELS TO HARDEN CONCRETE. EPOXY ADHESIVE SHALL BE USED FOR DRILLED AND GROUTED REINFORCING BARS OR BOLTS UNLESS NOTED OTHERWISE. EPOXY SHALL BE ICBO APPROVED AND SHALL BE MIXED, APPLIED AND CURED IN STRUCT ACCORDANCE WITH THE ICBO REPORT. ALL PLACEMENT AND CURING SHALL BE CONDUCTED WITH CONCRETE AND AIR TEMPERATURES ABOVE 50 DEGREES. APPLY EPOXY ONLY TO CLEAN, DRY CONCRETE. PROVIDE POSITIVE PROTECTION SO ANCHORS ARE NOT DISTRURBED DURING THE CURING PERIOR. HOLES FOR DOWELS AND BOLTS SHALL BE DRILLED WITH TORARY IMPACT HAMMER OR EQUIVALENT METHOD TO PRODUCE A HOLE WITH A ROUGH INSIDE SURFACE. NO REINFORCING SHALL BE CUT TO INSTALL DOWELS, BARS, OR BOLTS.

FRAMING LUMBER: THE FOLLOWING APPLY UNLESS NOTED OTHERWISE ON THE PLANS. ALL WOOD FRAMING DETAILS NOT SHOWN OTHERWISE SHALL BE CONSTRUCTED TO THE MINIMUM STANDARDS OF THE INTERNATIONAL BUILDING CODE. MINIMUM NIALING, UNLESS OTHERWISE NOTED. UNLESS NOTED OTHERWISE, ALL NAILS SHALL BE COMMON. COORDINATE THE SIZE AND LOCATION OF ALL OPENINGS WITH MECHANICAL ARCHITECTURAL DRAWINGS. ALL WOOD FRAME CONSTRUCTION SHALL CONFORM TO THE STANDARDS OF THE IBC AS A MINIMUM REQUIREMENT. ALL WOOD IN DIRECT CONTACT WITH CONCRETE OR MASONRY SHALL BE PRESSURE-TREATED WITH AN APPROVED PRESERVATIVE OR (2) LAYERS OF ASPHALT IMPREGNATED BUILDING PAPER SHALL BE PROVIDED BETWEEN UNTREATED WOOD AND CONCRETE OR MASONRY. ALL WOOD EXPOSED TO WEATERH WITHOUT THE ADEQUATE PROTECTION OF A ROOF OR EAVE SHALL BE AN APPROVED WOOD OF NATURAL RESISTANCE TO DECAY OR PRESSURE TREATED. SUCH MEMBERS INCLUDE HORIZONTAL MEMBERS SUCH AS GIRDERS, JOIST, DECKING, OR VERTICAL MEMBERS SUCE AS POSTS, POLES AND COLUMNS.

SHEATING: PLYWOOD SHEATHING SHALL BE GRADE C-D, EXTERIOR GLUE OR STRUCTURAL II, EXTERIOR GLUE SHALL BE IN CONFORMANCE WITH APA STANDARDS. ORIENTED STRAND BOARD OF EQUIVALENT THICKNESS, EXPOSURE RATING AND PANEL INDEX MAY BE USED IN LIEU OF PLYWOOD. PLYWOODROOF AND FLOOR SHETHING TO BE LAID UP WITH GRAIN PERPENDICULAR TO SUPPORTS AND NAILED WITH 8D NAILS AT 6" O.C. TO FRAMED PANEL EDGES AND OVER STUD WALLS AS SHOWN ON PLANS AND AT 12" O.C. TO INTERMEDIATE SUPPORTS UNLESS NOTED OTHERWISE. PROVIDE APPORVED PLYWOOD EDGE CLIPS AT 16" O.C. AT UNBLOCKED ROOF SHEATHING EDGES. ALL FLOOR SHEATHING EDGES HAVE APPROVED TONGUE-AND-SUPPORTS WITH 16D @ 12" O.C. UNLESS NOTED OTHERWISE. AT BLOCKED FLOOR AND ROOF DIAPHRAGMS PROVIDE FLAT 2X BLOCKING AT ALL UNFRAMED PLYWOOD PANEL EDGES AND NAIL WITH EDGE NAILING SPECIFIED.

MISCELLANEOUS: REFER TO ARCHITECTURAL, MECHANICAL, ELECTRICAL, CIVIL, ELEVATOR OR OTHER SPECIALTY ENGINEERING DRAWINGS FOR DIMENSIONS NOT SHOW, INCLUDING BUT NOT LIMITED TO: SIZE AND LOCATION OF CURBS, EQUIPMENT HOUSEKEEPING PADS, WALL AND FLOOR OPENINGS, BLOCKOUTS, FLOOR DEPRESSIONS, SUMPS, DRAINS, ANCHOR BOLTS, EMBEDDED ITEMS, ARCHITECTURAL TREATMENT, ETC. CONTRACTOR SHALL VERIFY DIMENSIONS AND RESOVE DISCREPENCIES OR CONFLICTS PRIOR TO CONSTRUCTION.

D.WorkShop - 74

3766 FOSTER AVE.
BALDWIN PARK, CA. 91706
tel. 626.712.1718

RESIDENTIAL ADDITION

THIS DRAWING IS AN INSTRUMENT OF SERVICE. IS THE PROPERTY OF THE DESIGNER AND MAY NOT BE REPRODUCED WITHOUT THE DESIGNERS PERMISSION AND UNLESS THE REPRODUCTION CARRIES THE DESIGNERS NAME. ALL DESIGN AND OTHER INFORMATION SHOWN ON THE DRAWING ARE FOR USE ON THE SPECIFIED PROJECT ONLY AND SHALL NOT BE USED OTHERWISE WITHOUT WRITTEN PERMISSION FROM THE DESIGNER

WISCONSIN RESIDENCE

1207 WISCONSIN ST.
POMONA, CA. 91768

Consultants

Approvals:

Key Plan:

NOTES:
MECHANICAL, ELECTRICAL, AND PLUMBING PERMITS TO BE PULLED SEPARATELY.

Submittals	Date
submittal 1	08.07.2017

No.	Revision	Date
1		02.05.2018

Sheet Title

A1

Job No.	Date	Scale
0006	02.20.2018	TBD

GENERAL NOTES

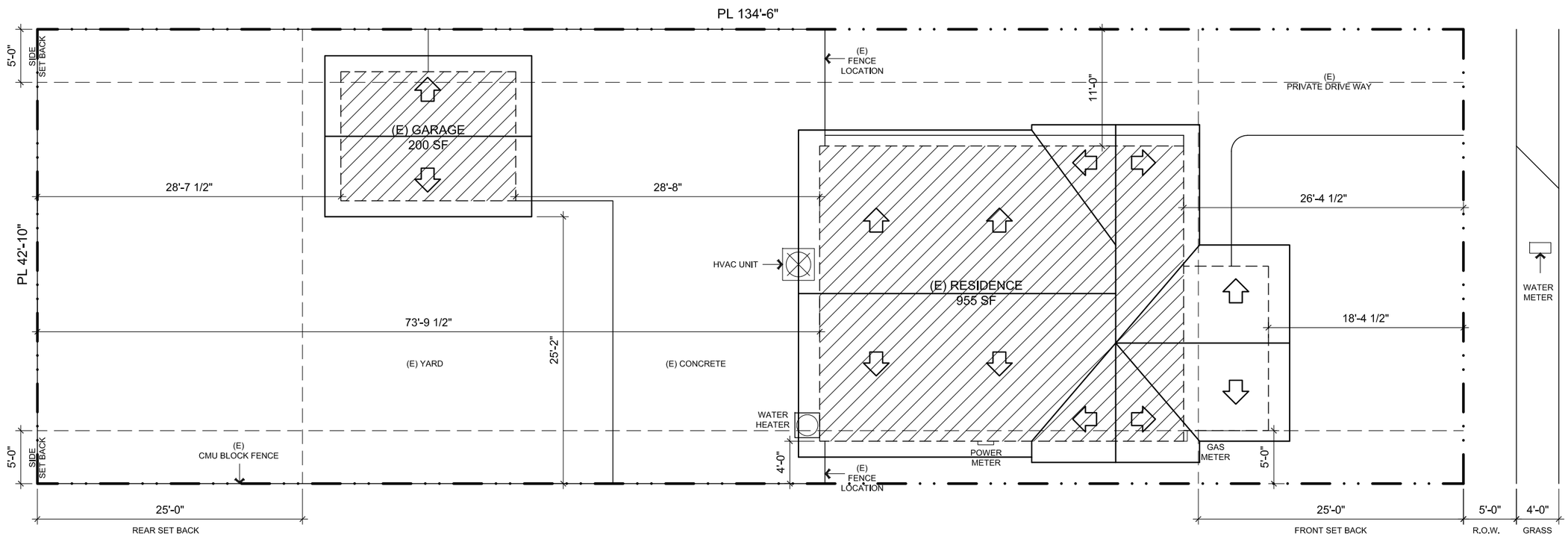

EXISTING SITE PLAN

SCALE 3/32"=1'-0"

D.WorkShop - 74

3766 FOSTER AVE.
BALDWIN PARK, CA. 91706
tel. 626.712.1718

RESIDENTIAL ADDITION

THIS DRAWING IS AN INSTRUMENT OF SERVICE, IS THE PROPERTY OF THE DESIGNER AND MAY NOT BE REPRODUCED WITHOUT THE DESIGNERS PERMISSION AND UNLESS THE REPRODUCTION CARRIES THE DESIGNERS NAME. ALL DESIGN AND OTHER INFORMATION SHOWN ON THE DRAWING ARE FOR USE ON THE INTENDED PROJECT ONLY AND SHALL NOT BE USED OTHERWISE WITHOUT WRITTEN PERMISSION FROM THE DESIGNER.

WISCONSIN RESIDENCE

1207 WISCONSIN ST.
POMONA, CA. 91768

Consultants

Approvals:

Key Plan:

NOTES:

MECHANICAL, ELECTRICAL, AND PLUMBING PERMITS TO BE PULLED SEPARATELY.

Submittals	Date
submittal 1	08.07.2017

No.	Revision	Date
1		02.05.2018

Sheet Title

A1.1

Job No.	Date	Scale
0006	02.20.2018	TBD

(E) SITE PLAN

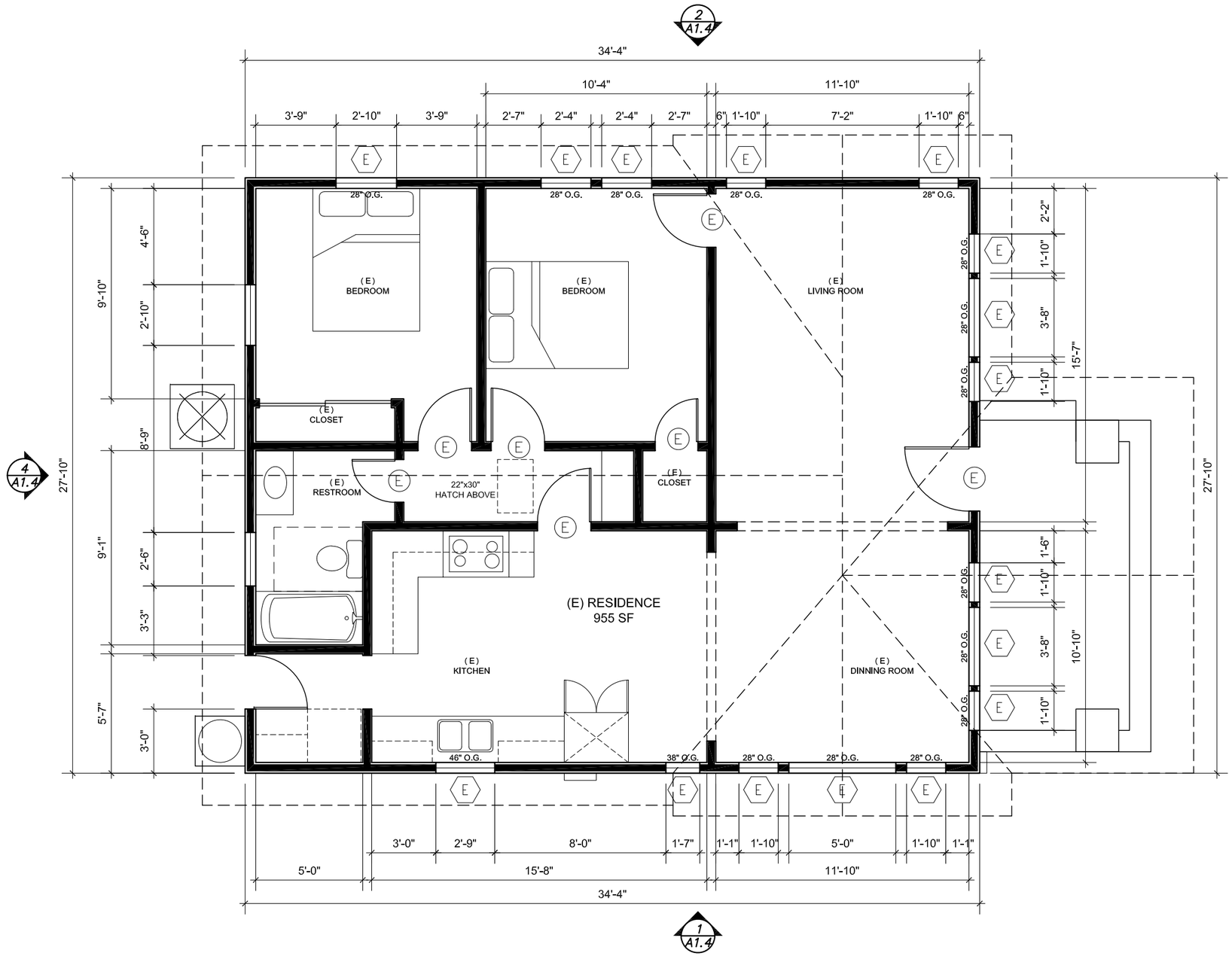

EXISTING FLOOR PLAN

SCALE 3/16"=1'-0"

D.WorkShop - 74

3766 FOSTER AVE.
BALDWIN PARK, CA. 91706
tel. 626.712.1718

RESIDENTIAL ADDITION

THIS DRAWING IS AN INSTRUMENT OF SERVICE, IS THE PROPERTY OF THE DESIGNER AND MAY NOT BE REPRODUCED WITHOUT THE DESIGNERS PERMISSION AND UNLESS THE REPRODUCTION CARRIES THE DESIGNERS NAME. ALL DESIGN AND OTHER INFORMATION SHOWN ON THE DRAWING ARE FOR USE ON THE INTENDED PROJECT ONLY AND SHALL NOT BE USED OTHERWISE WITHOUT WRITTEN PERMISSION FROM THE DESIGNER.

WISCONSIN RESIDENCE

1207 WISCONSIN ST.
POMONA, CA. 91768

Consultants

Approvals:

Key Plan:

NOTES:

MECHANICAL, ELECTRICAL, AND PLUMBING PERMITS TO BE PULLED SEPARATELY.

Submittals	Date
submittal 1	08.07.2017

No.	Revision	Date
1		02.05.2018

Sheet Title

A1.2

Job No.	Date	Scale
0006	02.20.2018	TBD

(E) FLOOR PLAN

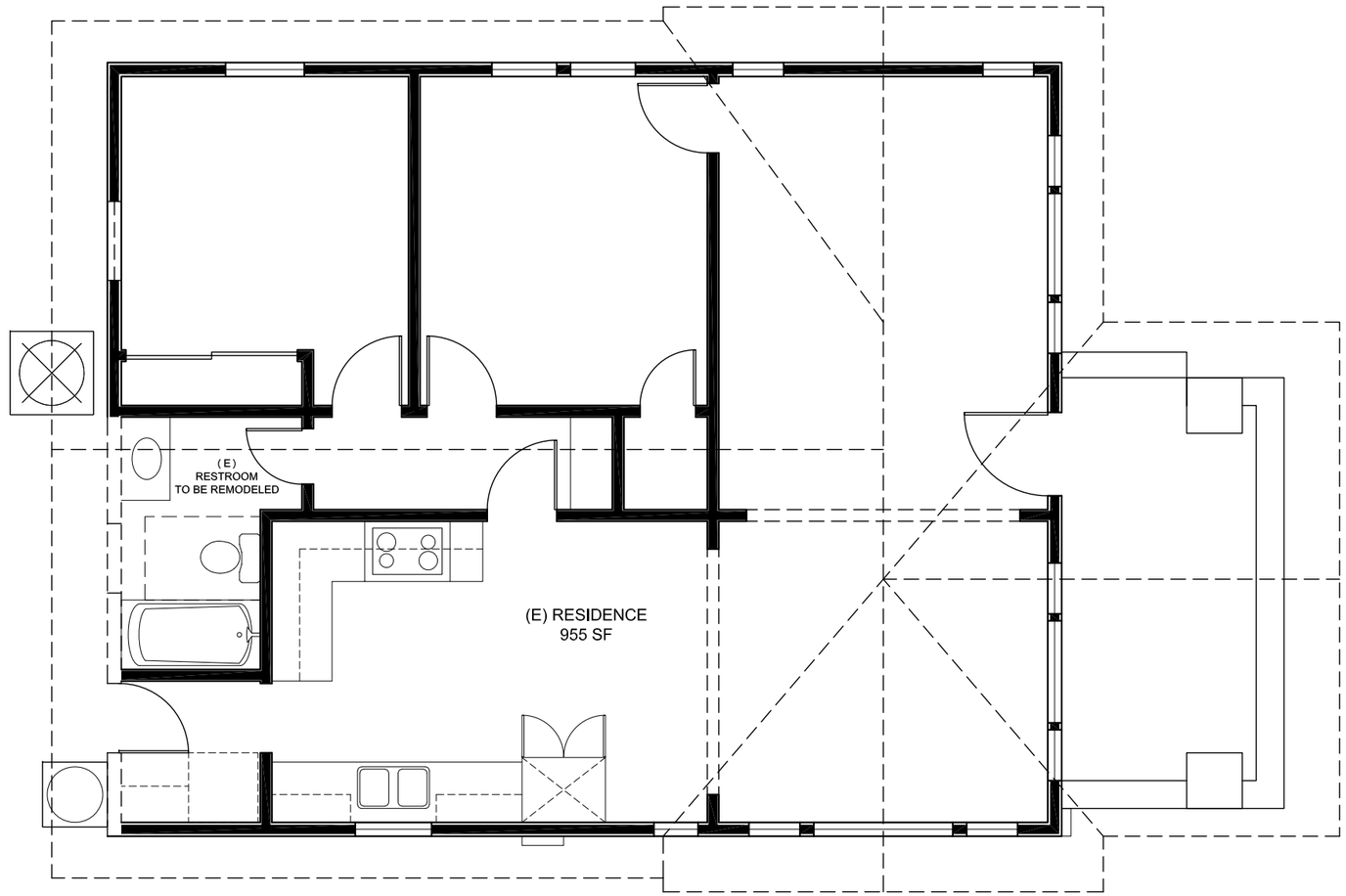

DEMOLITION PLAN

SCALE 3/16"=1'-0"

D.WorkShop - 74

3766 FOSTER AVE.
BALDWIN PARK, CA. 91706
tel. 626.712.1718

RESIDENTIAL ADDITION

THIS DRAWING IS AN INSTRUMENT OF SERVICE, IS THE PROPERTY OF THE DESIGNER AND MAY NOT BE REPRODUCED WITHOUT THE DESIGNERS PERMISSION AND UNLESS THE REPRODUCTION CARRIES THE DESIGNERS NAME. ALL DESIGN AND OTHER INFORMATION SHOWN ON THE DRAWING ARE FOR USE ON THE INTENDED PROJECT ONLY AND SHALL NOT BE USED OTHERWISE WITHOUT WRITTEN PERMISSION FROM THE DESIGNER

WISCONSIN RESIDENCE

1207 WISCONSIN ST.
POMONA, CA. 91768

Consultants

Approvals:

Key Plan:

NOTES:

MECHANICAL, ELECTRICAL, AND PLUMBING PERMITS TO BE PULLED SEPARATELY.

Submittals	Date
submittal 1	08.07.2017

No.	Revision	Date
1		02.05.2018

Sheet Title

A1.3

Job No.	Date	Scale
0006	02.20.2018	TBD

DEMO PLAN

PATH: G:\Users\Vikram Sanghera\Dropbox\Projects\0006_Vikramsen\CAD\0006_Vikramsen.dwg DATE: 02/20/18 9:52pm LOGIN: VKsen
XRFS: Design\Arch\Xrefs\0006_Base\0006_Base.dwg

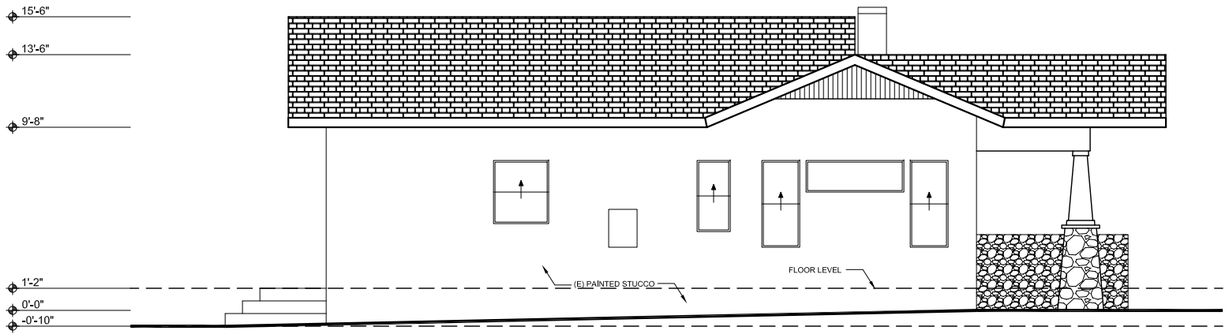

1 EXISTING SOUTH ELEVATION

SCALE 1/8"=1'-0"

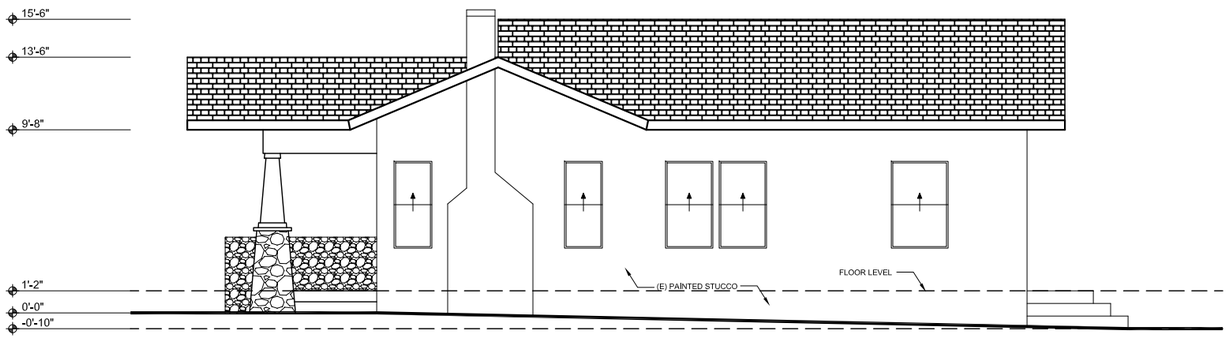

2 EXISTING NORTH ELEVATION

SCALE 1/8"=1'-0"

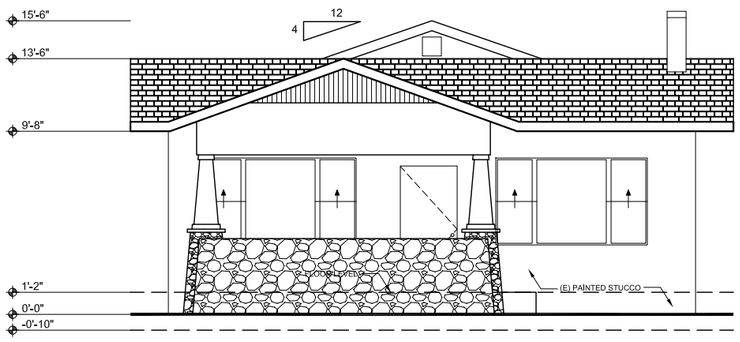

3 EXISTING EAST ELEVATION

SCALE 1/8"=1'-0"

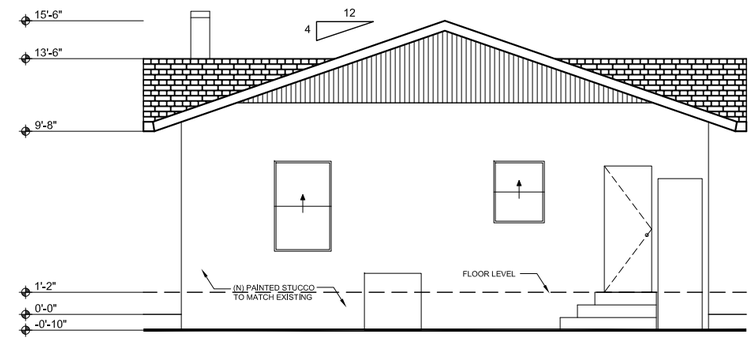

4 EXISTING WEST ELEVATION

SCALE 1/8"=1'-0"

D.WorkShop - 74

3766 FOSTER AVE.
BALDWIN PARK, CA. 91706
tel. 626.712.1718

RESIDENTIAL ADDITION

THIS DRAWING IS AN INSTRUMENT OF SERVICE, IS THE PROPERTY OF THE DESIGNER AND MAY NOT BE REPRODUCED WITHOUT THE DESIGNERS PERMISSION AND UNLESS THE REPRODUCTION CARRIES THE DESIGNERS NAME. ALL DESIGN AND OTHER INFORMATION SHOWN ON THE DRAWING ARE FOR USE ON THE SPECIFIED PROJECT ONLY AND SHALL NOT BE USED OTHERWISE WITHOUT WRITTEN PERMISSION FROM THE DESIGNER

WISCONSIN RESIDENCE

1207 WISCONSIN ST.
POMONA, CA. 91768

Consultants

Approvals:

Key Plan:

NOTES:

MECHANICAL, ELECTRICAL, AND PLUMBING PERMITS TO BE PULLED SEPARATELY.

Submittals	Date
submittal 1	08.07.2017

No.	Revision	Date
1		02.05.2018

Sheet Title

A1.4

Job No.	Date	Scale
0006	02.20.2018	TBD

(E) ELEVATIONS

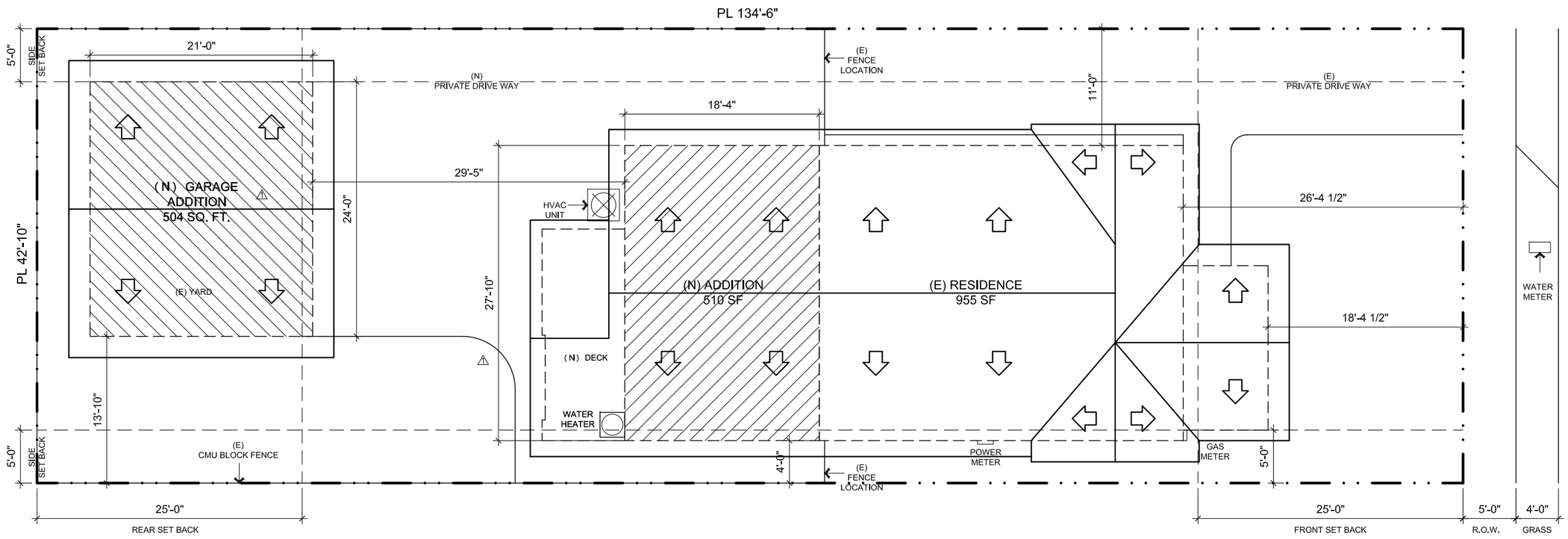

NEW SITE PLAN

SCALE 3/32"=1'-0"

D.WorkShop - 74

3766 FOSTER AVE.
BALDWIN PARK, CA. 91706
tel. 626.712.1718

RESIDENTIAL ADDITION

THIS DRAWING IS AN INSTRUMENT OF SERVICE, IS THE PROPERTY OF THE DESIGNER AND MAY NOT BE REPRODUCED WITHOUT THE DESIGNERS PERMISSION AND UNLESS THE REPRODUCTION CARRIES THE DESIGNERS NAME. ALL DESIGN AND OTHER INFORMATION SHOWN ON THE DRAWING ARE FOR USE ON THE SPECIFIED PROJECT ONLY AND SHALL NOT BE USED OTHERWISE WITHOUT WRITTEN PERMISSION FROM THE DESIGNER.

WISCONSIN RESIDENCE

1207 WISCONSIN ST.
POMONA, CA. 91768

Consultants

Approvals:

Key Plan:

NOTES:

MECHANICAL, ELECTRICAL, AND PLUMBING PERMITS TO BE PULLED SEPARATELY.

Submittals	Date
submittal 1	08.07.2017

No.	Revision	Date
1		02.05.2018

Sheet Title

A2

Job No.	Date	Scale
0006	02.20.2018	TBD

(N) SITE PLAN

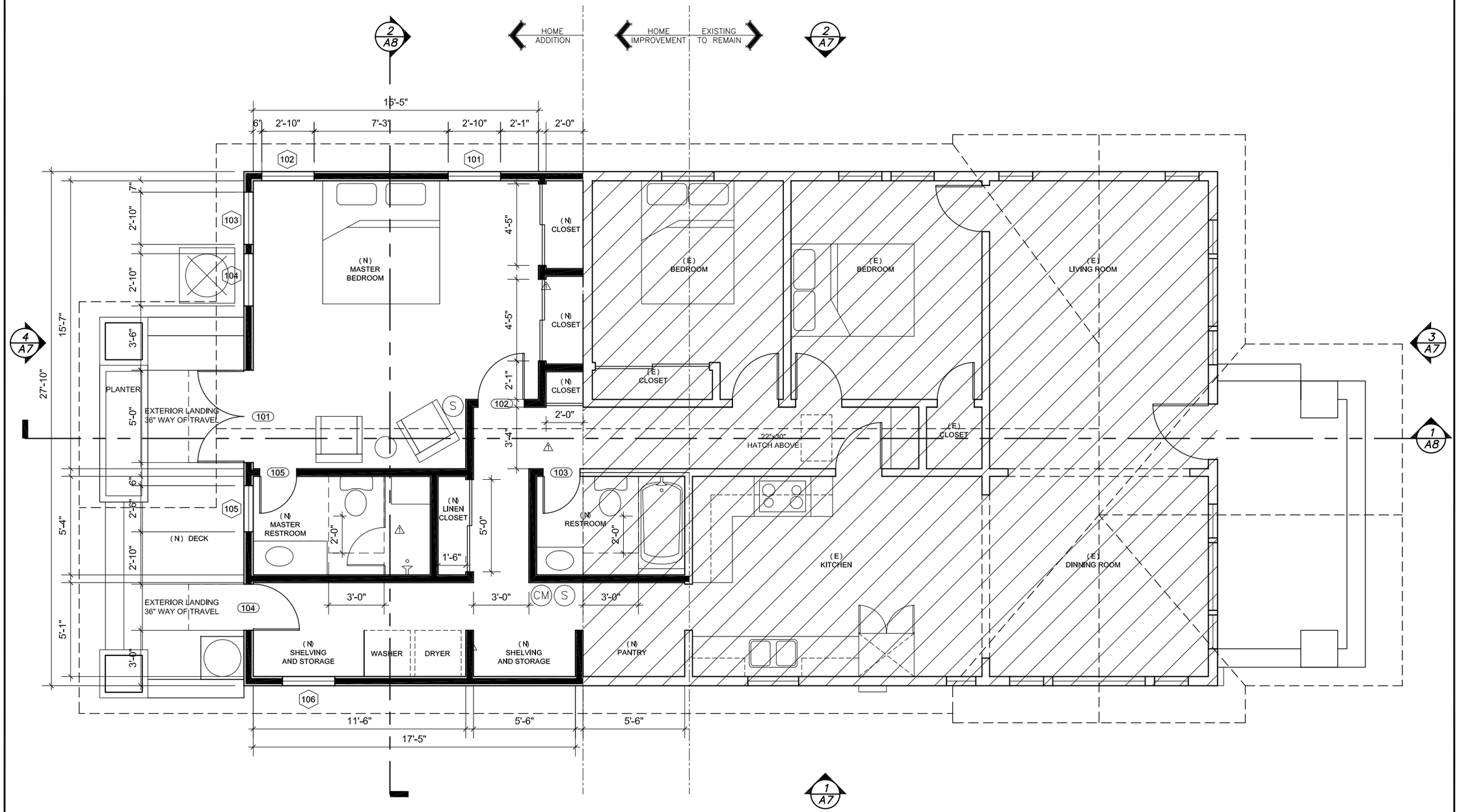

NEW FLOOR PLAN

SCALE 3/16"=1'-0"

D.WorkShop - 74

3766 FOSTER AVE.
BALDWIN PARK, CA. 91706
tel. 626.712.1718

RESIDENTIAL ADDITION

THIS DRAWING IS AN INSTRUMENT OF SERVICE, IS THE PROPERTY OF THE DESIGNER AND MAY NOT BE REPRODUCED WITHOUT THE DESIGNERS PERMISSION AND UNLESS THE REPRODUCTION CARRIES THE DESIGNERS NAME. ALL DESIGN AND OTHER INFORMATION SHOWN ON THE DRAWING ARE FOR USE ON THE SPECIFIED PROJECT ONLY AND SHALL NOT BE USED OTHERWISE WITHOUT WRITTEN PERMISSION FROM THE DESIGNER.

WISCONSIN RESIDENCE

1207 WISCONSIN ST.
POMONA, CA. 91768

Consultants

Approvals:

Key Plan:

NOTES:

MECHANICAL, ELECTRICAL, AND PLUMBING PERMITS TO BE PULLED SEPARATELY.

Submittals	Date
submittal 1	08.07.2017

No.	Revision	Date
1		02.05.2018

Sheet Title

A3

Job No.	Date	Scale
0006	02.20.2018	TBD

(N) FLOOR PLAN

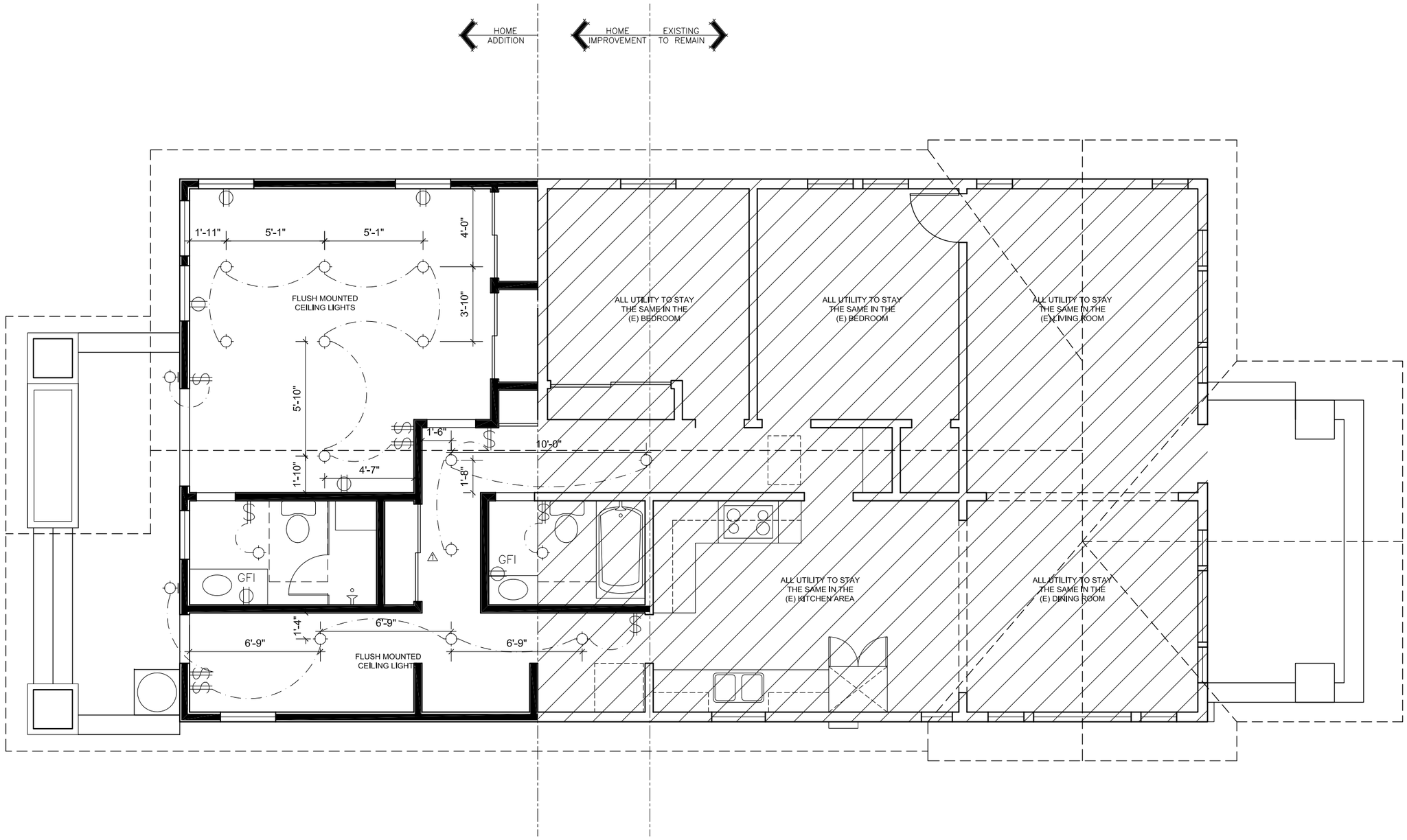

NEW UTILITY PLAN

SCALE 3/16"=1'-0"

D.WorkShop - 74

3766 FOSTER AVE.
BALDWIN PARK, CA. 91706
tel. 626.712.1718

RESIDENTIAL ADDITION

THIS DRAWING IS AN INSTRUMENT OF SERVICE, IS THE PROPERTY OF THE DESIGNER AND MAY NOT BE REPRODUCED WITHOUT THE DESIGNERS PERMISSION AND UNLESS THE REPRODUCTION CARRIES THE DESIGNERS NAME. ALL DESIGN AND OTHER INFORMATION SHOWN ON THE DRAWING ARE FOR USE ON THE SPECIFIED PROJECT ONLY AND SHALL NOT BE USED OTHERWISE WITHOUT WRITTEN PERMISSION FROM THE DESIGNER.

WISCONSIN RESIDENCE

1207 WISCONSIN ST.
POMONA, CA. 91768

Consultants

Approvals:

Key Plan:

NOTES:

MECHANICAL, ELECTRICAL, AND PLUMBING PERMITS TO BE PULLED SEPARATELY.

Submittals	Date
submittal 1	08.07.2017

No.	Revision	Date
1		02.05.2018

Sheet Title

A4

Job No.	Date	Scale
0006	02.20.2018	TBD

UTILITY PLAN

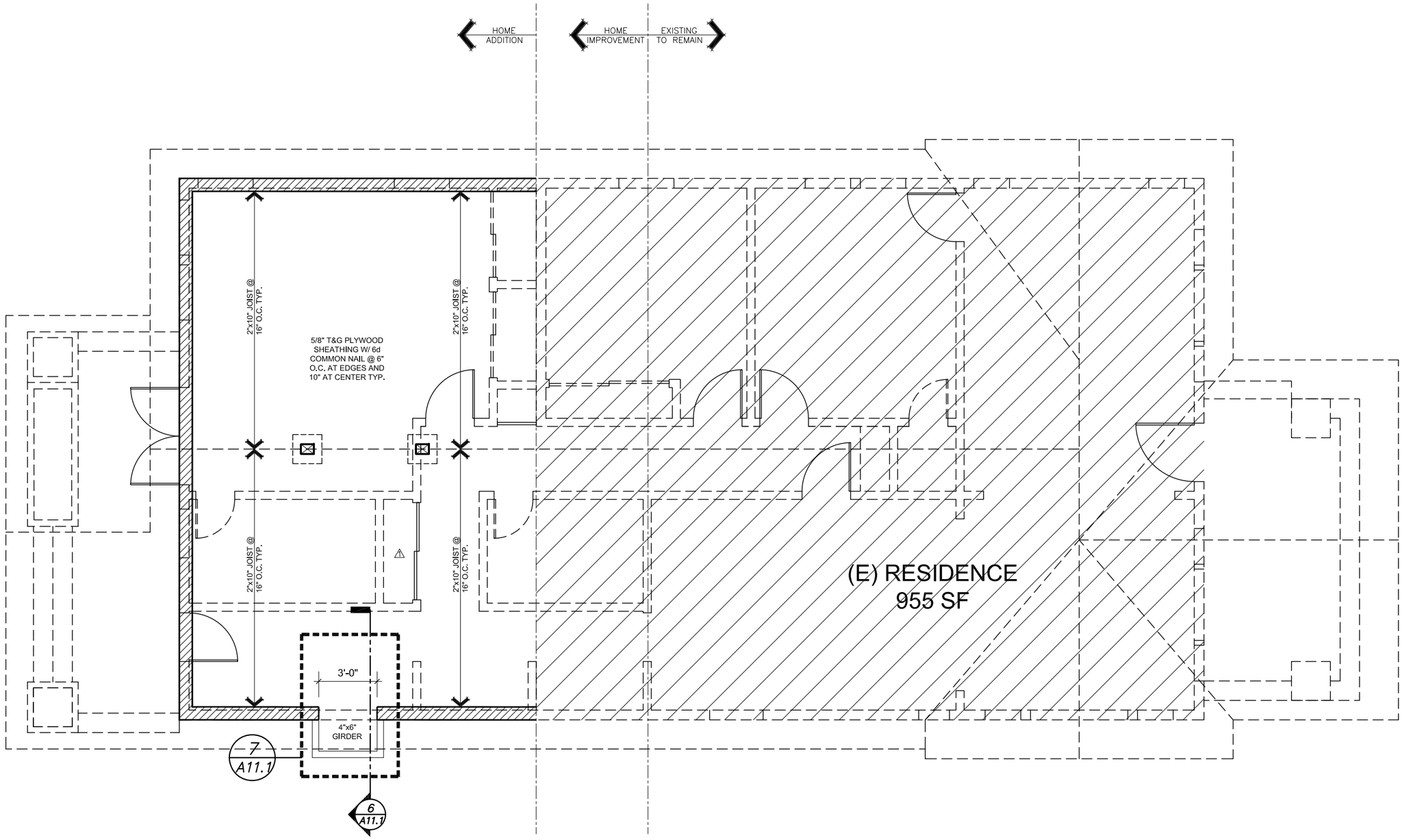

NEW FOUNDATION PLAN

SCALE 3/16"=1'-0"

D.WorkShop - 74

3766 FOSTER AVE.
BALDWIN PARK, CA. 91706
tel. 626.712.1718

RESIDENTIAL ADDITION

THIS DRAWING IS AN INSTRUMENT OF SERVICE, IS THE PROPERTY OF THE DESIGNER AND MAY NOT BE REPRODUCED WITHOUT THE DESIGNERS PERMISSION AND UNLESS THE REPRODUCTION CARRIES THE DESIGNERS NAME. ALL DESIGN AND OTHER INFORMATION SHOWN ON THE DRAWING ARE FOR USE ON THE SPECIFIED PROJECT ONLY AND SHALL NOT BE USED OTHERWISE WITHOUT WRITTEN PERMISSION FROM THE DESIGNER

WISCONSIN RESIDENCE

1207 WISCONSIN ST.
POMONA, CA. 91768

Consultants

Approvals:

Key Plan:

NOTES:

MECHANICAL, ELECTRICAL, AND PLUMBING PERMITS TO BE PULLED SEPARATELY.

Submittals	Date
submittal 1	08.07.2017

No.	Revision	Date
1		02.05.2018

Sheet Title

A5

Job No.	Date	Scale
0006	02.20.2018	TBD

FOUNDATION

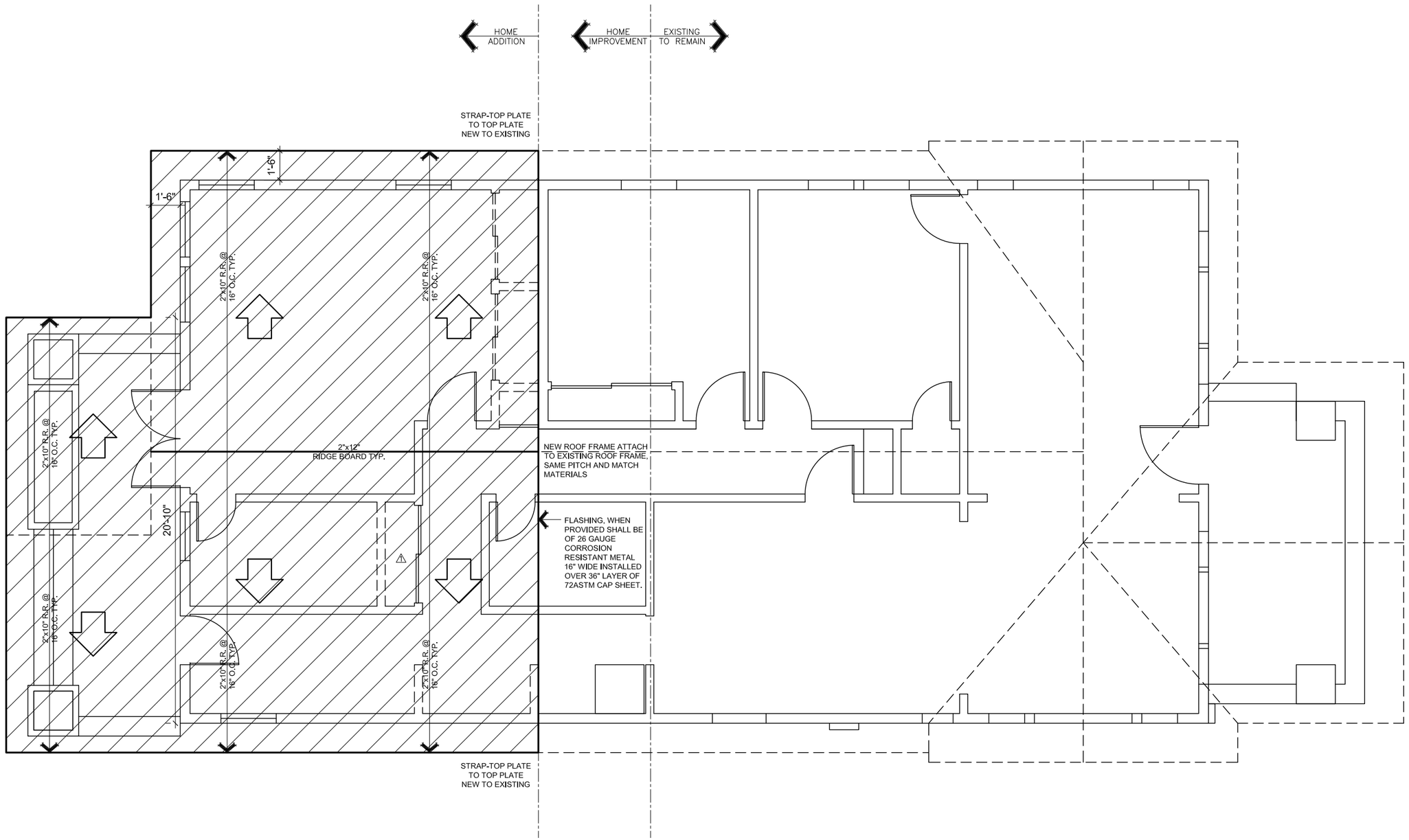

NEW ROOF PLAN

SCALE 3/16"=1'-0"

D.WorkShop - 74

3766 FOSTER AVE.
BALDWIN PARK, CA. 91706
tel. 626.712.1718

RESIDENTIAL ADDITION

THIS DRAWING IS AN INSTRUMENT OF SERVICE, IS THE PROPERTY OF THE DESIGNER AND MAY NOT BE REPRODUCED WITHOUT THE DESIGNERS PERMISSION, AND UNLESS THE REPRODUCTION CARRIES THE DESIGNERS NAME. ALL DESIGN AND OTHER INFORMATION SHOWN ON THE DRAWING ARE FOR USE ON THE SPECIFIED PROJECT ONLY AND SHALL NOT BE USED OTHERWISE WITHOUT WRITTEN PERMISSION FROM THE DESIGNER

WISCONSIN RESIDENCE

1207 WISCONSIN ST.
POMONA, CA. 91768

Consultants

Approvals:

Key Plan:

NOTES:

MECHANICAL, ELECTRICAL, AND PLUMBING PERMITS TO BE PULLED SEPARATELY.

Submittals	Date
submittal 1	08.07.2017

No.	Revision	Date
1		02.05.2018

Sheet Title

A6

Job No.	Date	Scale
0006	02.20.2018	TBD

ROOF PLAN

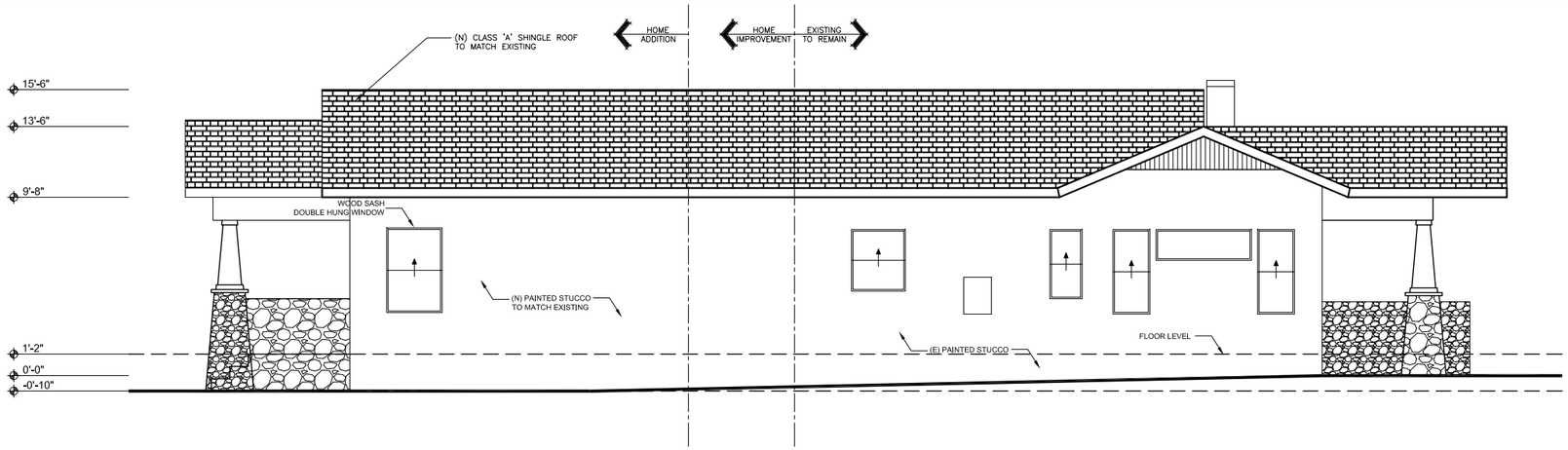

1 NEW SOUTH ELEVATION

SCALE 1/8"=1'-0"

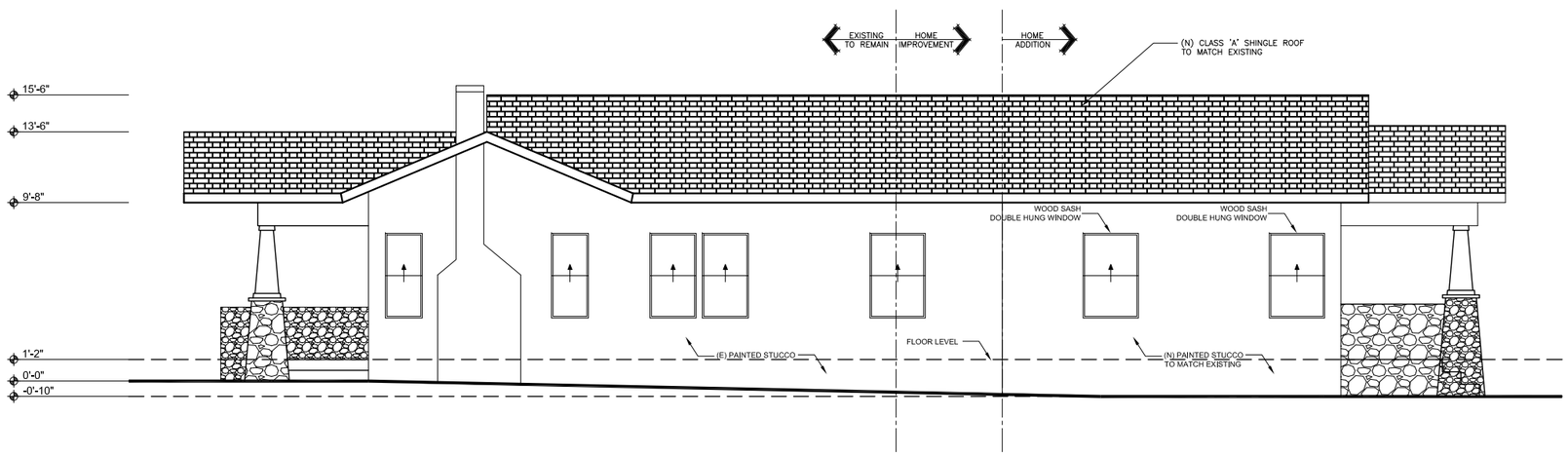

2 NEW NORTH ELEVATION

SCALE 1/8"=1'-0"

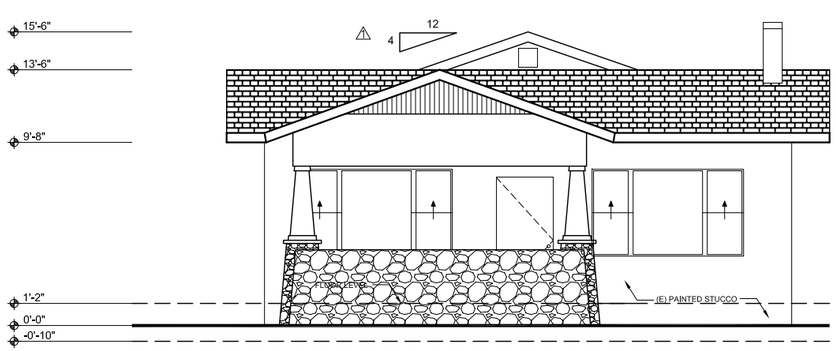

3 NEW EAST ELEVATION

SCALE 1/8"=1'-0"

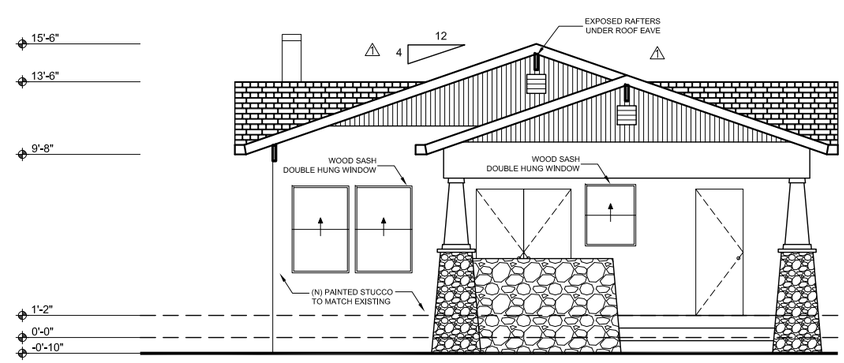

4 NEW WEST ELEVATION

SCALE 1/8"=1'-0"

D.WorkShop - 74

3766 FOSTER AVE.
BALDWIN PARK, CA. 91706
tel. 626.712.1718

RESIDENTIAL ADDITION

THIS DRAWING IS AN INSTRUMENT OF SERVICE, IS THE PROPERTY OF THE DESIGNER AND MAY NOT BE REPRODUCED WITHOUT THE DESIGNERS PERMISSION AND UNLESS THE REPRODUCTION CARRIES THE DESIGNERS NAME. ALL DESIGN AND OTHER INFORMATION SHOWN ON THE DRAWING ARE FOR USE ON THE SPECIFIED PROJECT ONLY AND SHALL NOT BE USED OTHERWISE WITHOUT WRITTEN PERMISSION FROM THE DESIGNER

WISCONSIN RESIDENCE

1207 WISCONSIN ST.
POMONA, CA. 91768

Consultants

Approvals:

Key Plan:

NOTES:
MECHANICAL, ELECTRICAL, AND PLUMBING PERMITS TO BE PULLED SEPARATELY.

Submittals	Date
submittal 1	08.07.2017

No.	Revision	Date
1		02.05.2018

Sheet Title

A7

Job No.	Date	Scale
0006	02.20.2018	TBD

(N) ELEVATIONS

PATH: C:\Users\Vision\Dropbox\Work\Projects\0006_Wisconsin\CAD\0006_Wisconsin.dwg DATE: 02/20/18 9:58pm LSCTR: VRom
WS1 | Dwg-Set | Arch | Floor | XR: Arch-0978, Arch-0979, Arch-0980

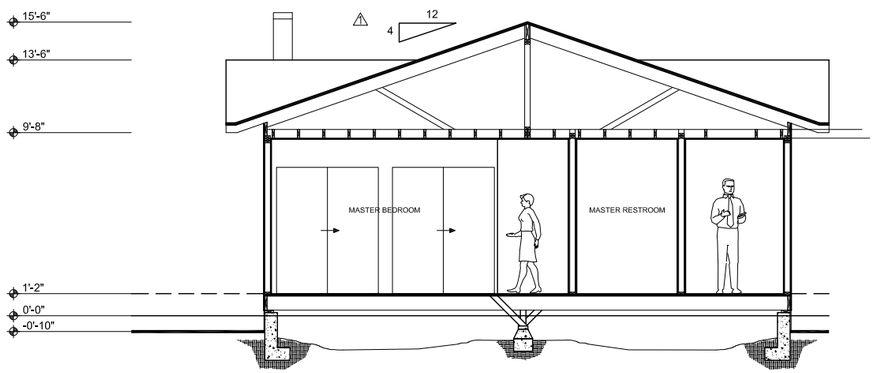

2 SHORT CROSS SECTION

SCALE 1/8"=1'-0"

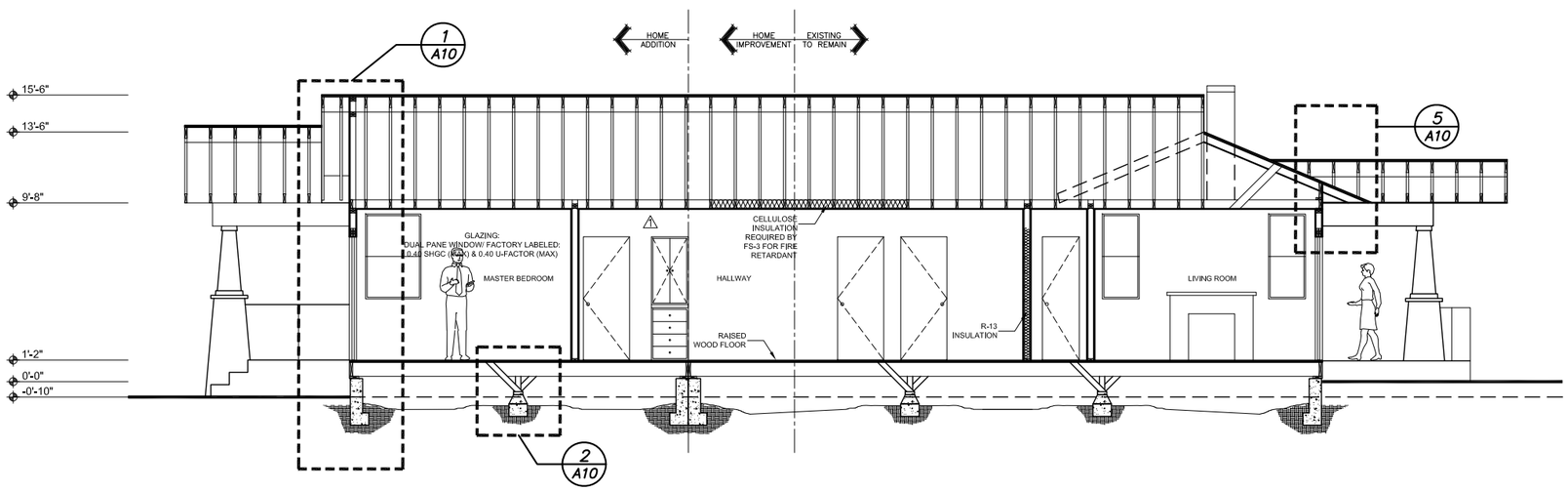

1 LONG CROSS SECTION

SCALE 1/8"=1'-0"

D.WorkShop - 74

3766 FOSTER AVE.
BALDWIN PARK, CA. 91706
tel. 626.712.1718

RESIDENTIAL ADDITION

THIS DRAWING IS AN INSTRUMENT OF SERVICE, IS THE PROPERTY OF THE DESIGNER AND MAY NOT BE REPRODUCED WITHOUT THE DESIGNERS PERMISSION, AND UNLESS THE REPRODUCTION CARRIES THE DESIGNERS NAME. ALL DESIGN AND OTHER INFORMATION SHOWN ON THE DRAWING ARE FOR USE ON THE SPECIFIED PROJECT ONLY AND SHALL NOT BE USED OTHERWISE WITHOUT WRITTEN PERMISSION FROM THE DESIGNER.

WISCONSIN RESIDENCE

1207 WISCONSIN ST.
POMONA, CA. 91768

Consultants

Approvals:

Key Plan:

NOTES:

MECHANICAL, ELECTRICAL, AND PLUMBING PERMITS TO BE PULLED SEPARATELY.

Submittals	Date
submittal 1	08.07.2017

No.	Revision	Date
1		02.05.2018

Sheet Title

A8

Job No.	Date	Scale
0006	02.20.2018	TBD

SECTIONS

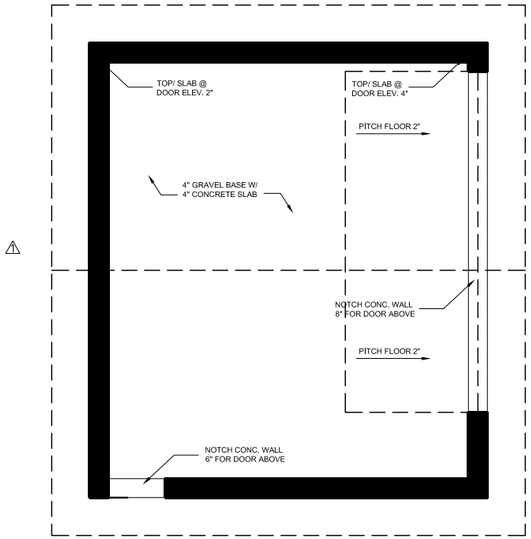

1 FOUNDATION PLAN

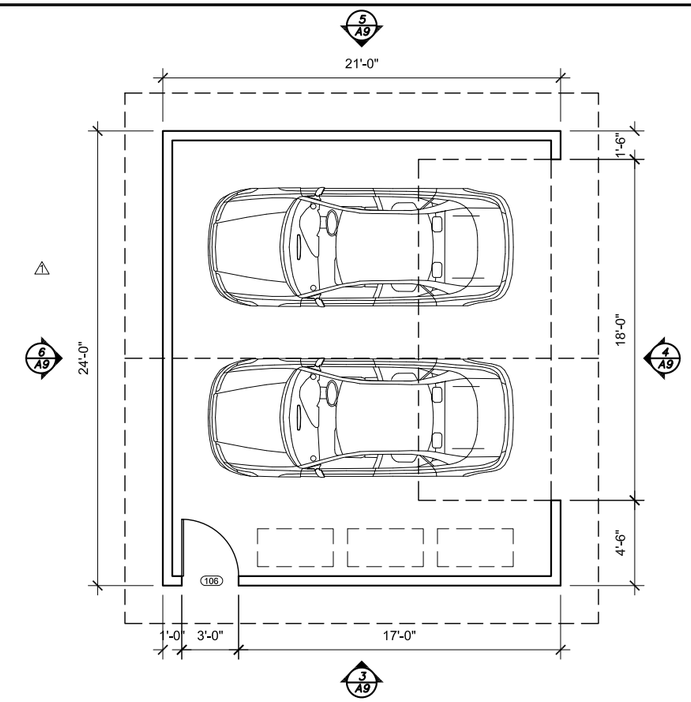

2 FLOOR PLAN

SCALE 1/8"=1'-0"

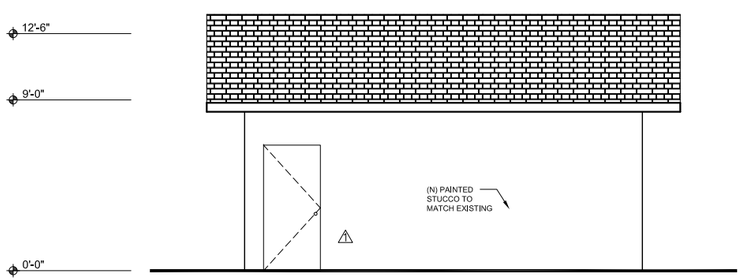

3 NEW GARAGE SOUTH ELEVATION

SCALE 1/8"=1'-0"

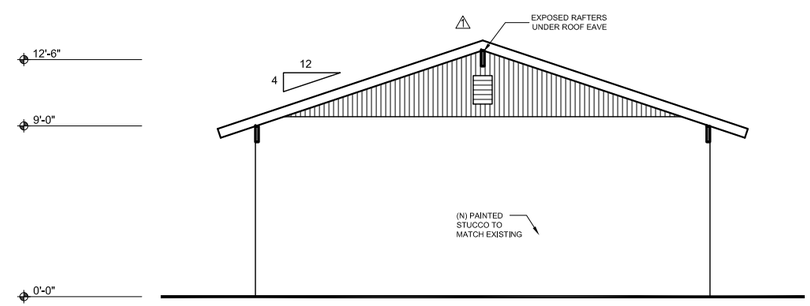

4 NEW GARAGE EAST ELEVATION

SCALE 1/8"=1'-0"

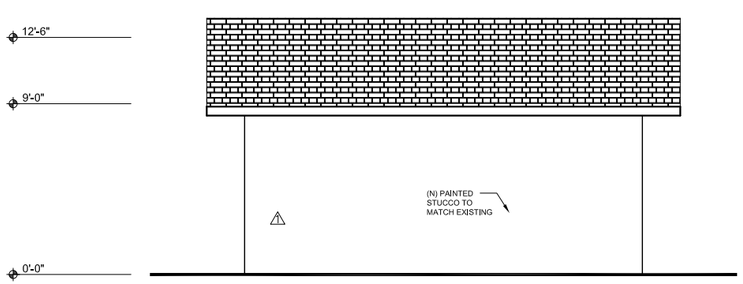

5 NEW GARAGE NORTH ELEVATION

SCALE 1/8"=1'-0"

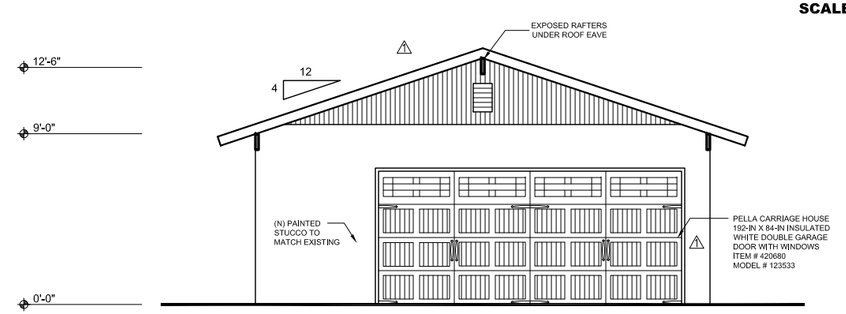

6 NEW GARAGE WEST ELEVATION

SCALE 1/8"=1'-0"

D.WorkShop - 74

3766 FOSTER AVE.
BALDWIN PARK, CA. 91706
tel. 626.712.1718

RESIDENTIAL ADDITION

THIS DRAWING IS AN INSTRUMENT OF SERVICE, IS THE PROPERTY OF THE DESIGNER AND MAY NOT BE REPRODUCED WITHOUT THE DESIGNERS PERMISSION AND UNLESS THE REPRODUCTION CARRIES THE DESIGNERS NAME. ALL DESIGN AND OTHER INFORMATION SHOWN ON THE DRAWING ARE FOR USE ON THE SPECIFIED PROJECT ONLY AND SHALL NOT BE USED OTHERWISE WITHOUT WRITTEN PERMISSION FROM THE DESIGNER

WISCONSIN RESIDENCE

1207 WISCONSIN ST.
POMONA, CA. 91768

Consultants

Approvals:

Key Plan:

NOTES:
MECHANICAL, ELECTRICAL, AND PLUMBING PERMITS TO BE PULLED SEPARATELY.

Submittals	Date
submittal 1	08.07.2017

No.	Revision	Date
1		02.05.2018

Sheet Title

A9

Job No.	Date	Scale
0006	02.20.2018	TBD

GARAGE

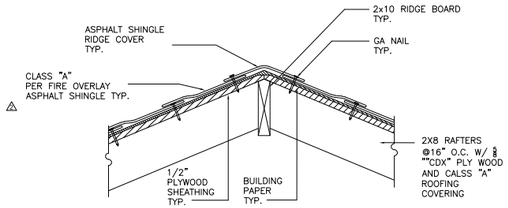

8 PURLIN DETAIL TYP.

NOT TO SCALE

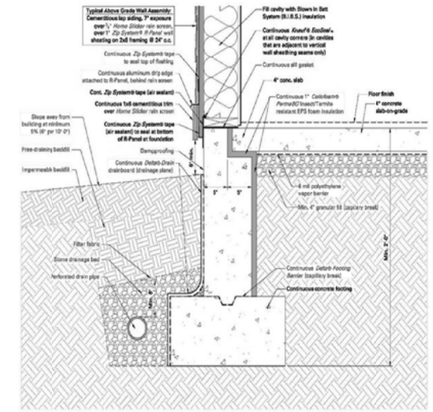

11 GARAGE DETAIL TYP.

NOT TO SCALE

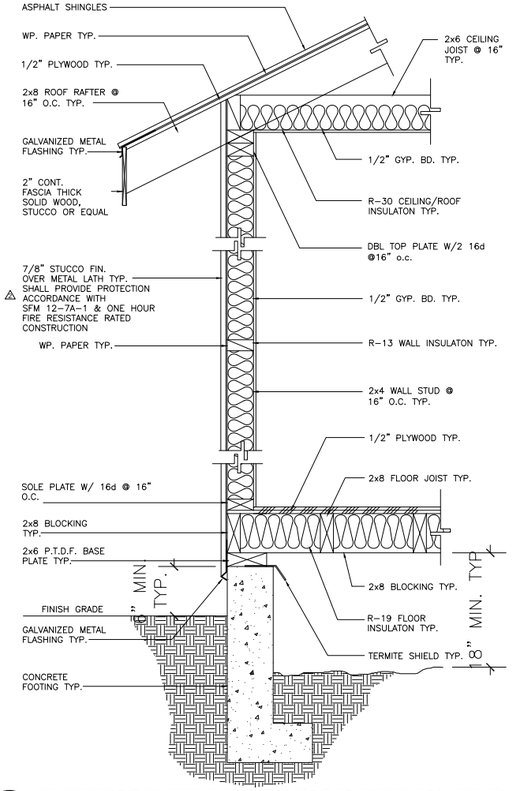

1 EXTERIOR WALL SECTION DETAIL TYP.

NOT TO SCALE

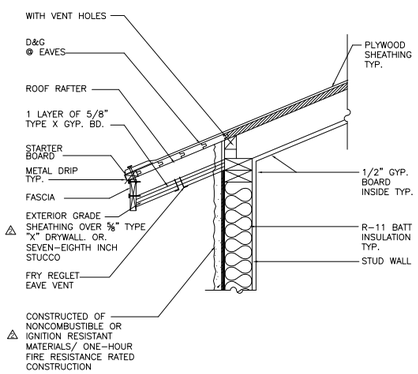

5 ROOF EAVE DETAIL TYP.

NOT TO SCALE

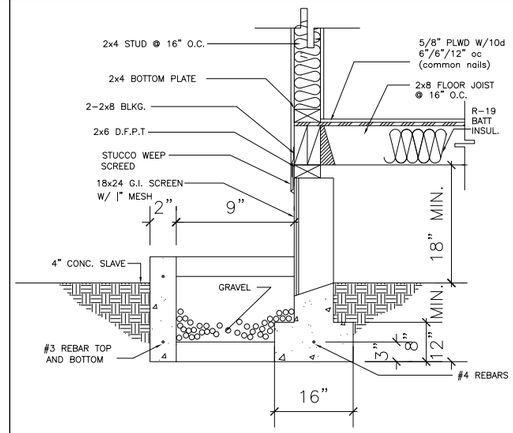

6 CRAWL SPACE ACCESS DETAIL

NOT TO SCALE

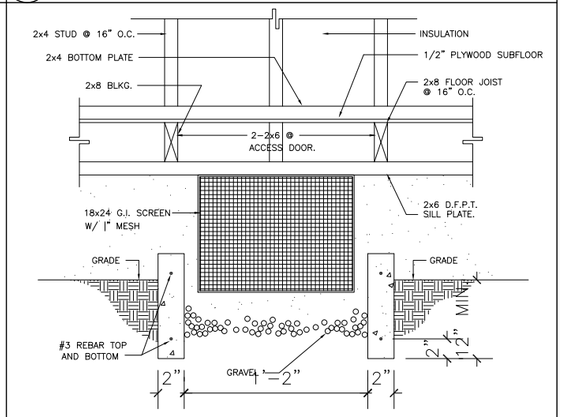

7 CRAWL SPACE ACCESS DETAIL

NOT TO SCALE

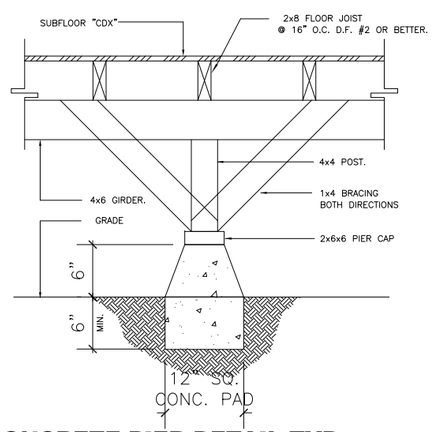

2 CONCRETE PIER DETAIL TYP.

NOT TO SCALE

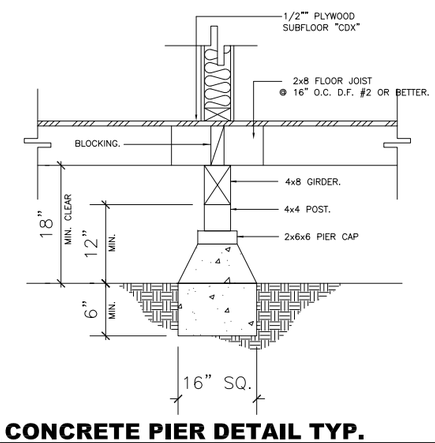

3 CONCRETE PIER DETAIL TYP.

NOT TO SCALE

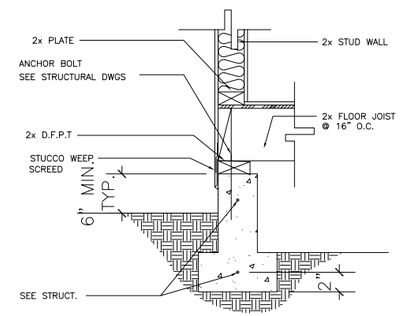

4 CONCRETE FOOTING DETAIL TYP.

NOT TO SCALE

D.WorkShop - 74

3766 FOSTER AVE.
BALDWIN PARK, CA. 91706
tel. 626.712.1718

RESIDENTIAL ADDITION

THIS DRAWING IS AN INSTRUMENT OF SERVICE, IS THE PROPERTY OF THE DESIGNER AND MAY NOT BE REPRODUCED WITHOUT THE DESIGNERS PERMISSION AND UNLESS THE REPRODUCTION CARRIES THE DESIGNERS NAME. ALL DESIGN AND OTHER INFORMATION SHOWN ON THE DRAWING ARE FOR USE ON THE INTENDED PROJECT ONLY AND SHALL NOT BE USED OTHERWISE WITHOUT WRITTEN PERMISSION FROM THE DESIGNER

WISCONSIN RESIDENCE

1207 WISCONSIN ST.
POMONA, CA. 91768

Consultants

Approvals:

Key Plan:

NOTES:

MECHANICAL, ELECTRICAL, AND PLUMBING PERMITS TO BE PULLED SEPARATELY.

Submittals	Date
submittal 1	08.07.2017

No.	Revision	Date
1		02.05.2018

Sheet Title

A10

Job No.	Date	Scale
0006	02.20.2018	TBD

DETAILS

GENERAL GRADING NOTES

1. ALL GRADING SLOPES SHALL BE PLANTED AND SPRINKLERED. SEC. 91.7012.1
2. NO FILL TO BE PLACED, UNTIL THE CITY GRADING INSPECTOR HAS INSPECTED AND APPROVED THE BOTTOM EXCAVATION.
3. MAN–MADE FILL SHALL BE COMPACTED TO A MINIMUM RELATIVE COMPACTION OF 90%. COHESIONLESS SOILS WITH LESS THAN 15% FINER THAN .005 MM REQUIRE 95% COMPACTION. SEC. 91.7011.3
4. TEMPORARY EROSION CONTROL TO BE INSTALLED BETWEEN NOVEMBER 1 AND APRIL 15." OBTAIN GRADING INSPECTOR'S AND DEPARTMENT OF PUBLIC WORKS APPROVAL OF PURPOSED PROCEDURES. [>200 CY] SEC. 91.7007.1
5. FINAL PLANS AND CALCULATIONS MUST BE SIGNED BY A REGISTERED CIVIL ENGINEER. SEC. 91.7006.1
6. THE FOLLOWING STATEMENT SIGNED BY BOTH THE SOILS ENGINEER AND GEOLOGIST, SHALL BE ON THE FINAL PLANS: "THIS PLAN HAS BEEN REVIEWED AND CONFORMS TO RECOMMENDATIONS OF SOILS ENGINEERING/GEOLOGIC REPORTS DATED _____ SIGNATURE AND DATE_____
7. PROVIDE CROSS–SECTIONS AT SLOPES SHOWING EXISTING GRADES, PROPOSED SLOPES, AREAS OF CUT OR FILL, RETAINING WALLS, STRUCTURES AND PROPERTY BOUNDARIES.
8. DETAIL ON PLANS THE METHOD OF TEMPORARY EXCAVATIONS. DIMENSION MAX VERTICAL CUTS AND SHOW TRIM SLOPE.
9. GRADED SLOPES ARE LIMITED TO A MAXIMUM SLOPE OF 2:1 [HORIZONTAL TO VERTICAL], UNLESS IT IS SPECIFICALLY ALLOWED IN AN APPROVED GEO/SOIL REPORT. SEC.91.7010.2/91.7011.2.

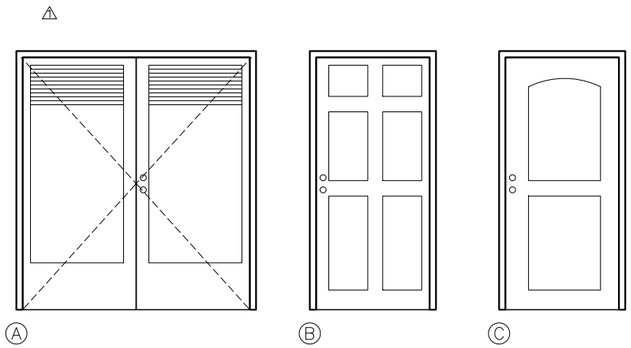

NOTE: CONTRACTOR TO PROVIDE:

1. PROVIDE "Z" BAR DRIP ON HEAD OF DOOR FRAME @ DOORS SHOP DRAWINGS FROM DOOR MANUFACTURES.

2. ALL EXTERIOR WOOD DOORS ARE SOLID CORE

3. ALL GLAZED DOORS, SHALL BE MULTI–LAYERED GLASS PANELS (DUAL OR TRIPLE–PANED WITH A MINIMUM OF ONE TEMPERED PANE)

4. EXTERIOR DOOR ASSEMBLIES SHALL MEET STANDARD SFM 12–7A–1 OR APPROVED FOR NONCOMBUSTIBLE CONSTRICTION.

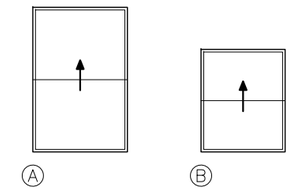

NOTE: CONTRACTOR TO PROVIDE:

1. SHOP DRAWINGS FROM WINDOW MANUFACTURES.
2. ALL GLASS SHALL BE MULTI–LAYERED (DUAL OR TRIPLE PANED WITH MINIMUM OF ONE TEMPERED PANE)
3. MATCH EXISTING WINDOWS AND WINDOW HEIGHTS
4. FRAME AND SASH ARE COMPRISED OF VINYL MATERIAL WITH WELDED CORNERS
5. FRAME AND SASH PROFILES ARE CERTIFIED IN AAMA LINEAL CERTIFICATION PROGRAM
6. CERTIFIED AND LABELED IN ACCORDANCE WITH ANSI/ AAMA/ NWWDA STRUCTURAL REQUIREMENTS

AAMA: ARCHITECTURAL MANUFACTURING ASSOCIATION
ANSI: AMERICAN NATIONAL STANDARDS INSTITUTE
NWWDA: NATIONAL WOOD WINDOW AND DOOR ASSOCIATION

DOOR SCHEDULE ⚠1

NUMBER	TYPE	DOOR SIZE WIDTH	X	HEIGHT	THK.	FINISH	CORE	FRAME	REMARKS
101	A	5'–0"	x	6'–8"	1¾"	FACTORY FINISH	HW	WD.	RELIABILT (ITEM#624697, MODEL #LOWOLJW182200135)
102	C	2'–6"	x	6'–8"	1¾"		HC	WD.	RELIABILT (ITEM#244591, MODEL #LOWOLJW137000285)
103	C	2'–6"	x	6'–8"	1¾"		HC	WD	RELIABILT (ITEM#244591, MODEL #LOWOLJW137000285)
104	B	2'–6"	x	6'–8"	1¾"		IC	ST	RELIABILT (ITEM#126052, MODEL #126052)
105	C	2'–6"	x	6'–8"	1¾"		HC	WD	RELIABILT (ITEM#244591, MODEL #LOWOLJW137000285)
106	B	3'–0"	x	6'–8"	1¾"		IC	ST	RELIABILT (ITEM#84116, MODEL #84116)

WINDOW SCHEDULE

NUMBER	TYPE	WINDOW SIZE WIDTH	X	HEIGHT	FINISH	AREA	DETAIL	REMARKS
101	A	2'–10"	x	4'–5"	FACTORY			MATCH EXISTING
102	A	2'–10"	x	4'–5"				MATCH EXISTING
103	A	2'–10"	x	4'–5"				MATCH EXISTING
104	A	2'–10"	x	4'–5"	FACTORY			MATCH EXISTING
105	C	3'–0"	x	3'–1"				MATCH EXISTING
106	A	2'–10"	x	4'–5"				MATCH EXISTING

D.WorkShop - 74

3766 FOSTER AVE.
BALDWIN PARK, CA. 91706
tel. 626.712.1718

RESIDENTIAL ADDITION

THIS DRAWING IS AN INSTRUMENT OF SERVICE, IS THE PROPERTY OF THE DESIGNER AND MAY NOT BE REPRODUCED WITHOUT THE DESIGNERS PERMISSION AND UNLESS THE REPRODUCTION CARRIES THE DESIGNERS NAME. ALL DESIGN AND OTHER INFORMATION SHOWN ON THE DRAWING ARE FOR USE ON THE INTENDED PROJECT ONLY AND SHALL NOT BE USED OTHERWISE WITHOUT WRITTEN PERMISSION FROM THE DESIGNER.

WISCONSIN RESIDENCE

1207 WISCONSIN ST.
POMONA, CA. 91768

Consultants

Approvals:

Key Plan:

NOTES:

MECHANICAL, ELECTRICAL, AND PLUMBING PERMITS TO BE PULLED SEPARATELY.

Submittals	Date
submittal 1	08.07.2017

No.	Revision	Date
⚠1		02.05.2018

Sheet Title

A11

Job No.	Date	Scale
0006	02.20.2018	TBD

SCHEDULE