1833 GAREY AVE

1833 N. GAREY AVE, POMONA, CA 91767

PLAN CHECK SUBMITTAL

THE ABOVE DRAWINGS AND SPECIFICATIONS AND REPRESENTATIONS THEREIN ARE AND SHALL REMAIN THE PROPERTY OF THE ARCHITECT AND NO PART THEREOF SHALL BE COPIED, DISCLOSED TO OTHERS OR USED IN CONNECTION WITH ANY OTHER WORK OR PROJECT OTHER THAN THE SPECIFIC PROJECT FOR WHICH THEY HAVE BEEN PREPARED AND DEVELOPED, WITHOUT THE WRITTEN CONSENT OF THE ARCHITECT. VISUAL CONTACT WITH THESE DRAWINGS AND SPECIFICATIONS SHALL CONSTITUTE CONCLUSIVE EVIDENCE OF ACCEPTANCE OF THESE RESTRICTIONS.

NO.	REVISIONS	DATE
01	PLAN CHECK REVISIONS	06/06/2016

LICENSED ARCHITECT
STEPHEN M. ALBERT
NO. C 9412
REN. 5-31-13
STATE OF CALIFORNIA

PROJECT DIRECTORY

OWNER

OWNER: MEL-POMONA, LLC
CONTACT: MOSHE LEVY, VP
EMAIL: contact@g2kconstruction.com
TEL: (818) 889-6046
ADDRESS: 28348 ROADSIDE DR, SUITE 205
AGOURA HILLS, CA 91301

ARCHITECT

COMPANY: THE ALBERT GROUP ARCHITECTS | ARCHITAG LLC
CONTACT: STEVE ALBERT
EMAIL: salbert@tagarch.net
TEL: (310) 820-8863
ADDRESS: 2032 STONER AVE. STUDIO A
LOS ANGELES, CA 90025

STRUCTURAL ENGINEER

COMPANY: PROGRESSIVE CONSULTANTS INC.
CONTACT: IJAZ SHEIKH
EMAIL: is@progressiveconsultants.net
TEL: PHONE: (818) 996-2250
ADDRESS: 19626 VENTURA BLVD., #204
TARZANA, CA 91356

MECHANICAL, ELECTRICAL & PLUMBING ENGINEER

COMPANY: SHAMIM ENGINEERING CONSULTANTS
CONTACT: MARK SHAMIM, PE
EMAIL: mark@shamimengineering.com
TEL: (818) 788-6778
ADDRESS: 5530 CORBIN AVE., SUITE 300
TARZANA, CA 91356

CIVIL ENGINEER

COMPANY: CALILAND ENGINEERING, INC.
CONTACT: KEVIN LAI
EMAIL: kevin@caliland.com
TEL: (626) 281-2288
ADDRESS: 1216 SOUTH GARFIELD AVE, SUITE 200
ALHAMBRA, CA 91801

LANDSCAPE ARCHITECT

COMPANY: YAEL LIIR LANDSCAPE ARCHITECTS
CONTACT: YAEL LIIR
EMAIL: yael@yaelliir.com
TEL: (323) 258-5222
ADDRESS: 1010 SYCAMORE AVE. SUITE 313
SOUTH PASADENA, CA 91030

SYMBOLS

SLOPE	SLOPE ARROWS	ROOM NAME / CEILING HGT. / FLR. MATERIAL	ROOM FINISH TAG
0:12	SLOPE ARROWS	SUSMP	SUSMP AREA ALLOCATION
T.O.WALL / T.O.WALL	ELEVATION CALLOUTS	+00.00'	POINT ELEVATION
X	GRID BUBBLE	00'-0"	STEP IN SLAB
1 / A0.0	BUILDING ELEVATION SHEET NUMBER	+0"	FACADE ELEVATION MARKER
0 / A0.0	INTERIOR ELEVATIONS SHEET NUMBER	A 0 0	WALL TYPE
1 / A0.0	BUILDING SECTION SHEET NUMBER	0	REVISION CALLOUT
1 / A0.0	WALL SECTION SHEET NEUMBER	D-000	DOOR CALLOUT
1 / A0.0	DETAIL NUMBER SHEET NUMBER	W-000	WINDOW CALLOUT
	DETAIL TICK	ROOM NAME / 000	ROOM NUMBER
	MATCHLINE	0'-0"	CEILING HEIGHT
	BREAK LINE		NORTH ARROW
0	KEYNOTES		

ABBREVIATIONS

A.F.F.	ABOVE FINISH FLOOR
A.F.S.	ABOVE FINISH SURFACE
BD.	BOARD
BLK.	BLOCK
BLKG.	BLOCKING
BM.	BEAM
BOT.	BOTTOM
BLDG.	BUILDING
BET.	BETWEEN
C.L.	CENTER LINE
C.B.	CATCH BASIN
CEM.	CEMENT
CER.	CERAMIC
C.I.P.	CAST IRON PIPE
CLG.	CEILING
CLO.	CLOSET
CLR.	CLEAR
C.O.	CLEAN OUT
COL.	COLUMN
COM.	COMMON
CONC.	CONCRETE
CONT.	CONTINUOUS
C.W.	COLD WATER
C.T.	CERAMIC TILE
C.YD.	CUBIC YARD
DET.	DETAIL
D.F.	DRINKING FOUNTAIN
D.D.	DOOR DIMENSION
DIA.	DIAMETER
DWG.	DRAWING
D.S.	DOWNSPOUT
D.W.	DISHWASHER
DR.	DOOR
DIM.	DIMENSION
EA.	EACH
ELEC.	ELECTRICAL
ELEV.	ELEVATION
ENCL.	ENCLOSURE
EXH.	EXHAUST
EXIST.	EXISTING
EXP.	EXPANSION
EXT.	EXTERIOR
E.J.	EXPANSION JOINT
F.D.	FLOOR DRAIN
F.E.C.	FIRE EXTINGUISHER CABINET
F.G.	FUEL GAS
F.H.C.	FIRE HOSE CABINET
FIN.	FINISH
FLR.	FLOOR
FLRG.	FLOORING
FTG.	FOOTING
F. GL.	FIXED GLASS
F.S.	FLOOR SINK
FLUOR.	FLUORESCENT
F.O.C.	FACE OF CONCRETE
F.O.M.	FACE OF MASONRY
F.O.S.	FACE OF STUD
F.O.F.	FACE OF FINISH
F.F.	FINISH FLOOR
F.J.	FLOOR JOIST

GA.	GAUGE
GALV.	GALVANIZED
G.I.	GALVANIZED IRON
GL.	GLASS
GR.	GRADE
GYP. BD.	GYPSUM BOARD
G.D.	GARBAGE DISPOSAL
H.B.	HOSE BIBB
HWD.	HARDWOOD
HGT.	HEIGHT
H.PT.	HIGH POINT
HDR.	HEADER
HTR.	HEATER
H.W.	HOT WATER
HORIZ.	HORIZONTAL
H.C.	HOLLOW CORE
I.D.	INSIDE DIAMETER
INT.	INTERIOR
INSUL.	INSULATION
INV.	INVERT
I.P.S.	IRON PIPE SIZE
I.I.C.	IMPACT INSULATION CLASS
LAV.	LAVATORY
LGTH	LENGTH
LKR.	LOCKER
MIN.	MINIMUM
MAS.	MASONRY
MAX.	MAXIMUM
MECH.	MECHANICAL
MEMB.	MEMBRANE
MTL.	METAL
M.H.	MANHOLE
MISC.	MISCELLANEOUS
M.O.	MASONRY OPENING
M.R.	MOISTURE RESISTANT
MFG.	MANUFACTURER
N.I.C.	NOT IN CONTRACT
NO.	NUMBER
NOM.	NOMINAL
N.T.S.	NOT TO SCALE
OBSC.	OBSCURE
O.C.	ON CENTER
O.D.	OUTSIDE DIAMETER
OFF.	OFFICE
OPG.	OPENING
OV.	OVEN
OVFL.	OVERFLOW
OPP.	OPPOSITE
PL.	PROPERTY LINE/PLATE
PART'N	PARTITION
PLAS.	PLASTER
PLYWD.	PLYWOOD
PR.	PAIR
P.L.	PLASTIC LAMINATE

R.	RISER
RAD.	RADIUS
REINF.	REINFORCING
RESIL.	RESILIENT
RD.	ROOF DRAIN
RM.	ROOM
R.O.	ROUGH OPENING
REF.	REFRIGERATOR
REQ'D.	REQUIRED
S.C.	SOLID CORE
SHT.	SHEET
SIM.	SIMILAR
SHTG.	SHEATHING
SQ.	SQUARE
STD.	STANDARD
STL.	STEEL
STRUCT.	STRUCTURAL
S.S.	STAINLESS STEEL
SUSP.	SUSPENDED
SPECS.	SPECIFICATIONS
STOR.	STORAGE
S.T.C.	SOUND TRANSMISSION CLASS
S.F.	SQUARE FOOT
SSD	SEE STRUCTURAL DRAWINGS
TEL.	TELEPHONE
TERR.	TERRAZZO
T & G	TONGUE AND GROOVE
T.O.C.	TOP OF CURB
T.O.W.	TOP OF WALL
TYP.	TYPICAL
THRU	THROUGH
TEMP.	TEMPERED
T.O.P.	TOP OF PARAPET
T.	TREAD
T.O.PL.	TOP OF PLATE
U.	URINAL
U.O.N.	UNLESS OTHERWISE NOTED
VERT.	VERTICAL
VEST.	VESTIBULE
V.C.T.	VINYL COMPOSITION TILE
VIF	VERIFY IN FIELD
W/	WITH
WAINS.	WAINSCOT
W.C.	WATER CLOSET
WD.	WOOD
WH.	WATER HEATER
WP.	WATERPROOF

SHEET INDEX

A0.00	TITLE SHEET
A0.01	GENERAL NOTES
A0.02	APPROVALS
A0.03	APPROVALS
A0.11	CODE COMPLIANCE
A0.12	CODE COMPLIANCE
A0.13	CODE COMPLIANCE

CIVIL

C.1	PRECISE GRADING PLAN GROUND FLOOR
C.2	PRECISE GRADING PLAN UNDERGROUND
C.3	ALLEY IMPROVEMENT PLAN
C.4	ALLY IMPROVEMENT PLAN

LANDSCAPING

L2	SECOND FLOOR PLANTING PLAN
L3	THIRD FLOOR PLANTING PLAN
L4	FIRST FLOOR IRRIGATION PLAN
L5	SECOND FLOOR IRRIGATION PLAN
L6	THIRD FLOOR IRRIGATION PLAN
L7	DETAILS

ARCHITECTURAL

A1.00	EXISTING CONDITIONS
A1.01	SITE PLAN
A1.02	SITE PLAN DETAILS
A2.00	UNDERGROUND PARKING PLAN
A2.01	GROUND FLOOR PLAN
A2.02	SECOND FLOOR PLAN
A2.03	THIRD FLOOR PLAN
A2.04	LOFT PLAN
A2.05	ROOF PLAN
A2.11	ENLARGED 1 BEDROOM UNITS
A2.12	ENLARGED 1 BEDROOM LOFTS
A2.13	ENLARGED 2 BEDROOM UNITS
A2.14	ENLARGED 2 BEDROOM UNITS
A2.15	ENLARGED 2 BEDROOM LOFTS
A2.16	ENLARGED 2 BEDROOM LOFTS
A2.17	ENLARGED 2 BEDROOM LOFTS
A2.18	ENLARGED 3 BEDROOM UNIT
A3.01	BUILDING ELEVATIONS
A3.02	BUILDING ELEVATIONS
A4.01	BUILDING SECTIONS
A4.02	BUILDING SECTIONS
A5.01	WALL SECTIONS
A6.01	ENLARGED STAIR PLANS AND SECTIONS
A6.02	ENLARGED STAIR PLANS AND SECTIONS
A6.03	ENLARGED STAIR & ELEVATOR PLANS AND SECTIONS
A7.01	DOOR, WINDOW & STOREFRONT SCHEDULES
ACC.1	ACCESIBILITY DETAILS
ACC.2	ACCESIBILITY DETAILS
AD.10	ARCHITECTURAL DETAILS - WALLS
AD.11	ARCHITECTURAL DETAILS - WALLS
AD.12	ARCHITECTURAL DETAILS - PARKLEX
AD.20	ARCHITECTURAL DETAILS - FOUNDATION
AD.30	ARCHITECTURAL DETAILS - ROOFING
AD.31	ARCHITECTURAL DETAILS - ROOFING
AD.40	ARCHITECTURAL DETAILS - WINDOWS
AD.41	ARCHITECTURAL DETAILS - WINDOWS
AD.50	ARCHITECTURAL DETAILS - DOORS
AD.51	ARCHITECTURAL DETAILS - DOORS
AD.60	ARCHITECTURAL DETAILS - SCREENS
AD.70	ARCHITECTURAL DETAILS - STAIRS & HANDRAILS
AD.71	ARCHITECTURAL DETAILS - STAIRS & HANDRAILS
AD.80	ARCHITECTURAL DETAILS - CABINETRY
AD.81	ARCHITECTURAL DETAILS - REVEAL, FINISHES
AD.90	ARCHITECTURAL DETAILS - SITE

STRUCTURAL

SS1	GENERAL NOTES
SS2	GENERAL NOTES
S-1	FOUNDATION PLAN
S-2	GROUND LEVEL SLAB PLAN
S-3	GROUND LEVEL N-S REBAR PLAN
S-4	GROUND LEVEL E-W REBAR PLAN
S-5	SECOND FLOOR SLAB PLAN
S-6	SECOND FLOOR N-S REBAR PLAN
S-7	SECOND FLOOR E-W REBAR PLAN
S-8	HOLDOWN PLAN
S-9	3RD FLOOR FRAMING PLAN
S-10	LOFT AND LOW ROOF FRAMING PLAN
S-11	HIGH ROOF FRAMING PLAN
SD-1	DETAILS
SD-2	DETAILS
SD-3	DETAILS
SD-4	DETAILS
SD-4A	BEAM ELEVATION DETAILS
SD-5	DETAILS
SD-6	DETAILS
SD-7	DETAILS
SD-8	DETAILS
SD-9	DETAILS

LIGHTING

LT1.01	UNDERGROUND, GROUND FLOOR, BUILDING & TYPICAL UNIT LIGHTING PLANS

MECHANICAL

M1.0	NOTES, SCHEDULES & LEGENDS
M1.1	NOTES, SCHEDULES & LEGENDS
M2.0	SUBTERRANEAN PARKING
M2.1	FIRST FLOOR
M2.2	SECOND FLOOR
M2.3	THIRD FLOOR
M2.4	LOFT
M2.5	ROOF PLAN
M3.0	ENLARGED UNITS
M3.1	ENLARGED UNITS
M3.2	ENLARGED UNITS
M3.3	ENLARGED UNITS
M4.0	DETAIL SHEET
M4.1	DETAIL SHEET

ELECTRICAL

E0.1	GENERAL NOTES, ABBREVIATIONS, SYMBOLS & SHEET INDEX
E0.2	ELECTRICAL SPECIFICATIONS
E0.3	SINGLE LINE DIAGRAMS & DETAILS
E0.4	LOAD CALCULATIONS & SUMMARY
E0.5a	PANEL SCHEDULES
E0.5b	PANEL SCHEDULES
E0.6	TITLE 24 LIGHTNING MANDATORY MEASURES, LIGHTNING FIXTURES SCHEDULE & DETAILS
E0.7	LIGHTNING MANDATORY MEASURES
E0.8	INDOOR TITLE 24 LIGHTNING COMPLIANCE
E0.10	DETAILS
E2.0	UNDERGROUND LEVEL PARKING PLAN - LIGHTING
E2.1	UPPER GARAGE & 1ST FLOOR PLAN - LIGHTING
E2.2	2ND FLOOR PLAN - LIGHTING
E2.3	3RD FLOOR PLAN - LIGHTING
E2.4	LOFTS & ROOF PLAN - LIGHTING
E3.0	LOWER LEVEL PARKING PLAN - POWER
E3.1	SITE PLAN & 1ST FLOOR PLAN - POWER
E3.2	SECOND FLOOR PLAN - POWER
E3.3	THIRD FLOOR PLAN - POWER
E3.4	FOURTH FLOOR PLAN - POWER
E4.1	ENLARGED TYPICAL UNIT PLAN
E4.2	ENLARGED TYPICAL UNIT PLAN
E4.3	ENLARGED TYPICAL UNIT PLAN
E4.4	ENLARGED TYPICAL UNIT PLAN
E4.5	ENLARGED TYPICAL UNIT PLAN
L1	FIRST FLOOR PLANTING PLAN

PLUMBING

P0.1	SCHEDULES, LEGEND & NOTES
P1.0	SITE PLAN
P2.0	UNDERGROUND PARKING PLAN
P3.0	GROUND FLOOR PLAN
P3.1	GROUND FLOOR PLAN
P4.0	SECOND FLOOR PLAN
P4.1	SECOND FLOOR PLAN
P5.0	THIRD FLOOR PLAN
P5.1	THIRD FLOOR PLAN
P6.0	LOFT PLAN
P7.0	ROOF PLAN
P8.0	ENLARGED 3 BEDROOM UNIT
P8.1	ENLARGED 1 BEDROOM UNITS
P8.2	ENLARGED 1 BEDROOM LOFTS
P8.3	ENLARGED 2 BEDROOM UNITS
P8.4	ENLARGED 2 BEDROOM UNITS
P8.5	ENLARGED 2 BEDROOM LOFTS
P8.6	ENLARGED 2 BEDROOM LOFTS
P8.7	ENLARGED 2 BEDROOM LOFTS
P9.0	RISER DIAGRAM
P9.1	RISER DIAGRAM
P9.2	RISER DIAGRAM
P9.3	RISER DIAGRAM
P9.4	RISER DIAGRAM
P9.5	RISER DIAGRAM
P9.6	RISER DIAGRAM
P9.7	RISER DIAGRAM
P9.8	RISER DIAGRAM
P9.9	RISER DIAGRAM
P9.10	RISER DIAGRAM
P9.11	RISER DIAGRAM
P9.12	RISER DIAGRAM
P9.13	RISER DIAGRAM
P9.14	RISER DIAGRAM
P10.0	PLUMBING DETAILS
P10.1	PLUMBING DETAILS

REFERENCE

SR.01	SOILS REPORT
SR.02	SOILS REPORT
SR.03	SOILS REPORT
SR.04	SOILS REPORT

PROJECT DATA

PROPERTY INFORMATION

SITE ADDRESS: 1833 NORTH GAREY AVENUE, POMONA, CA 91766

LEGAL DESCRIPTION: PARCEL 2 OF PARCEL MAP NO. 26558, IN THE CITY OF POMONA, COUNTY OF LOS ANGELES, STATE OF CALIFORNIA, AS PER MAP RECORDED IN BOOK 324, PAGES 21 AND 22 OF MAPS, IN THE OFFICE OF SAID COUNTY.

ASSESOR PARCEL NUMBERS: 8359-007-033

PROJECT DESCRIPTION

35 CONDOMINIUMS OVER 2 LEVELS OF PARKING AND APROXIMATELY 6,100 SF OF COMMERCIAL SPACE AT GRADE. AMMENITIES INCLUDE A COURTYARD, COMMUNITY ROOM AND ONSITE LAUNDRY FACILTIES.

CODE SUMMARY

APPLICABLE BUILDING CODE:
2013 CALIFORNIA BUILDING CODE
2013 CALIFORNIA ELECTRICAL CODE
2013 CALIFORNIA MECHANICAL CODE
2013 CALIFORNIA PLUMBING CODE
COMPREHENSIVE ZONING ORDINANCE OF THE CITY OF POMONA
POMONA CORRIDORS SPECIFIC PLAN

PROPOSED USE / OCCUPANCY TYPE:
RETAIL (M)
RESIDENTIAL UNITS (R-2)
PARKING & STORAGE (S-2)

PROPOSED CONSTRUCTION TYPE AND ALLOWABLE BUILDING HEIGHT AND AREA:
I-B + PARKING & 1ST LEVEL (2 TOTAL)
11 STORIES HEIGHT & 160' - UNLIMITED AREA
V-B + 2ND - 3RD LEVELS (2 TOTAL)
2 STORIES & 40' - 7,000 SF/STORY
FULLY SPRINKLERED (NFPA-13)

ALLOWABLE AREA CALCULATION

2013 CBC, SECTION 503

ALLOWABLE AREA CALCULATION
Aa = [At + [At x If] + [At x Is]]
Aa = ALLOWABLE BUILDING AREA PER STORY (SQUARE FEET)
At = TABULAR BUILDING AREA (SQUARE FEET) PER STORY IN ACCORDANCE WITH TABLE 503
If = AREA INCREASE FACTOR DUE TO FRONTAGE AS CALCULATED IN ACCORDANCE WITH SECTION 506.2
Is = AREA INCREASE FACTOR DUE TO SPRINKLER PROTECTION AS CALCULATED IN ACCORDANCE WITH SECTION 506.3. THE SPRINKLER AREA INCREASE FOR PROPOSED R-2 PROJECT IS 200% OR 2

FLOOR / LEVEL	CONSTRUCTION TYPE	ALLOWABLE AREA		
RESIDENTIAL / R-2 2ND - 3RD FLRS	TYPE V-B-FS	At = 7,000 SF	If = 0	Is = 2
		Aa = {7,000 + [7,000 x 2]}		
		Aa = {7,000 + [14,000]}		
		Aa = 21,000 SF PER STORY		
		PROPOSED AREA PER FLOOR: 2ND FLOOR: 19,051 SF 3RD FLOOR: 18,000 SF		
SUBTERRANEAN & 1ST FLR	TYPE I-B-FS	UNLIMITED		

ZONING DATA

ZONING INFORMATION:	POMONA CORRIDORS SPECIFIC PLAN
ZONING DESIGNATION/ SPECIFIC PLAN AREA:	(T4) WORKPLACE GATEWAY SEGMENT (PCSP 2.1.8)
MAX ALLOWABLE HEIGHT:	3 STORIES / 40' (PCSP 2.3.1.B.1.C.ii)
RETAIL STORY:	MIN 14' / MAX 16'
RESIDENTIAL STORY:	MAX 12'
MAX ALLOWABLE BLDG LENGTH:	300 FT
BUILDING MASSING PROPORTIONS (LENGTH:HEIGHT):	3L:2H TO 5L:2H ALONG GAREY AVE 2L:3H TO 5L:2H ALONG OTHER STREETS
BUILDING ORIENTATION TO STREETS & PUBLIC OPEN SPACE	REQUIRED
SETBACKS:	SECTION
FRONT YARD SETBACK:	12' MIN / 25' MAX
SIDEYARD SETBACKS W/LIVING SPACE WINDOWS:	10' MIN
SIDEYARD SETBACKS W/OUT LIVING SPACE WINDOW:	0'
REAR YARD SETBACK:	10' MIN
ALLEY SETBACK:	5' MIN

AT REQUIRED SETBACK AREAS, ARCADES, AWNINGS, ENTRANCE PORTICOS, PORCHES, STOOPS, STAIRS, BALCONIES, BAY WINDOWS, EAVES, COVERED AND ENTRANCE OVERHANGS, ARE PERMITTED TO ENCROACH UP TO SIX (6) FEET INTO THE REQUIRED FRONT YARD SETBACK. THESE OVERHANGS MUST PROVIDE A MINIMUM OF EIGHT (8) FEET CLEAR HEIGHT ABOVE SIDEWALK GRADE.

FRONTAGE COVERAGE:	50%
BUILD TO CORNER	REQUIRED
LOT AREA:	28,887 SF, SEE SURVEY
SPACE BTWN BUILINGS:	20'
PROPOSED BUILDING AREA (GROSS)	1ST FLOOR: 6,031 SF (N/I PARKING OR OUTDOOR AREAS) 2ND FLOOR: 22,235 SF (INCLUDES ENTIRE FLOOR PLATE) 3RD FLOOR: 18,794 SF (INCLUDES ENTIRE FLOOR PLATE) TOTAL: 47,077 SF

PROGRAM DATA

UNIT DATA

	1 BDRM	*2 BDRM*	*3 BDRM*	***SUBTOTAL***
2ND FLOOR	7	10	1	**18**
3RD FLOOR	6	10	1	**17**
TOTALS	13	20	2	**35**

SITE AREA = 28,887SF = 52.8 UNITS/ACRE

FLOOR AREA TABULATION

ALLOWABLE BUILDING AREA (508.4.2)

FLOOR LEVEL	TYPE I B	TYPE V B
PARKING LEVEL (S-2)	UNLIMITED	-
GROUND LEVEL (M)	UNLIMITED	-
2ND FLOOR (R-2)	-	21,000
3RD FLOOR (R-2)	-	21,000
TOTAL		**42,000 SF**

PROPOSED BUILDING AREA

FLOOR LEVEL	TYPE I B	TYPE V B
PARKING LEVEL (S-2)	20,383 SF	-
GROUND LEVEL (M)	22,499 SF	-
2ND FLOOR (R-2)	-	19,051 SF
3RD FLOOR (R-2)	-	18,000 SF
SUBTOTAL	**24,882 SF**	**37,051 SF**
	TOTAL	**61,933 SF**

MAXIMUM AREA OF BUILDING (506.5.2)

61,933 SF / 21,000 SF < 3
2.95 < 3

OPEN SPACE REQUIREMENTS

PROVISION OF PUBLIC OPEN SPACE:

RESIDENTIAL	150 SF/UNIT
RETAIL	50 SF/1000 SF*

PROVISION OF PRIVATE OPEN SPACE:

RESIDENTIAL: ATTACHED & MULTI-FAMILY	60 SF/UNIT

SETBACK AREA LANDSCAPING TYPES:

BOULEVARD LANDSCAPING	REQUIRED

INTERIOR BLOCK SETBACK AREAS:

GROUNDCOVER:	REQUIRED
MODERATE OR HEAVY SCREENING	REQUIRED

*RETAIL PUBLIC SPACE IS ONLY FOR DEVELOPMENT OVER 20,000 SF OF RETAIL BUILDING AREA

PUBLIC OPEN SPACE REQUIRED

UNIT TYPE	REQ'D SF	PROPOSED UNITS	SUBTOTAL REQUIRED
RETAIL*	-		
RESIDENTIAL	150SF/UNIT	35 UNITS	5,250 SF
TOTAL PUBLIC OPEN SPACE REQUIRED			**5,250 SF**

*RETAIL PUBLIC SPACE IS ONLY FOR DEVELOPMENT OVER 20,000 SF OF RETAIL BUILDING AREA

PRIVATE OPEN SPACE REQUIRED

UNIT TYPE	REQ'D SF	PROPOSED UNITS	SUBTOTAL REQUIRED
RESIDENTIAL	60SF/UNIT	35 UNITS	2,100SF
TOTAL PRIVATE OPEN SPACE REQUIRED			**2,100 SF**

OPEN SPACE PROVIDED

FLOOR LEVEL	SUBTOTAL PUBLIC	SUBTOTAL PRIVATE
FIRST FLOOR	6,922 SF	-
SECOND FLOOR	-	1,952 SF
THIRD FLOOR	-	1,690 SF
TOTAL PRIVATE OPEN SPACE PROVIDED		**3,642 SF**
TOTAL PUBLIC OPEN SPACE PROVIDED	**6,922 SF**	

UNIT MATRIX

Apartment	Type	Area
205	1 BEDROOM	589 SF
206 *	1 BEDROOM	602 SF
211 *	1 BEDROOM	636 SF
212	1 BEDROOM	632 SF
214 *	1 BEDROOM	622 SF
215 *	1 BEDROOM	638 SF
217 *	1 BEDROOM	603 SF
302	1 BEDROOM	246 SF
304	1 BEDROOM	214 SF
305	1 BEDROOM	785 SF
306 *	1 BEDROOM	602 SF
307	1 BEDROOM	296 SF
308	1 BEDROOM	269 SF
310	1 BEDROOM	438 SF
311	1 BEDROOM	616 SF
312	1 BEDROOM	160 SF
313	1 BEDROOM	163 SF
314	1 BEDROOM	873 SF
315 *	1 BEDROOM	637 SF
		9622 SF

AVERAGE 1 BEDROOM SIZE 726 SF

Apartment	Type	Area
201	2 BEDROOM	890 SF
202	2 BEDROOM	839 SF
203	2 BEDROOM	990 SF
204	2 BEDROOM	887 SF
207	2 BEDROOM	903 SF
208	2 BEDROOM	902 SF
209	2 BEDROOM	902 SF
210	2 BEDROOM	875 SF
213	2 BEDROOM	855 SF
216	2 BEDROOM	871 SF
301	2 BEDROOM	1295 SF
302	2 BEDROOM	848 SF
303	2 BEDROOM	992 SF
304	2 BEDROOM	889 SF
307	2 BEDROOM	917 SF
309	2 BEDROOM	901 SF
312	2 BEDROOM	617 SF
313	2 BEDROOM	860 SF
316	2 BEDROOM	870 SF
		17103 SF

AVERAGE 2 BEDROOM SIZE 932 SF

Apartment	Type	Area
218	3 BEDROOM	1321 SF
308	3 BEDROOM	905 SF
310	3 BEDROOM	881 SF
317	3 BEDROOM	1440 SF
		4547 SF

AVERAGE 3 BEDROOM SIZE 1402 SF

** ADA COMPLIANT UNIT*

COMMERCIAL AREA

COMMERCIAL 1	1507 SF
COMMERCIAL 2	1363 SF
COMMERCIAL 3	890 SF
COMMERCIAL 4	1084 SF
COMMERCIAL 5	1169 SF
TOTAL:	6012 SF

PARKING TABULATION

PARKING REQUIRED

1 BEDROOM UNITS	13 x 1.5 PER UNIT	20 SPACES
2 BEDROOM UNITS	18 x 2 PER UNIT	36 SPACES
3 BEDROOM UNITS	4 x 2.5 PER UNIT	10 SPACES
GUEST SPACES	35 UNITS X 1.5 PER 10 UNITS*	06 SPACES
TOTAL RESIDENTIAL PARKING		**72 SPACES**
BUSINESS AND PERSONAL SERVICES	6,031 SF / 1000 X 2.5*	16 SPACES MIN
PARKING REDUCTION	-1 SPACE / 200 SF OF ADDITIONAL PUBLIC OPEN SPACE**	**-8 SPACES**
TOTAL VEHICULAR PARKING REQUIRED	***80 SPACES MIN 60 STD 25% CMP MAX (20 SPACES)***	
ADA PARKING: 1 PER 20 STALLS		80 SPACES = 4 REQ'D

PARKING REQUIREMENT PER POMONA CORRIDORS SPECIFIC PLAN
* SHARED PARKING REDUCTION PER PSCP 2.7.1.C
** PUBLIC OPEN SPACE PARKING REDUCTION PER PSCP 2.7.1.C.4
REQUIRED PUBLIC OPEN SPACE= 5,250 SF
PROVIDED PUBLIC OPEN SPACE= 6,988 SF
ADDITIONAL PUBLIC OPEN SPACE = 1,738 SF

PARKING PROVIDED

PARKING GROUND LEVEL - VEHICULAR	27 TOTAL SPACES	21 STD (04 ADA), 6 CMP
PARKING UNDERGROUND - VEHICULAR	60 TOTAL SPACE	46 STD (0 ADA), 14 CMP
TOTAL VEHICULAR PARKING PROVIDED	***87 TOTAL SPACES***	***67 STD*** (04 ADA), ***20 CMP***

LOCATION MAP

POMONA CSP MAP

1833 N. GAREY AVE.

1833 NORTH GAREY AVENUE
PAMONA, CALIFORNIA 91767

TITLE SHEET

the albert group architects
2032 Stoner Ave | Los Angeles, CA 90025 310.820.8863

C.U.P. NUMBER:

PROJECT NUMBER: **14130**

PROJECT STATUS: **PLAN CHECK RESUBMITTAL**

ISSUE DATE: **07/18/2016**

SHEET NUMBER: **A0.00**

GENERAL NOTES

1. THE CONSTRUCTION SHALL NOT RESTRICT A FIVE-FOOT CLEAR AND UNOBSTRUCTED ACCESS TO ANY WATER OR POWER DISTRIBUTION FACILITIES (POWER POLES, PULL-BOXES, TRANSFORMERS, VAULTS, PUMPS, VALVES, METERS, APPURTENANCES, ETC.), OR TO THE LOCATION OF THE HOOK-UP. THE CONSTRUCTION SHALL NOT BE WITHIN TEN FEET OF ANY POWER LINES, WHETHER OR NOT THE LINES ARE LOCATED ON THE PROPERTY. FAILURE TO COMPLY MAY CAUSE CONSTRUCTION DELAYS AND/OR ADDITIONAL EXPENSES.
2. AN APPROVED SEISMIC GAS SHUTOFF VALVE WILL BE INSTALLED ON THE FUEL GAS LINE ON THE DOWN STREAM SIDE OF THE UTILITY METER AND BE RIGIDLY CONNECTED TO THE EXTERIOR OF THE BUILDING OR STRUCTURE CONTAINING THE FUEL GAS PIPING (PER ORDINANCE 170,158). INCLUDES COMMERCIAL ADDITIONS AND TI WORK OVER $10,000. SEPERATE PLUMBING PERMIT IS REQUIRED.
3. FIRE RATED ASSEMBLIES SHALL BE PER TABLE 720, GENERIC ASSEMBLIES OF GYPSUM HANDBOOK, HAVE LARR APPROVAL OR ICC APPROVAL.
4. OPENING PROTECTIVES SHALL BE PER TABLES 715.4 AND 715.5 AND AS SHOWN ON THE THE. DOOR AND WINDOW SCHEDULES ON SHEET A7.1. (715)
5. THIS BUILDING AND GARAGE MUST BE EQUIPPED WITH AN AUTOMATIC FIRE EXTINGUISHING SYSTEM, COMPLYING WITH NFPA-13 / NFPA-13R. THE SPRINKLER SYSTEM SHALL BE APPROVED BY THE PLUMBING DIVISION PRIOR TO INSTALLATION.
6. PROVIDE ULTRA LOW FLUSH WATER CLOSETS FOR ALL NEW CONSTRUCTION. EXISTING SHOWER HEADS AND TOILETS MUST BE ADAPTED FOR LOW WATER CONSUMPTION.
7. SHOWER COMPARTMENTS AND WALLS ABOVE BATHTUBS WITH INSTALLED SHOWER HEADS SHALL BE FINISHED WITH A SMOOTH, NONABSORBENT SURFACE TO HEIGHT NOT LESS THAN 70 INCHES ABOVE THE DRAIN INLET. SECTION 1210.3 USE OF WATER-RESISTANT GYPSUM BACKING BOARD SHALL BE AS STATED IN SECTION 2509.3
8. WATER HEATERS MUST BE STRAPPED TO A WALL (SEC. 507.3, UPC)
9. A COPY OF THE EVALUATION REPORT AND/OR CONDITIONS OF LISTING SHALL BE MADE AVAILABLE AT THE JOB SITE.
10. INTERIOR FINISH MATERIALS APPLIED TO WALL AND CEILINGS SHALL BE TESTED AS SPECIFIED IN SECTION 803 AND APPLICATION SHALL BE IN ACCORDANCE WITH SECTIONS 803, 804 AND TABLE 803.9.
11. EVERY SPACE INTENDED FOR HUMAN OCCUPANCY SHALL BE PROVIDED WITH NATURAL LIGHT BY MEANS OF EXTERIOR GLAZED OPENINGS IN ACCORDANCE WITH SECTION 1205.2 OR SHALL BE PROVIDED WITH ARTIFICIAL LIGHT THAT IS ADEQUATE TO PROVIDE AN AVERAGE ILLUMINATION OF 10 FOOR-CANDLES OVER THE AREA OF THE ROOM AT A HEIGHT OF 30 INCHES ABOVE THE FLOOR LEVEL. (1205.1 AND 1205.3)
12. DOUBLE STRIPING OF [VEHICULAR PARKING] STALLS SHALL BE PER ZONING CODE SECTION 12.21.C5 (e), (f) & (g)
13. WASTE AND LINEN COLLECTION ROOMS OVER 100 SQUARE FEET SHALL PROVIDE 1 HOUR SEPARATION OR PROVIDE AUTOMATIC FIRE-EXTINGUISHING SYSTEM OR CLASSIFY ROOM WITH OCCUPANCY COMPLY WITH SEPARATION PER TABLE 509
14. ALL STAIRWAYS SHALL BE BUILT OF MATERIAL CONSISTENT WITH THE TYPES PERMITTED FOR THE TYPE OF CONSTRUCTION OF THE BUILDING, EXCEPT THAT WOOD HANDRAILS SHALL BE PERMITTED FOR ALL TYPES OF CONSTRUCTION. (1009.9)
15. THRESHOLDS AT DOORWAYS SHALL NOT EXCEED 0.50" IN HEIGHT, 0.75" IN HEIGHT FOR SLIDING DOORS SERVING DWELLING UNITS. (1008.1.7)
16. FOR GLASS HANDRAILS AND GUARDS, THE PANELS AND THEIR SUPPORT SYSTEM SHALL BE DESIGNED TO WITHSTAND THE LOADS SPECIFIED IN CHAPTER 16, A SAFETY FACTOR OF FOUR SHALL BE USED. THE MINIMUM NOMINAL THICKNESS OF THE GLASS SHALL BE 1/4 INCH. (2407)
17. EXIT SIGNS SHALL BE ILLUMINATED AT ALL TIMES.
18. PROVIDE STAIRWAY ILLUMINATION. MIN. 1 FOOT-CANDLE AT TREAD RUNS. (1205.4)
19. ONE ELEVATOR IN BUILDINGS FOUR OR MORE STORIES ABOVE OR BELOW GRADE PLANE SHALL BE OF SUCH A SIZE TO ACCOMMODATE A 24-INCH BY 84-INCH AMBULANCE STRETCHER IN THE HORIZONTAL, OPEN POSITION AND SHALL BE IDENTIFIED BY THE INTERNATIONAL SYMBOL FOR EMERGENCY MEDICAL SERVICES. SEE 3002.4A FOR EXCEPTIONS. 91.3002.4
20. EVERY SPACE INTENDED FOR HUMAN OCCUPANCY SHALL BE PROVIDED WITH NATURAL LIGHT BY MEANS OF EXTERIOR GLAZED OPENINGS IN ACCORDANCE WITH SECTION 1205.2 OR SHALL BE PROVIDED WITH ARTIFICIAL LIGHT THAT IS ADEQUATE TO PROVIDE AN AVERAGE ILLUMINATION OF 10 FOOT-CANDLES OVER THE AREA OF THE ROOM AT A HEIGHT OF 30 INCHES ABOVE THE FLOOR LEVEL. (1205.1 AND 1205.3)
21. A FIRE RETARDANT ROOF COVERING IS REQUIRED. PROVIDE A COMPLETE DESCRIPTION ON PLANS. CLASS A ROOF COVERING IS REQUIRED FOR ALL BUILDINGS LOCATED IN A VERY HIGH FIRE HAZARD SEVERITY ZONE. (1505.1, 7207.4)
22. SHOW ROOF SLOPE(S), DRAIN(S) AND OVERFLOW DRAIN(S) OR SCUPPERS ON THE ROOF PLAN. PROVIDE A DETAIL OF THE ROOF DRAIN AND OVERFLOW SYSTEM.
    A. SIZE THE ROOF DRAINS AND OVERFLOW DRAINS ACCORDING TO CHAPTER 11 OF THE LAPC. (1503.4)
    B. THE ROOF DRAIN AND OVERFLOW DRAIN MUST BE INDEPENDENT LINES TO A YARD BOX.
    C. ROOF DRAINAGE IS NOT PERMITTED TO FLOW OVER PUBLIC PROPERTY. (3201.4)
    D. OVERFLOW SCUPPERS SHALL BE DESIGNED IN ACCORDANCE TO TABLE 11-1 OF THE LAPC
    E. SHOW ROOF ELEVATION TO PROVIDE A MINIMUM 1/4IN PER FOOT ROOF SLOPE FOR DRAINAGE OR DESIGN TO SUPPORT ACCUMULATED WATER.
    F. SITE DRAINAGE: SHOW ON PLANS HOW CONCENTRATED DRAINAGE IS BEING CONVEYES TO THE STREET VIA NON-EROSIVE DEVICES (7013.10)
23. PROVIDE ANTI-GRAFFITI FINISH AT THE FIRST 9 FEET, MEASURED FROM GRADE, AT EXTERIOR WALLS AND DOORS. (6306)
24. DETAILS OF THE GUARDRAILS AT THE FLOOR AND ROOF OPENINGS, OCCUPID ROOFS AND BALCONIES OR PORCHES MORE THAN 30" ABOVE GRADE ARE REQUIRED. GUARDRAILS SHALL BE 42" IN HEIGHT, HAVE INTERMEDIATE RAILS OR BALUSTERS SPACED AT 4" MAXIMUM. IT SHALL BE DESIGNED PER SECTION 1607.8 (1013.2)
25. EACH PANE OF SAFETY GLAZING INSTALLED IN HAZARDOUS LOCATIONS SHALL BE IDENTIFIED BY A MANUFACTURE'S DESIGNATION SPECIFYING WHO APPLIED THE DESIGNATION, THE MANUFACTURER OR INSTALLER AND THE SAFETY GLAZING STANDARD. THE FOLLOWING SHALL BE CONSIDERED SPECIFIC HAZARDOUS LOCATIONS FOR THE PURPOSED OF SAFETY GLAZING. GLAZING IN: SECTION 2406
    A. SWING DOORS.
    B. FIXED AND SLIDING PANELS OF SLIDING DOOR ASSEMBLIES AND PANELS IN SLIDING AND BI-FOLD CLOSET DOOR ASSEMBLIES.
    C. STORM DOORS.
    D. UNFRAMED SWINGING DOORS.
    E. DOORS AND ENCLOSURES FOR HOT TUBS, WHIRLPOOLS, SAUNAS, STEAM ROOMS, BATHTUBS, AND SHOWERS.
    F. FIXED OR OPERABLE PANELS ADJACENT TO A DOOR WHERE THE NEAREST EXPOSED EDGE OF THE GLAZING IS WITHIN 24 INCHES(610 MM) ARC OF EITHER VERTICAL EDGE OF THE DOOR IN A CLOSED POSITION AND WHERE THE BOTTOM EXPOSED EDGE OF THE GLAZING IS LESS THAN 60 INCHES(1525 MM) ABOVE THE WALKING SURFACE. READ CODE FOR EXCEPTIONS.
    G. FIXED OR OPERABLE PANEL, OTHER THAN DESCRIBED IN TERMS E AND F, WHICH MEETS ALL OF THE FOLLOWING CONDITIONS (READ CODE FOR EXCEPTION WITH SPECIAL INSTALLATION).
        I. EXPOSED AREA OF AN INDIVIDUAL PANE GREATER THAN 9 SQUARE FEET (0.84M²)
        II. EXPOSED BOTTOM EDGE LESS THAN 18 INCHES (457 MM) ABOVE THE FLOOR.
        III. EXPOSED TOP EDGE GREATER THAN 36 INCHES (914 MM) ABOVE THE FLOOR.
        IV. ONE OR MORE WALKING SURFACES WITHIN 36 INCHES (914 MM) HORIZONTALLY OF THE PLANE OF THE GLAZING.
    H. GUARDS AND RAILINGS REGARDLESS OF AREA OR HEIGHT ABOVE A WALKING SURFACE. INCLUDED ARE STRUCTURAL BALUSTER PANELS AND NONSTRUCTURAL IN-FILL PANELS.
    I. WALLS AND FENCES ENCLOSING INDOOR AND OUTDOOR SWIMMING POOLS AND SPAS WHERE ALL OF THE FOLLOWING CONDITIONS ARE PRESENT:
        I. THE BOTTOM EDGE OF THE GLAZING IS LESS THAN 60 INCHES (1525 MM) ABOVE A WALKING SURFACE ON THE POOL OR SPA SIDE OF GLAZING.
        II. THE GLAZING IS WITHIN 60 INCHES (1525 MM) OF A SWIMMING POOL OR SPA WATER'S EDGE.
    J. ADJACENT TO STAIRWAYS, LANDINGS AND RAMPS WITHIN 36 INCHES HORIZONTALLY OF A WALKING SURFACE; WHEN THE EXPOSED SURFACE OF THE GLASS IS LESS THAN 60 INCHES ABOVE THE PLANE OF THE ADJACENT WALKING SURFACE (READ CODE FOR EXCEPTION WITH SPECIAL INSTALLATION).
    K. ADJACENT TO STAIRWAYS WITHIN 60 INCHES HORIZONTALLY OF THE BOTTOM TREAD OF A STAIRWAYS IN ANY DIRECTION WHEN THE EXPOSED SURFACE OF THE GLASS IS LESS THAN 60 INCHES ABOVE THE NOSE OF THE TREAD (READ CODE FOR EXCEPTION WITH SPECIAL INSTALLATION).
26. PROVIDE A SWEEP SCREED FOR STUCCO AT THE FOUNDATION PLATE LINE A MINIMUM OF 4 INCHES ABOVE THE EARTH OR 2 INCHES ABOVE PAVED AREAS. WEEP SCREEDS SHALL BE OF A TYPE WHICH WILL ALLOW TRAPPED WATER TO DRAIN TO EXTERIOR OF THE BUILDING. (SHOW THESE DIMENSIONS ON A FOUNDATION DETAIL DRAWING). (SECTION 2512.1.2)
27. THIS BUILDING SHALL BE PROVIDED WITH A MANUAL ALARM SYSTEM WITH THE CAPABILITY TO SUPPORT VISIBLE ALARM NOTIFICATION APPLIANCES IN ACCORDANCE WITH NFPA 72. (907.2.9, 907.5.2.3.3, 907.5.2.3.4)
28. PENETRATIONS IN A FIRE-RATED WALL SHALL BE PROTECTED BY AN APPROVED FIRE STOP MATERIAL IN ACCORDANCE WITH SECTION 714.3.1.
    A. STEEL, COPPER OR FERROUS PIPES OR CONDUITS MAY PENETRATE CONCRETE OR MASONRY WALLS WHERE THE PENETRATING ITEM IS MAXIMUM 6-INCH DIAMATER AND THE AREA OF THE OPENING THROUGH THE WALL DOES NOT EXCEED 144 SQUARE INCHES.
    B. MEMBRANE PENETRATIONS OF MAXIMUM 2-HR FIRE-RESISTANCE RATED WALL AND PARTITIONS BY STEEL ELECTRICAL OUTLET BOXES NOT EXCEEDING 16 SQUARE INCHES ARE PERMITTED PROVIDED OPENINGS DO NOT EXCEED 100 SQUARE INCHES FOR ANY 100 SQUARE FEET OF WALL AREA. OUTLET BOXES ON OPPOSITE SIDES OF WALLS OR PARTITIONS MUST BE SEPARATED BY A HORIZONTAL DISTANCE OF 24 INCHES. (714.3.2)
    C. WHERE WALLS ARE PENETRATED BY OTHER MATERIALS OR WHERE LARGER OPENINGS ARE REQUIRED THAN PERMITTED IN (B) ABOVE, THEY MUST BE QUALIFIED BY TESTS CONDUCTED IN ACCORDANCE WITH SECTION (714.3.11)
29. SMOKE AND FIRE DAMPERS MUST BE INSTALLED IN THE FOLLOWING LOCATIONS PER SECTIONS 717.3
    A. DUCT PENETRATIONS OF FIRE WALLS IN ACCORDANCE WITH SECTION (717.11)
    B. DUCT PENETRATIONS OF FIRE BARRIERS, EXCEPT EXIT ENCLOSURES AND EXIT PASSAGEWAYS WHERE THEY ARE NOT ALLOWED TO PENETRATE. (717.5.2)
    C. DUCTS PENETRATING SHAFTS. (717.5.3)
    D. DUCTS PENETRATING FIRE PARTITIONS AND FIRE-RATED CORRIDOR WALLS. SEE EXCEPTION FOR STEEL DUCTS WITH NO OPENINGS INTO CORRIDOR. (717.5.4.1)
    E. DUCTS PENETRATING SMOKE BARRIERS. (717.5.5)
    F. DUCTS PENETRATING HORIZONTAL ASSEMBLIES. (717.6)
30. UNIT SKYLIGHTS SHALL BE LABELED BY A LA CITY APPROVED LABELING AGENCY. SUCH LABEL SHALL STATE THE APPROVED LABELING AGENCY NAME, PRODUCT DESIGNATION AND PERFORMANCE GRADE RATING (RESEARCH REPORT NOT REQUIRED). 2405.5
31. THE FLAME-SPREAD RATING OF PANELING MATERIALS ON THE WALLS OF THE CORRIDOR, LOBBY AND EXIT ENCLOSURE SHALL BE AS FOLLOWS: MUST BE IDENTIFIED ON PLANS. (T-803.9)

GROUP	INTERIOR EXIT STAIRWAYS, INTERIOR EXIT RAMPS AND EXIT PASSAGEWAYS	CORRIDOR AND ENCLOSURE FOR EXIT ACCESS STAIRWAYS AND EXIT ACCESS RAMPS	ROOMS AND ENCLOSED SPACES
B	B	C	C
R-2	C	C	C

SECURITY REQUIREMENTS

1. ALL ENTRY DOORS TO DWELLING UNITS OR GUEST ROOMS SHALL BE ARRANGED SO THAT THE OCCUPANT HAS A VIEW OF THE AREA IMMEDIATELY OUTSIDE THE DOOR WITHOUT OPENING THE DOOR. SUCH VIEW MAY BE PROVIDED BY A DOOR VIEWER, THROUGH WINDOWS LOCATED IN THE VICINITY OF THE DOOR OR THROUGH VIEW PORTS IN THE DOOR OR ADJOINING WALL.
2. SCREENS, BARRICADES, OR FENCES MADE OF A MATERIAL WHICH WOULD PRECLUDE HUMAN CLIMBING SHALL BE PROVIDED AT EVERY POTION OF EVERY ROOF, BALCONY, OR SIMILAR SURFACE WHICH IS WITHIN 8 FT. OF THE UTILITY POLE OR SIMILAR STRUCTURE.
3. WOOD FLUSH-TYPE DOORS SHALL BE 1-3/8" THICK MINIMUM WITH SOLID CORE CONSTRUCTION. 91.9709.1 - DOOR STOPS IN SWINGING DOORS SHALL BE OF ONE PIECE CONSTRUCTION WITH THE JAMB OR JOINED BY RABBET TO THE JAMB.
4. EVERY DOOR IN A SECURITY OPENING FOR AN APARTMENT HOUSE SHALL BE PROVIDED WITH A LIGHT BULB (60 WATT MIN.) AT A MAXIMUM OF 8 FEET ON THE EXTERIOR.
5. ALL PIN-TYPE DOOR HINGES ACCESSIBLE FROM THE OUTSIDE SHALL HAVE NON-REMOVABLE HINGE PINS. HINGES SHALL HAVE MIN. 1/4" DIA. STEEL JAMB STUD WITH 1/4" MIN. PROTECTION. THE STRIKE PLATE FOR LATCHES AND HOLDING DEVICE FOR PROJECTING DEAD BOLTS IN WOOD CONSTRUCTION SHALL BE SECURED TO THE JAMB AND THE WALL FRAMING WITH SCREWS NO LESS THAN 2-1/2" LONG. (91.6709.5, 6709.7)
6. PROVIDE DEAD BOLTS WITH HARDENED INSERTS; DEADLOCKING LATCH WITH KEY-OPERATED LOCKS ON EXTERIOR. DOORS MUST BE OPERABLE FROM THE INSIDE WITHOUT A KEY, SPECIAL KNOWLEDGE, OR SPECIAL EFFORT (LATCH NOT REQUIRED IN B, F, AND S OCCUPANCIES).
7. STRAIGHT DEAD BOLTS SHALL HAVE A MIN. THROW OF 1" AND AN EMBEDMENT OF NOT LESS THAN 5/8", AND A HOOK-SHAPED OR AN EXPANDING-LUG DEADBOLT SHALL HAVE A MINIMUM THROW OF 3/4"/ (6709.2)
8. WOOD PANEL TYPE DOORS MUST HAVE PANELS AT LEAST 9/16 IN. THICK WITH SHAPED PORTIONS NOT LESS THAN 1/4 IN. THICK AND INDIVIDUAL PANELS MUST BE NO MORE THAN 300 SQ. IN. IN AREA. MULLIONS SHALL BE CONSIDERED A PART OF ADJACENT PANELS EX EXCEPT MULLIONS NOT OVER 18 INCHES LONG MAY HAVE AN OVERALL WIDTH OF NOT LESS THAN 2 INCHES. STILES AND RAILS SHALL BE OF SOLID LUMBER IN THICKNESS WITH OVERALL DIMENSIONS OF NOT LESS THAN 1-3/8 INCHES AND 3 INCHES IN WIDTH. (91.6709.1 ITEM 2)
9. SLIDING DOORS SHALL BE PROVIDED WITH A DEVICE IN THE UPPER CHANNEL OF THE MOVING PANEL TO PROHIBIT RAISING AND REMOVING OF THE PANEL IN THE CLOSED OR PARTIALLY OPEN POSITION.
10. SLIDING GLASS DOORS SHALL BE CLOSED AND LOCKED WHEN SUBJECTED TO THE TESTS SPECIFIED IN SEC. 671.1.
11. METAL OR WOODEN OVERHEAD OR SLIDING DOORS SHALL BE SECURED WITH A CYLINDRICAL LOCK, PADLOCK WITH A MIN. 9/32" DIAMETER HARDENED STEEL SHACKLE AND BOLTED, HARDENED STEEL HASPS, METAL SLIDE BOARD, BOLT OR EQUIVALENT DEVICE UNLESS SECURED ELECTRICALLY OPERATED (6711)
12. PROVIDE METAL GUIDES AT TOP AND BOTTOM OF METAL ACCORDION GRATE OR GRILLE-TYPE DOORS AND CYLINDER LOCKS OR PADLOCKS. CYLINDER GUARDS SHALL BE INSTALLED ON ALL CYLINDER LOCKS WHENEVER THE CYLINDER PROJECTS BEYOND THE FACE OF THE DOOR OR IS OTHERWISE ACCESSIBLE TO GRIPPING TOOLS. (6712)
13. IN B, F, M, AND S OCCUPANCIES, PANES OF GLAZING WITH AT LEAST ONE DIMENSION GREATER THAN 5 IN. BUT LESS THAN 48 IN. SHALL BE CONSTRUCTED OF TEMPERED OR APPROVED BURGLARY-RESISTANT MATERIAL OR PROTECTED WITH METAL BARS OR GRILLES (6714).
14. GLAZED OPENINGS WITHIN 40 INCHES OF THE DOOR LOCK WHEN THE DOOR IS IN THE CLOSED POSITION, SHALL BE FULLY TEMPERED GLASS OR APPROVED BURGLARY RESISTANT MATERIALS, OR SHALL BE PROTECTED BY METAL BARS, SCREENS OR GRILLS HAVING A MAXIMUM OPENING OF 2 INCHES. THE PROVISIONS OF THIS SECTIONS SHALL NOT APPLY TO VIEW PORTS OR WINDOWS WHICH DO NOT EXCEED 2 INCHES IN THEIR GREATEST DIMENSIONS. (6713)
15. LOUVERED WINDOWS SHALL BE PROTECTED BY METAL BAS OR GRILLS WITH OPENINGS THAT HAVE AT LEAST ONE DIMENSION OF 6 INCHES OR LESS, WHICH ARE CONSTRUCTED TO PRECLUDE HUMAN ENTRY. (6715.3)
16. OTHER OPERABLE WINDOWS SHALL BE PROVIDED WITH SUBSTANTIAL LOCKING DEVICES. IN B, F, M AND S OCCUPANCIES, SUCH DEVICES SHALL BE GLIDE BARS, BOLTS, CROSS-BARS, AND/OR PADLOCKS WITH MINIMUM 9/32" HARDENED STEEL SHACKLES AND BOLTED, HARDENED STEEL HASPS. (6715.2)
17. SLIDING WINDOWS SHALL BE PROVIDED WITH LOCKING DEVICES. A DEVICES SHALL BE INSTALLED IN THE UPPER CHANNEL OF THE MOVING PANEL TO PROHIBIT RAISING AND REMOVING OF THE MOVING PANEL IN THE CLOSED OR PARTIALLY OPEN POSITION. (6715.1)
18. SLIDING GLASS WINDOWS SHALL BE CLOSED AND LOCKED WHEN SUBJECTED TO THE THE TESTS SPECIFIED IN SEC 6717.2.
19. 19.ANY RELEASE FOR METAL BARS, GRILLS, GRATES, OR SIMILAR DEVICES CONSTRUCTED TO PRECLUDE HUMAN ENTRY THAT ARE INSTALLED SHALL BE LOCATED ON THE INSIDE OF THE ADJACENT ROOM AND AT LEAST 24 INCHES FROM THE CLOSEST OPENING THROUGH SUCH METAL BARS, GRILLS, GRATES OR SIMILAR DEVICES THAT EXCEED TWO INCHES IN ANY DIMENSION. (91.6715.4)
20. ALL OTHER OPENINGS MUST BE PROTECTED BY METAL BARS OR GRILLS WITH OPENINGS OF NOT LESS THAN 6 INCHES IN ONE DIMENSION (91.6716)

FIRE NOTES

1. EXIT SIGNS SHALL BE INTERNALLY OR EXTERNALLY ILLUMINATED.
2. MEANS FOR EXIT ILLUMINATION SHALL BE PROVIDED FROM AN EMERGENCY INVERTER.
3. SIGNAGE SHALL BE VISIBLE FROM ALL SPACES AND SHALL BE SPACED NO MORE THAN 200' APART.
4. PROVIDE EXIT SIGNS AND DIRECTIONAL EXIT SIGNS WITH MINIMUM 6" HIGH BY 3/4" STOKE BLOCK LETTERS ON A CONTRASTING BACKGROUND. SPACING BETWEEN SIGNS SHALL NOT EXCEED 200 FEET.
5. PROVIDE APPROVED LOW-LEVEL EXIT SIGNS IN ALL INTERIOR EXIT CORRIDORS.
6. THE MEANS OF EGRESS, INCLUDING THE EXIT DISCHARGE, SHALL BE ILLUMINATED AT ALL TIMES THE BUILDING SPACE SERVED BY THE MEANS OF EGRESS IS OCCUPIED. THE MEANS OF EGRESS ILLUMINATION SHALL NOT BE LESS THAN 1 FOOT-CANDLE AT THE WALKING SURFACE.
7. DOOR AND FRAME SHALL BEAR AN APPROVED LABEL SHOWING THE RATING FOLLOWED BY THE LETTER "S".
8. PROVIDE A CLASS III STANDPIPE (WET) SYSTEM THROUGHOUT THE STRUCTURE WITH 100' HOSE AND 30' STREAM AS SPACING MAX.
9. EXIT SIGNS ILLUMINATED BY AN EXTERNAL SOURCE SHALL HAVE AN INTENSITY OF NOT LESS THAN 5 FOOT CANDLES.
10. INTERNALLY ILLUMINATED SIGNS SHALL BE LISTED AND LABELED AND SHALL BE INSTALLED IN ACCORDANCE WITH THE MANUFACTURER'S INSTRUCTIONS AND SECTION 2702.
11. EXIT SIGNS SHALL BE ILLUMINATED AT ALL TIMES.
12. EXIT SIGNS SHALL BE CONNECTED TO AN EMERGENCY POWER SYSTEM THAT WILL PROVED AN ILLUMINATION OF NOT LESS THAN 90 MIN. IN CASE OF PRIMARY POWER LOSS, AND SHALL CONSIST OF STORAGE BATTERIES, UNIT EQUIPMENT OR AN ON-SITE GENERATOR. THE INSTALLATION OF THE EMERGENCY POWER SYSTEM SHALL BE IN ACCORDANCE WITH SECTION 2702.
13. EGRESS DOORS SHALL BE READILY OPENABLE FROM THE EGRESS SIDE WITHOUT THE USE OF A KEY OR SPECIAL KNOWLEDGE OR EFFORT. SEE 1008.1.8.3 FOR EXCEPTIONS.
14. DOOR HANDLE, LOCKS AND OTHER OPERATING DEVICES SHALL BE INSTALLED AT A MIN. 34" AND A MAX. 48" ABOVE FINISH FLOOR.
15. ALL EGRESS DOOR OPERATION SHALL COMPLY WITH SECTION 1008.1.9-1008.1.9.7.
16. THE POWER SUPPLY FOR MEANS OF EGRESS ILLUMINATION SHALL NORMALLY BE PROVIDED BY THE PREMISES' ELECTRICAL SUPPLY. IN THE EVENT OF A POWER SUPPLY FAILURE, AN EMERGENCY ELECTRICAL SYSTEM SHALL AUTOMATICALLY ILLUMINATE THE FOLLOWING AREAS:
    A) AISLES AND UNENCLOSED EGRESSS STAIRWAYS IN ROOMS AND SPACES THAT REQUIRE TWO OR MORE MEANS OF EGRESS;
    B) CORRIDORS, EXIT ENCLOSURES AND EXIT PASSAGEWAYS IN BUILDINGS REQUIRED TO HAVE TWO OR MORE EXITS;
    C) EXTERIOR EGRESS COMPONENTS AT OTHER THAN THE LEVEL OF EXIT DISCHARGE IS ACCOMPLISHED FOR BUILDINGS REQUIRED TO HAVE TWO OR MORE EXITS.
    D) INTERIOR EXIT DISCHARGE ELEMENTS, AS PERMITTED IN SECTION 1027.1, IN BUILDINGS REQ'D TO HAVE TWO OR MORE EXITS.
    E) EXT. LANDINGS, AS REQ'D BY SECT. 10087.1.6, FOR EXIT DISCHARGE DOORWAYS IN BLDGS REQD TO HAVE TWO OR MORE EXITS
17. EMERGENCY LIGHTING FACITLITIES SHALL BE ARRANGED TO PROVIDE INITIAL ILLUMINATION THAT IS AT THE LEAST AN AVERAGE OF 1 FOOT-CANDLE (11 LUX) AND A MINIMUM AT ANY POINT OF .1 FOOT-CANDLE (1 LUX) MEASURED ALONG THE PATH OF EGRESS AT FLOOR LEVEL. ILLUMINATION LEVELS SHALL BE PERMITTED TO DECLINE TO 0.6 FOOT-CANDLE (6 LUX) AVERAGE AND A MINIMUM AT ANY POINT OF 0.06 FOOT-CANDLE (0.6 LUX) AT THE END OF THE EMERGENCY LIGHTING TIME DURATION. A MAXIMUM-TO-MINIMUM ILLUMINATION UNIFORMITY RATION OF 40 TO 1 SHALL NOT BE EXCEEDED.
18. THE EXIT SIGNS SHALL ALSO BE CONNECTED TO AN EMERGENCY ELECTRICAL SYSTEM PROVIDED FROM STORAGE BATTERIES UNIT EQUIPMENT OR AND ON-SITE GENERATOR SET, AND THE SYSTEM SHALL BE INSTALLED IN ACCORDANCE WITH THE ELECTRICAL CODE.
19. THIS BUILDING SHALL BE PROVIDED WITH A MANUAL ALARM SYSTEM WITH THE CAPABILITY TO SUPPORT VISIBLE ALARM NOTIFICATION APPLIANCES IN ACCORDANCE WITH NFPA 72". (907.2.9, 907.5.2.3.4)
20. FIRE BLOCKING SHALL BE PROVIDED IN ACCORDANCE WITH SECTION 718 AT THE FOLLOWING LOCATIONS:
    A) IN CONCEALED PLACES OF STUD WALLS AND PARTITIONS, INCLUDING FURRED SPACES, AT CEILINGS AND FLOOR LEVELS. (718.2.2)
    B) IN CONCEALED PLACES OF STUD WALLS AND PARTITIONS, INCLUDING FURRED SPACES, AT 10-FOOT INTERVALS ALONG THE LENGTH OF THE WALL (718.2.2)
    C) AT ALL INTERCONNECTIONS BETWEEN CONCEALED VERTICAL AND HORIZONTAL SPACES SUCH AS OCCUR AT SOFFITS, DROP CEILINGS, COVER CEILINGS AND SIMILAR LOCATIONS. (718.2.3)
    D) IN CONCEALED SPACES BETWEEN STAIR STRINGERS AT THE TOP AND BOTTOM OF THE RUN AND BETWEEN STUDS ALONG AND IN LINE WITH THE RUN OF STAIRS IF THE WALL UNDER THE STAIRS IS UNFINISHED. (718.2.4)
    E) IN OPENINGS AROUND VENTS, PIPES, DUCTS, CHIMNEYYS, FIREPLACES AND SIMILAR OPENINGS WHICH AFFORD A PASSAGE FOR FIRE AT CEILING AND FLOOR LEVELS, WITH NONCOMBUSTIBLE MATERIALS. (718.2.5)
21. THE EMERGENCY POWER SYSTEM SHALL PROVIDE POWER FOR A DURATION OF NOT LESS THAN 90 MINUTES AND SHALL CONSIST OF STORAGE BATTERIES, UNIT EQUIPMENT OR AN ON-SITE GENERATOR. THE INSTALLATION OF THE EMERGENCY POWER SYSTEM SHALL BE IN ACCORDANCE WITH SECTION 2702.
22. INTERIOR FINISH MATERIALS APPLIED TO WALL AND CEILINGS SHALL BE TESTED AS SPECIFIED IN SECTION 802. APPLICATION OF SUCH MATERIALS SHALL BE IN ACCORDANCE WITH SETION 803, 804 AND TABLE 803.9.
23. THE FLAME-SPREAD RATING OF PANELING MATERIALS ON THE WALLS OF THE CORRIDOR, LOBBY AND EXIT ENCLOSURES MUST BE IN ACCORDANCE WITH TABLE 803.9, FOR SPRINKLERED BUILDINGS AND PER THE ESTABLISHED OCCUPANCY TYPE PER ROOM.
24. ANY DECORATIONS SHALL BE NON-COMBUSTIBLE OR FLAME-RETARDANT TREATED IN AN APPROVED MANNER (CURTAINS, DRAPES, HANGINGS, ETC.) (L.A.M.C. 57.22)
25. PROVIDE A PORTABLE FIRE EXTINGUISHER WITH A RATING OF NOT LESS THAN 2-A OR 2-A10BC WITHIN 75 FEET TRAVEL DISTANCE TO ALL PORTIONS OF THE BUILDING ON EACH FLOOR; ALSO DURING CONSTRUCTION. (L.A.M.C. 57.140)
26. PROVIDE A PORTABLE FIRE EXTINGUISHER WITH A RATING NOT LESS THAN 10BC FOR KITCHEN, ELECTRICAL ROOM, MECHANICAL ROOM, OR PARKING GARAGE.
27. PROVIDE FIRE EXTINGUISHERS AS REQUIRED BY FIRE DEPARTMENT FIELD INSEPECTOR.

GREEN BUILDING NOTES

NON-RESIDENTIAL BUILDINGS

1. OUTDOOR LIGHTING SYSTEMS SHALL BE DESIGNED AND INSTALLED TO COMPLY WITH ALL OF THE FOLLOWING:
   a. THE MINIMUM REQUIREMENTS IN CALIFORNIA ENERGY CODE FORL LIGHTING ZONES 1-4
   b. BACKLIGHT, UPLIGHT AND GLARE (BUG) RATINGS AS DEFINED IN IESNA TM-15-11
   c. ALLOWABLE BUG RATINGS NOT EXCEEDING THOSE SHOWN ON TABLE 5.106.8
2. NEW PLUMBING FIXTURES AND FITTINGS SHALL NOT EXCEED THE MAXIMUM ALLOWABLE FLOW RATE SPECIFIED IN TABLE5.303.2.3
3. WHEN A SHOWERHEAD IS SERVED BY MORE THAN ONE SHOWERHEAD, THE COMBINED FLOW RATE OF ALL THE SHOWERHEADS CONTROLLED BY A SINGLE VALVE SHALL NOT EXCEED THE MAXIMUM FLOW RATES SPECIFIED IN THE MAXIMUM ALLOWABLE FLOW RATE COLUMN CONTAINED IN TABLE 5.303.2.3 OR THE SHOWER SHALL BE DESIGNED TO ONLY ALLOW ONE SHOWERHEAD TO BE IN OPERATION AT A TIME.
4. 4. FOR PROJECTS THAT INCLUDE LANDSCAPE WORK, THE LANDSCAPE CERTIFICATION, FORM GRN 12, SHALL BE COMPLETED PRIOR TO FINAL INSPECTION APPROVAL.
5. AUTOMATIC LANDSCAPE IRRIGATORS SHALL BE INSTALLED IN SUCH A WAY THAT IT DOESN'T SPRAY ON THE BUILDING.
6. NONABSORBENT INTERIOR FLOOR AND WALL FINISHES SHALL BE USED WITHIN AT LEAST TWO FEET AROUND AND PERPENDICULAR TO EXTERIOR ENTRIES AND/OR OPENING SUBJECT TO FOOT TRAFFIC.
7. 100% OF EXCAVATED SOIL AND VEGETATION RESULTING FROM LAND CLEARING SHALL BE REUSED OR RECYCLED.
8. IF THE HVAC SYSTEM IS USED DURING CONSTRUCTION, USE RETURN AIR FILTERS WITH A MERV OF 8. REPLACE ALL FILTERS PRIOR TO OCCUPANCY.
9. ALL DUCT AND OTHER RELATED AIR DISTRIBUTION COMPONENT SHALL BE COVERED WITH TAPE, PLASTIC, OR SHEET METAL UNTIL THE FINAL STARTUP OF THE HEATING, COOLING AND VENTILATING EQUIPMENT.
10. ARCHITECTURAL PAINTS AND COATINGS, ADHESIVES, CAULKS AND SEALANTS SHALL COMPLY WITH THE VOLATILE ORGANIC COMPOUND (VOC) LIMITS LISTED IN TABLES 5.504.4.1 - 5.504.4.3.
11. THE VOC CONTENT VERIFICATION CHECKLIST, FORM GRN 2, SHALL BE COMPLETED AND VERIFIED PRIOR TO FINAL INSPECTION APPROVAL. THE MANUFACTURER'S SPECIFICATIONS SHOWING VOC CONTENT FOR ALL APPLICABLE PRODUCTS SHALL BE READILY AVAILABLE AT THE JOB SITE AND BE PROVIDED TO THE FIELD INSPECTOR FOR VERIFICATION.
12. ALL NEW CARPET INSTALLED IN THE BUILDING INTERIOR SHALL MEET THE TESTING AND PRODUCT REQUIREMENTS OF ONE OF THE FOLLOWING:
    i) CARPET AND RUG INSTITUTE'S GREEN LABEL PLUS PROGRAM.
    ii) CALIFORNIA DEPARTMENT OF PUBLIC HEALTH'S SPECIFICATION 01350.
    iii) NSF/ANSI 140 AT THE GOLD LEVEL.
    iiii) SCIENTIFIC CERTIFICATIONS SYSTEMS INDOOR ADVANTAGE GOLD.
13. ALL NEW CARPET CUSHION INSTALLED IN THE BUILDING INTERIOR SHALL MEET THE REQUIREMENTS OF THE CARPET AND RUG INSTITUTE GREEN LABEL PROGRAM.
14. NEW HARDWOOD PLYWOOD, PARTICLE BOARDD, AND MEDIUM DENSITY FIBERBOARD COMPOSITE WOOD PRODUCTS USED IN THE INTERIOR OR EXTERIOR OF THE BUILDING SHALL MEET THE FORMALDEHYDE LIMITS LISTED IN TABLE 5.504.4.5.
15. A COPY OF THE CONSTRUCTION DOCUMENTS OR A COMPARABLE DOCUMENT INDICATING THE INFORMATION FROM ENERGY CODE SECTIONS 110.10(b) THROUGH 110.10(c) SHALL BE PROVIDED TO THE OCCUPANT.
16. A SEPERATE ELECTRICAL PLAN CHECK IS REQUIRED TO VERIFY THE RACEWAY METHOD(S), WIRING SCHEMATICS AND ELECTRICAL CALCULATIONS FOR THE ELECTRICAL CHARGING SYSTEM.
17. THE ELECTRICAL SYSTEM SHALL HAVE SUFFICIENT CAPACITY TO SIMULTANEOUSLY CHARGE ALL ELECTRIC VEHICLES AT THEIR FULL RATED AMPERAGE.
18. A LABEL STATING 'EV CAPABLE' SHALL BE POSTED IN A CONSPICUOUS PLACE AT THE SERVICE PANEL OR SUBPANEL AND NEXT TO THE RACEWAY TERMINATION POINT.

RESIDENTIAL BUILDINGS

1. THE ELECTRICAL SYSTEM SHOULD BE SHALL HAVE SUFFICIENT CAPACITY TO SIMULTANEOUSLY CHARGE ALL DESIGNATED EV SPACES AT FULL RATED AMPERAGE BASED ON LEVEL 2 EVSE. A SEPERATE ELECTRICAL PERMIT IS REQUIRED.
2. FOR PROJECTS THAT INCLUDE LANDSCAPE WORK, THE LANDSAPE CERTIFICATION, FORM GRN 12, SHALL BE COMPLETED PRIOR TO FINAL INSPECTION APPROVAL (STATE ASSEMBLY BILL NO. 1881.
3. ANNULAR SPACES AROUND PIPES, ELECTRICAL CABLES, CONSUITS, OR OTHER OPENINGS IN THE SOLE/BOTTOM PLATES OF EXTERIOR WALLS SHALL BE PROTECTED AGAINST THE PASSAGE OF RODENTS BY CLOSING SUCH OPENINGS WITH CEMENT MORTAR, CONCRETE MASONRY, OR METAL PLATES. PIPING PRONE TO CORROSION SHALL BE PROTECTED IN ACCORDANCE WITH SECTION 313.0 OF THE LOS ANGELES PLUMBING CODE (4.406.1)
4. MATERIALS DELIVERED TO THE CONSTRUCTION SITE SHALL BE PROTECTED FROM RAIN OR OTHER SOURCES OF MOISTURE (4.407.4)
5. CONSTRUCTION WASTE SHALL BE REDUCED BY 50% BY HIRING A CITY OF LOS ANGELES CERTIFIED HAULER (4.408.1)
6. AN OPERATION AND MAINTENANCE MANUAL INCLUDING, AT A MINIMUM, THE ITEMS LISTED IN SECTIO4N.4 10.1, SHALL BE COMPLETED AND PLACED IN THE BUILDING AT THE TIME OF FINAL INSPECTION (4.410.1)
7. ALL DUCT AND OTHER RELATED AIR DISTRIBUTION COMPONENT OPENINGS SHALL BE COVERED WITH TAPE, PLASTIC, OR SHEET METAL UNTIL THE FINAL STARTUP OF THE HEATING, COOLING AND VENTILATING EQUIPMENT (4.504.1)
8. ARCHITECTURAL PAINTS AND COATINGS, ADHESIVES, CAULKS AND SEALANTS SHALL COMPLY WITH THE VOLATILE ORGANIC COMPOUND (VOC) LIMITS LISTED IN TABLES 4.504.4.1 - 4.504.4.3.
9. THE VOC CONTENT VERIFICATION CHECKLIST, FORM GRN 2, SHALL BE COMPLETED AND VERIFIED PRIOR TO FINAL INSPECTION APPROVAL. THE MANUFACTURER'S SPECIFICATIONS SHOWING VOC CONTENT FOR ALL APPLICABLE PRODUCTS SHALL BE READILY AVAILABLE AT THE JOB SITE AND BE PROVIDED TO THE FIELD INSPECTOR FOR VERIFICATION (4.504.2.4)
10. WOOD BURNING FIREPLACES AND OTHER WOOD BURNING DEVICES ARE PROHIBITED (AQMD RULE 445)
11. ALL NEW CARPET INSTALLED IN THE BUILDING INTERIOR SHALL MEET THE TESTING AND PRODUCT REQUIREMENTS OF ONE OF THE FOLLOWING:
    i) CARPET AND RUG INSTITUTE'S GREEN LABEL PLUS PROGRAM.
    ii) CALIFORNIA DEPARTMENT OF PUBLIC HEALTH'S SPECIFICATION 01350.
    iii) NSF/ANSI 140 AT THE GOLD LEVEL.
    iiii) SCIENTIFIC CERTIFICATIONS SYSTEMS INDOOR ADVANTAGE GOLD.
12. ALL NEW CARPET CUSHION INSTALLED IN THE BUILDING INTERIOR SHALL MEET THE REQUIREMENTS OF THE CARPET AND RUG INSTITUTE GREEN LABEL PROGRAM (4.504.4)
13. NEW HARDWOOD PLYWOOD, PARTICLE BOARD, AND MEDIUM DENSITY FIBERBOARD COMPOSITE WOOD PRODUCTS USED IN THE INTERIOR OR EXTERIOR OF THE BUILDING SHALL MEET THE FORMALDEHYDE LIMITS LISTED IN TABLE (4.504.5)
14. FORMALDEHYDE EMISSIONS VERIFICATION CHECKLIST, FORM GRN 3, SHALL BE COMPLETED PRIOR TO FINAL INSPECTION APPROVAL. THE MANUFACTURER'S SPECIFICATIONS SHOWING FORMALDEHYDE CONTENT FOR ALL APPLICABLE WOOD PRODUCTS SHALL BE READILY AVAILABLE AT THE JOB SITE AND BE PROVIDED TO THE FIELD INSPECTOR FOR VERIFICATION (4.504.5)
15. BUILDING MATERIALS WITH VISIBLE SIGNS OF WATER DAMAGE SHALL NOT BE INSTALLED. WALL AND FLOOR FRAMING SHALL NOT BE ENCLOSED UNTIL IT IS INSPECTED AND FOUND TO BE SATISFACTORY BY THE BUILDING INSPECTOR (4.505.3)
16. THE HEATING AND AIR-CONDITIONING SYSTEM SHALL BE SIZED AND DESIGNED USING ANSI/ACCA MANUAL J- 2004, ANSI/ACCA 29-D-

TYPE VA CONSTRUCTION

1. CONTINUOUS DRYWALL BEHIND ALL TUBS IS REQUIRED UNLESS THE WALLS ARE WITHIN THE UNIT AND NON- BEARING.
2. ALL INTERIOR PARTITIONS SHALL BE CONSTRUCTED OF NOT LESS THAN 1-HOUR FIRE RESISTIVE CONSTRUCTION.
3. ATTIC ACCESS OPENINGS IN 1-HOUR CEILING CAN BE 2 LAYERS OF 3/4" PLYWOOD OR ONE LAYER OF 1-5/8" T&G MATERIAL, SELF-CLOSING.
4. ALL OPENINGS IN FLOORS ARE REQUIRED TO BE ENCLOSED BY A SHAFT HAVING WALL, FLOOR AND CEILING OF 2-HOUR FIRE RESISTIVE CONSTRUCTION.
5. RECESSED CEILING LIGHT FIXTURES MUST BE BOXED AROUND WITH 5/8" TYPE "X" DRYWALL TO MAINTAIN THE 1-HOUR CEILING ASSEMBLY.
6. CONTINUOUS DRYWALL IS REQUIRED BEHIND ALL ELECTRICAL SERVICE PANELS, FIRE HOSES AND MEDICINE CABINETS.
7. EXHAUST FANS FROM THE BATHROOM MUST ENTER THROUGH THE WALL. DAMPERS ARE REQUIRED IF THE CEILING IS PENETRATED.
8. PLUMBING PENETRATION THROUGH HORIZONTAL OCCUPANCY SEPERATIONS SHALL BE BOXED OUT AND FILLED WITH APPROVED SAFING MATERIAL. INSULATION IS NOT APPROVED.
9. PENETRATION OF THE 1-HOUR CEILING BY DUCTS FROM THE FAU AND THE STOVE REQUIRE DAMPERS (USE A DUCTLESS HOOD WHENEVER POSSIBLE). ATTIC UNITS (INCLUDING HEAT PUMPS) REQUIRE DAMPERS AT ALL CEILING PENETRATIONS.

EGRESS & ACCESSIBILITY NOTES

1. MAXIMUM EXIT ACCESS TRAVEL DISTANCE FOR R-2 OCCUPANCY, PER TABLE 1016.1, IS 250' WITH AN AUTOMATIC SPRINKLER SYSTEM
2. MAXIMUM EXIT ACCESS TRAVEL DISTANCE FOR S-2 OCCUPANCY, PER TABLE 1016.1, IS 400' WITH AN AUTOMATIC SPRINKLER SYSTEM
3. NOTED STAIR WIDTHS ARE TAKEN FROM INSIDE OF STRINGER TO INSIDE OF STRINGER, NOT THE CLEAR WIDTH BETWEEN HANDRAILS, TYPICAL UNLESS OTHER NOTED.ALL PORTIONS OF THE MEANS OF EGRESS SHALL COMPLY WITH SECTION 1003 OF THE 2010 CBC.
4. REGARDLESS OF THE OCCUPANT LOAD SERVED, ALL EXIT DOORS SHALL BE OPERABLE FROM THE INSIDE WITHOUT THE USE OF A KEY OR SPECIAL KNOWLEDGE.
5. CONTRACTOR SHALL CHALK OUT ALL NON-BEARING WALLS PRIOR TO FRAMING AND CONTACT OWNER/ARCHITECT FOR FIELD INSPECTION OF ADA CLEARANCES PRIOR TO FRAMING.
6. ALL DOORS TO BE A MINIMUM OF 3'-0" WIDE x 6'-8" HIGH MINIMUM (U.O.N., SEE PLANS FOR LARGER EGRESS WIDTHS) EGRESS DOOR, SEE SCHEDULE FOR FURTHER INFORMATION (HEIGHTS AND WIDTHS MAY VARY).
7. ALONG EGRESS PATH, MAINTAIN 44" MINIMUM WIDTH AT INTERIOR AND 48" MINIMUM AT EXTERIOR (U.O.N. FOR LARGER OCCUPANT LOADS) CLEAR WIDTH x 7'-6" MIN. CLEAR VERTICAL CLEARANCE CONTINUOUS.
8. PANIC HARDWARE SHALL BE INSTALLED ON ALL DOORS OPENING IN THE DIRECTION OF EGRESS TRAVEL.
9. THE SEPERATION DISTANCE OF THE EXIT DOORS OR EXIT ACCESS DOORWAYS SHALL NOT BE LESS THAN ONE THIRD OF THE LENGTH OF THE MAXIMUM OVERALL DIAGONAL DIMENSION OF THE AREAS SERVED, PER SECTION 1015.2.1 OF 2012 CBC, EXCEPTION 2.
10. ALL EGRESS STAIRS ARE SIZED TO ACCOMODATE HALF OF THE TOTAL FLOOR LOAD PER CODE SECTION 1005.1.
11. ELEVATORS SHALL COMPLY WITH SECTION 1124A, CAR SIZE 1124A.3.2, DOOR SIZE 1124A3.2.1 AND ASME A17.1, TITLE 8 CA. CODE OF REGULATIONS UNDER ELEVATOR SAFETY ORDERS.
12. FAUCET CONTROLS AND OPERATING MECHANISMS SHALL BE OPERABLE WITH ONE HAND AND SHALL NOT REQUIRE TIGHT GRASPING, PINCHING OR TWISTING OF THE WRIST. THE FORCE REQUIRED TO ACTIVATE CONTROLS SHALL NOT BE GREATER THAT 5 LB. FT.
13. HOT WATER AND DRAIN PIPES EXPOSED UNDER SINKS SHALL BE INSULATED OR OTHERWISE CONFIGURED SO AS TO PRTECT AGAINST CONTACT. THERE SHALL BE NO SHARP OR ABRASIVE SURFACES UNDER SINKS.
14. MINIMAL VERTICAL CLEARANCE OF 8' - 2" AT ACCESSIBLE PARKING SPACES AND ALONG AT LEAST ONE VEHICLE ACCESS ROUTE TO SUCH SPACES FROM SITE ENTRANCES AND EXITS.
15. TACTILE EXIT SIGNS SHALL BE POSTED AT ALL EGRESS DOORS.

THE ABOVE DRAWINGS AND SPECIFICATIONS AND IDEAS, DESIGNS AND ARRANGEMENTS REPRESENTED THEREBY ARE AND SHALL REMAIN THE PROPERTY OF THE ARCHITECT AND NO PART THEREOF SHAL BE COPIED DISCLOSED TO OTHERS OR USED IN CONNECTION WITH ANY OTHER WORK OR PROJECT OTHER THAN THE SPECIFIC PROJECT FOR WHICH THEY HAVE BEEN PREPARED AND DEVELOPED, WITHOUT THE WRITTEN CONSENT OF THE ARCHITECT. VISUAL CONTACT WITH THESE DRAWINGS OR SPECIFICATIONS SHALL CONSTITUTE CONCLUSIVE EVIDENCE OF ACCEPTANCE OF THESE RESTRICTIONS.

NO.	REVISIONS	DATE
01	PLAN CHECK REVISIONS	06/06/2016

LICENSED ARCHITECT
STEPHEN M. ALBERT
NO. C 9412
REN. 5-31-13
STATE OF CALIFORNIA

1833 N. GAREY AVE.
1833 NORTH GAREY AVENUE
PAMONA, CALIFORNIA 91767
GENERAL NOTES

the albert group architects
2032 Stoner Ave | Los Angeles, CA 90025 310.820.8863

C.U.P NUMBER:

PROJECT NUMBER: 14130

PROJECT STATUS: PLAN CHECK RESUBMITTAL

ISSUE DATE: 07/18/2016

SHEET NUMBER: A0.01

DPR RESOLUTION NO. 16-001

DECISION AND FINDINGS OF FACT BY THE DIRECTOR OF DEVELOPMENT AND NEIGHBORHOOD SERVICES OF THE CITY OF POMONA, CALIFORNIA APPROVING DEVELOPMENT PLAN REVIEW NO. 2014-003 FOR THE DEVELOPMENT OF AN APPROXIMATELY 47,610-SQUARE FOOT, THREE-STORY MIXED USE BUILDING CONTAINING 35 RESIDENTIAL UNITS, APPROXIMATELY 6,640-SQUARE FOOT COMMERCIAL RETAIL SPACE, 88-SPACE AT-GRADE AND SUBTERRANEAN PARKING GARAGE, AND VARIOUS ONSITE LANDSCAPE AND HARDSCAPE IMPROVEMENTS ON A VACANT 0.66 ACRE LOT ON PROPERTY LOCATED AT 1833 NORTH GAREY AVENUE.

WHEREAS, the applicant, The Albert Group Architects, has filed an application on behalf of the property owner, Moshe Levey, for Development Plan Review (DPR) for the development of an approximately 47,610-square foot, three-story mixed use building containing 35 residential units, approximately 6,640-square foot commercial retail space, 88-space at-grade and subterranean parking garage, and various onsite landscape and hardscape improvements on a vacant 0.66 acre lot on property located at 1833 N. Garey Avenue;

WHEREAS, the subject site is currently zoned within the Pomona Corridors Specific Plan (PCSP) "Workplace Gateway Segment", and designated "Transit Oriented District: Neighborhood" by the City's General Plan;

WHEREAS, in accordance with Section 2.0.5.C of the PCSP a Development Plan Review (DPR) is required for any new development projects located within the plan area;

WHEREAS, the Development and Neighborhood Services Director of the City of Pomona has, after giving notice thereof as required by law, held a public hearing on February 10, 2016, concerning Development Plan Review (DPR 14-003);

WHEREAS, the Development and Neighborhood Services Director has carefully considered all pertinent testimony offered in the case as presented at the hearing;

NOW, THEREFORE, BE IT HEREBY RESOLVED by the Development and Neighborhood Services Director of the City of Pomona, California:

SECTION 1. The Development and Neighborhood Services Director exercising independent judgment has determined that, pursuant to the Guidelines for Implementation of the California Environmental Quality Act (CEQA), this action as defined is Categorically Exempt under Section 15332, Class 32 (In-fill Development). The Development and Neighborhood Services Director finds that; 1) the proposed project is consistent with the General Plan and Zoning Ordinance of the City; 2) the parcel is smaller than five acres; 3) the project site has no value as habitat for endangered, rare or threatened species; 4) this project will not have significant effects upon the environment and; 5) the site can adequately be served by utilities and public services; and

SECTION 2. If any part, provision, or section of this resolution is determined by a court or other legal authority with jurisdiction over the subject matter of this resolution to be unenforceable or invalid, the remainder of the entirety of this resolution shall not be affected and shall continue in full force and effect. To this end, the provisions of this resolution are severable.

SECTION 3. In accordance with Section 2.0.5.A.(4) of the PCSP, the Development and Neighborhood Services Director must make findings in order to approve Development Plan Review (DPR 14-003). Based on consideration of the whole record before it, including but not limited to, public testimony received at the public hearing on this matter, and evidence made part of the public record, the Director hereby finds as follows:

The project is consistent with the City's General Plan and all applicable requirements of the City Code.

The City of Pomona General Plan designates the subject site as a "Transit Oriented District: Neighborhood" Place Type. "Transit Oriented District: Neighborhood" are defined as the most active and walkable districts in the City that feature development types of greater intensity than surrounding areas. These districts feature a mix of uses – horizontally mixed-use in most cases but vertically mixed-use in the densest locations – typically with retail, commercial and civic activity on the ground floor and housing, lodging or workplace uses above. The mixed-use development project is consistent with the City's General Plan because it provides a vertically mixed-use building that serves the potential to accommodate space(s) for ancillary facilities and services near Pomona Valley Hospital Medical Center. Furthermore, the development project is consistent with the development standards and design guidelines of the Pomona Zoning Ordinance (PZO) and PCSP in terms of setbacks, building height, onsite parking, use types, and overall architectural design.

The project will not be detrimental to the general welfare of persons working or residing in the vicinity nor detrimental to the value of the property and improvements in the neighborhood.

The mixed-use development project will not be detrimental to the general welfare of persons working or residing in the vicinity nor detrimental to the value of the property and improvements in the neighborhood as the project will substantially comply with all development and design standards of the "Workplace Gateway Segment" of the PCSP. The project is not anticipated to generate noise, traffic, lighting, and privacy impacts detrimental to residents, occupants, and properties within the surrounding area and inconsistent with the subject property's zoning.

The project will not adversely affect the Circulation Plan of the Corridors Specific Plan.

The subject parcel is located with frontage along N. Garey Avenue. The Traffic and Transportation Division of the City of Pomona Public Works Department has reviewed both off-site and on-site circulation patterns and have not expressed concern with the project's overall proposed vehicular mobility. The mixed-use development project will not introduce new driveway approaches along N. Garey Avenue, but rather utilize an existing alleyway to serve as the project's primary access. Two driveway aisles will be located immediately adjacent to the alleyway, with the closest driveway aisle located approximately 50 feet from N. Garey Avenue. The driveway aisle will be adequately setback from N. Garey Avenue to minimize potential vehicular stacking. The project will allow pedestrian access along N. Garey Avenue in compliance with the publically accessible open space requirements set forth within the PCSP.

The project complies with the applicable provisions of the Pomona Corridors Specific Plan and other applicable regulations.

The project design has been reviewed and meets all applicable provisions of the PCSP and other applicable regulations.

SECTION 4. Based upon the above findings, the Development and Neighborhood Services Director hereby approves Development Plan Review (DPR 14-003) subject to compliance with all applicable laws and ordinances of the City as well as the addition of the following conditions, violations of which (or failure to complete any of which) shall constitute grounds for revocation of the Development Plan Review or any portion thereof:

DEVELOPMENT AND NEIGHBORHOOD SERVICES DEPT. – PLANNING DIVISION

General Conditions

1. The subject property shall be developed and/or used in a manner consistent with the project plans reviewed and approved by the Development and Neighborhood Services Director on February 10, 2016, and as illustrated in the stamped approved plans dated January 14, 2016, and colors and materials sample dated August 11, 2015. Any major modifications to the approved project plans shall be reviewed and approved by the Planning Division as part of a modification to the approved plans. Any minor modifications that do not affect the overall intent of the approved project, may be reviewed and approved by the Development Services Manager.

2. This approval shall lapse and become void if construction has not commenced under a valid building permit, within one (1) year from the date of this approval (February 10, 2017), in accordance with PCSP Section 2.0.5.A(6). The Planning Division may extend this period for a maximum of two, one (1) year extensions upon receipt of an application for a Time Extension request submitted by the applicant at least thirty (30) days before the expiration date of this approval, consistent with PCSP Section 2.0.5(A)6.

3. The applicant shall include all conditions of approval from Development Plan Review (DPR 14-003) related to the project which shall be placed on the title sheet of construction plans prior to plan check submittal.

4. The applicant shall submit construction drawings for plan check to all required City of Pomona departments plans shall be consistent with all required development standards outlined in the PCSP Section 2.1.8 Workplace Gateway Segment outlined in Section 2.1.8.A Development Standards Chart.

5. The project is subject to a ten (10) calendar day appeal period. Written appeals may be filed with the City Clerk within ten calendar days by one or more City Council members or the applicant. The appeal shall be filed with the City Clerk within ten (10) calendar days from the date of action by the Development and Neighborhood Services Director.

6. The applicant shall indemnify, protect, defend, and hold harmless, the City, and/or any of its officials, officers, employees, agents, departments, agencies, and instrumentalities thereof, from any and all claims, demands, law suits, writs of mandamus, and other actions and proceedings (whether legal, equitable, declaratory, administrative or adjudicatory in nature), and alternative dispute resolutions procedures (including, but not limited to arbitrations, mediations, and other such procedures), (collectively "Actions"), brought against the City, and/or any of its officials, officers, employees, agents, departments, agencies, and instrumentalities thereof, that challenge, attack, or seek to modify, set aside, void, or annul, the any action of, or any permit or approval issued by, the City and/or any of its officials, officers, employees, agents, departments, agencies, and instrumentalities thereof (including actions approved by the voters of the City), for or concerning the project, whether such Actions are brought under the California Environmental Quality Act, the Planning and Zoning Law, the Subdivisions Map Act, Code of Civil Procedure Section 1085 or 1094.5, or any other state, federal, or local statute, law, ordinance, rule, regulation, or any decision of a court of competent jurisdiction. It is expressly agreed that the City shall have the right to approve, which approval will not be unreasonably withheld, the legal counsel providing the City's defense, and that applicant shall reimburse City for any costs and expenses directly and necessarily incurred by the City in the course of the defense. City shall promptly notify the applicant of any Action brought and City shall cooperate with applicant in the defense of the Action.

7. In case of violation of any of the conditions of approval or City law, the property owner and tenant will be issued a Notice of Correction. If said violation is not remedied within a reasonable period of time and/or a subsequent violations of the conditions of approval and/or City law occurs within ninety (90) days of any Notice of Correction, the property owner shall be held responsible to reimburse the City for all staff time directly attributable to enforcement of the conditions of approval and/or City law, including, but not limited to, revocation of the herein conditional use permit.

8. Prior to the issuance of building permits, landscape and irrigation plans shall be prepared by a licensed landscape architect and presented to the Planning Division for review and approval. Landscaping to include a variation of trees, shrubs, vines and ground covers, shall be installed and permanently maintained in all common areas of the project site, and shall be in substantial conformance to the conceptual landscaping plan submitted as part of the Development Plan Review process. The plans shall conform to the State Model Water Efficient Landscape Ordinance per AB 1881 and landscape requirements contained in the PCSP and applicable portions of Section .503-J of the PZO. A landscaping maintenance bond shall be required and held for a period of one (1) year to ensure the project's compliance with the approved landscaping. Amount shall be determined by the Development Services Manager.

9. Prior to issuance of building permits, the applicant shall submit, concurrently with the Plan Check process, and obtain the approval from the Planning Division of a lighting plan (photometric) demonstrating a minimum one foot-candle of illumination of parking, driveway, walkways, and common areas. The lighting plan shall include a site plan showing the locations of ground-mounted and building-mounted light fixtures, design and photometric information on fixtures, and shielding to orient light away from adjacent properties and buildings.

10. Prior to issuance of a certificate of occupancy, in order to ensure future owners are made aware of conditions of approval, the applicant shall record this resolution with the Los Angeles County Recorder's office and forward copies to the City of Pomona Planning Division.

11. The applicant shall conform to Section .5809-24 of the PZO pertaining to public art requirements for private development by complying with one of the following two options:

   a) Placement of an approved Public Art on the Project site.

      i) The Applicant may decide to place an approved Public Art on a private development site. The Public Art, and all eligible expenditures associated with installation of the Public Art (as described in the Manual), shall be in an amount equal to or in excess of the Public Art Allocation.

      ii) A Final Design Plan of the Public Art to be installed on Project site shall be approved by the Cultural Arts Commission before issuance of a building or grading permit for the Project.

      iii) The Public Art shall be installed on the Project site before issuance of a Certificate of Occupancy, including any temporary Certificate of Occupancy, for the Project. In cases where the Public Art cannot be installed on the Project site before issuance of a Certificate of Occupancy, the Applicant may post a cash bond to assure installation of the Public Art. The cash bond shall be in an amount equal to the Public Art Allocation or an amount based on any remaining, unexpended artwork budget as determined by the Development and Neighborhood Services Director. The bond shall not be released until the Public Art has been completed and installed on the Project site in accordance with the approved Final Design Plan.

   b) Payment of an In-lieu Contribution.

      i) Rather than place an approved Public Art on the Project site, the Applicant may choose to pay an In-lieu Contribution. The In-lieu Contribution shall be submitted to the City and deposited into the Public Art Fund before issuance of any building or grading permit for the Project.

      ii) Use of In-lieu Contributions shall comply with the following:

         (1) In-lieu Contributions shall be used for the acquisition and installation of Public Art on public or private property in the City, except that up to 1/3 of the In-lieu Contribution may be used for maintenance of the proposed Public Art or an existing Public Art that is listed on the City's registry of Public Art.

         (2) In-lieu Contributions may be aggregated with other funds contained in the Public Art Fund for the purpose of providing a single qualifying Public Art project.

12. Pursuant to City of Pomona Ordinance No. 3506, prior to issuance of any grading or building permits, the applicant or developer shall pay the following Development Impact "Miscellaneous Fees". Traffic Signal & Control Device Program; Road & Highway Improvement Program; Parks & Recreation improvement program; and Public Safety Improvement Program.

13. The site plan shall include all utility apparatus, such as but not limited to, backflow devices and Edison transformers. Utility meters shall be screened from view from public right-of-ways. Backflow prevention devices shall be not be located in the front yard setback and shall be screened from view.

14. The site plan and elevations shall include the location of all gas meters, water meters, electrical panels, air conditioning units, mailboxes (as approved by the United States Postal Service), and similar items. If located on a building, they shall be architecturally integrated with the design of the building, non-obtrusive, not interfere with sidewalk areas and comply with required setbacks.

15. Any building elevations visible from public view or along the periphery of the development shall be architecturally enhanced in a similar fashion to the front elevations (i.e., enhanced window and door treatments and contrasting building materials).

16. The installation of fences and walls that were not contemplated as part of this permit will require the submittal of a "Fence and Wall Permit" for review and approval by the Planning Division.

17. Blockwall/fencing plans (including a site plan, section drawings, and elevations depicting the height and material of all retaining walls, walls, and fences) consistent with the grading plan shall be submitted to and approved by the Planning Division. Double walls shall be avoided to the greatest extent feasible. The applicant shall coordinate with the northerly adjacent property owner(s) and make reasonable attempts to construct one common property line wall. If coordination with the property owner cannot be accomplished, the applicant shall construct up to a six (6) foot high decorative wall located entirely within the subject property. Prior to construction of any new walls, a plan must be submitted identifying the removal of any existing walls located on the subject property. Any removal of walls on private residential property and construction of a new common wall shall include approval by the adjacent property owner(s). The plans shall identify materials, seep holes and drainage.

18. During demolition, grading, site development, and/or construction, all requirements of the PZO and Municipal Code including the noise provisions shall be adhered to. All activities including truck deliveries associated with construction, grading, be limited to Monday through Saturday, between 7:00 AM and 8:00 PM, and provided the noise level created by such activities do not exceed the noise standard of 65 dB(A) plus the limits specified in section 18-311(b) as measured on residential property and any vibration created does not endanger the public health, welfare and safety.

19. There shall be no activity conducted on the subject site that exceeds the noise and vibration parameters of Pomona City Code Section 18-301, *et seq.*, and City Council Ordinance No. 3939 at any time, or such other ordinance enacted related to noise and vibration.

20. The construction area shall be kept clean at all times prior to, during, and after construction.

21. The property owner shall remove any graffiti on the project site within 24 hours of discovery. The paint utilized to cover the graffiti must substantially match the existing structure. In the event that the paint finish of the abated area is noticeably distinguishable from the rest of the structure, the property owner shall paint additional portions of the building to minimize the disparity, subject to the approval of the Development Services Manager.

22. The property owner shall provide regular maintenance and cleaning of all exterior walkways, patios, canopies, sidewalks, and landscaped parkways in compliance with Pomona City Code 62-351.

23. The private balconies areas shall be kept free and clear of any unnecessary debris and maintained in an orderly fashion at all times.

24. All landscaping shall be maintained in a neat and clean manner, and in conformance with the approval of Development Plan Review 2014-003. Prior to removing or replacing any landscaped areas, check with the Planning Division. Substantial changes may require approval by the Development and Neighborhood Services Director.

DEVELOPMENT AND NEIGHBORHOOD SERVICES DEPT. – BUILDING AND SAFETY DIVISION

25. The design must be reviewed and stamped by an architect or engineer licensed in the State of California- (Business and Professions code Sections 5537, 5538 and 6737.1).

26. A building permit shall be obtained for the proposed construction and site development. The design of the building shall comply with the 2013 California Building Code, Chapters 5, 6, 7, 9, 10, II, 12, 14, 15 and 25 for nonstructural provisions and Chapter 16, 17, 18, 19, 21, 22 and 23 for the structural provisions.

27. All grading shall conform to the 2013 California Building Code, Appendix J, and all other relevant laws, ordinances and resolutions governing grading as adopted by the City of Pomona. The applicant shall obtain a grading permit from the Building & Safety Division prior to commencing any grading or site excavation.

28. Geotechnical and/or soils reports required in order to obtain a grading permit shall be submitted to the Building Official for review and approval prior to issuance of a grading permit. All grading shall be in conformance with the recommendations of the geothechnical/soils reports as approved by the City of Pomona.

29. All proposed electrical work shall comply with the 2013 California Energy Code and all other relevant laws, ordinances and resolutions governing Energy conservation as adopted by the City of Pomona.

30. All proposed electrical work shall comply with the 2013 California Electrical Code and all other relevant laws, ordinances and resolutions governing electrical as adopted by the City of Pomona.

31. All proposed mechanical work shall comply with the 2013 California Mechanical Code and all other relevant laws, ordinances and resolutions governing mechanical as adopted by the City of Pomona.

32. All proposed plumbing work shall comply with the 2013 California Plumbing Code and all other relevant laws, ordinances and resolutions governing plumbing as adopted by the City of Pomona.

33. Proposed project shall comply with the 2013 California Green Building Standards Code and all other relevant laws, ordinances and resolutions governing sustainable design as adopted by the City of Pomona.

PUBLIC WORKS DEPARTMENT

Parcel Map Certificate of Correction and Easement Requirements

34. No permanent structures (block walls, gates, etc.) shall be constructed over the area corresponding to the existing **"Ingress and Egress Easement to Parcel 1"** depicted on Parcel Map PM 26558; this requirement shall not apply to the westerly 85.69 feet by 15 feet area of said easement, based on the recorded Quit Claim Deed #20070907628.

35. No encroachment is allowed in the public alley right-of-way along the southerly property line, to allow the placement of parking stalls or the construction of the ramp leading to the subterranean garage.

36. A **Certificate of Correction** for Parcel Map PM 26558, MB 324-021-022, recorded on June 23, 2004, shall be prepared by a land surveyor and submitted to the City Engineer for approval; said certificate shall include the change of Garey Avenue right-of-way, from the currently incorrect width of 110 feet to 90 feet. The Certificate of Correction shall be recorded prior to the approval of the grading plan.

Improvement Plans Requirements

37. Applicant/Developer shall submit the grading, drainage and erosion control plans for review and approval by the Public Works, Planning and Building and Safety Departments.
   a) The scale used for the plans needs to be large enough (1"= 10' is preferred) to clearly show all the details.
   b) One-foot topographic contours of the site must extend a minimum of 15 feet beyond the boundary lines.
   c) The plans shall include sufficient cross sections to show all block wall locations, parkway width and all permanent facilities that might require maintenance and access easements.
   d) Drainage configurations on the existing adjacent properties shall not be altered, redirected or modified in any way.

38. Prior to issuance of the grading permit the Applicant/Developer shall submit written notifications of adjacent property owners regarding the direct and indirect impact associated with the proposed construction. The notification shall include a statement confirming that the existing public services (sewer, water, storm drain) to adjacent property owners will not be affected by the proposed development.

39. Prior to the issuance of the grading permit the applicant/developer shall provide non-interference letters from all applicable utility agencies for all utility easements located within the areas subject to grading activities. All such documents shall be subject to review and approval by the City Engineer.

40. Prior to issuance of the grading permit the Applicant/Developer shall submit a soils and geologic report to address the soil's stability, infiltration rate and geological conditions of the site.

41. Applicant/Developer shall submit public street improvement plans to include the following:
   a) New sidewalk, curb, and gutter along the Garey Avenue property frontage.
   b) Reconstruction of the public alleys bordering the southerly and the westerly property lines, in compliance with the City standards; the improvements to the westerly public alley shall extend to Willow Street.
   c) Overlay paving of Garey Avenue, along the lot frontage, from curb to street centerline or over the entire street width, depending on the required utility trenching.
   d) If the "Ingress and Egress Easement for Parcel 1" is vacated and recorded as required, the Applicant/Developer is responsible for the reconstruction of the Garey Avenue driveway approach and driveway approach drainage improvements for Parcel 1 of PM 26558, in compliance with the City standards and ADA requirements.
   e) Landscaped parkway along Garey Avenue lot frontage shall be maintained by the property owner in compliance with Pomona Municipal Code Section 46-496.
   f) Existing sewer, water and storm drain infrastructure, including laterals.
   g) Site runoff shall be intercepted on site and directed to the public storm drain system by use of parkway drains built in compliance with the City standards.
   h) Unobstructed visibility shall be ensured at all intersections along the project boundaries.
   i) Undergrounding of existing and proposed overhead utility lines along Garey Avenue, to conform with the City of Pomona Municipal Code Section 62-31(b).
   j) Easement and right-of-way dimensions.
   k) Note: "It is the owner's and the contractor's responsibility to repair all damage to the existing public improvements due to the proposed construction activities and to address all repairs requested by the Public Works Inspector based on the inspector's review of the current condition of the said public improvements".
   l) The demolition or relocation of all public improvements (street lights, signs, trees, vaults, catch basins, hydrants, etc.) due to the proposed project construction must be coordinated and agreed upon by the appropriate City departments, shall be designed per City standards and applicable ADA requirements, and must be reviewed and approved by the Engineering Division of the Public Works Department.

42. Prior to approval of any improvement plans and/or grading permit issuance Applicant/Developer shall prepare a detailed hydrology study based on a 50-year storm event and a hydraulic analysis of the existing and proposed drainage conveyance capacity. The Developer is responsible to comply with the approved hydrology/hydraulic study recommendations necessary to meet minimum Federal, State, County and City requirements.

43. In recognition of the need to address traffic conditions generated by cumulative development along the Corridor Specific Plan (CSP) areas, Applicant/Developer is responsible for the project's compliance with the CSP requirements and shall participate in a CSP assessment district, or similar fair and appropriate mechanism, to provide funds for maintaining and augmenting public improvements, should such a mechanism be established by the City. Applicant/Developer shall pay the applicable CSP in-lieu fee for public improvements required as part of this project, presently estimated at $126,482. This fee is subject to the City Council review and approval in a forthcoming mitigation fee resolution.

44. All improvements to the City's **water** system shall be installed at the Developer's expense in accordance with the provisions of the City of Pomona Water Code, Construction Standards and the Federal, State and County Public Health requirements, including payment of all required plan check fees, bonds, connection fees, water meter setting fees and all additional water facilities advance payments. All public water facilities that are existing or proposed to be installed must be approved by the City Engineer prior to the issuance of the grading permit.

45. Prior to the approval of the water improvement plans Applicant/Developer shall calculate the new water demand (based on fixture units) to verify that the proposed service(s) can provide the water demand given the size, pressure, and distance of these services from the proposed buildings. This calculation shall include fire and domestic water demands. This calculation shall be submitted to the Water Operations Division of the Public Works Department.

   If verification of static pressure is desired, it may be obtained by requesting a fire hydrant flow test from the Public Works Department. The localized approximate static pressure for the proposed project area is 90-95 psi.

   Since the static system pressure exceeds 80 psi, pressure regulators shall be provided on the service lines to protect internal fixtures from high pressure.

   The proposed public water improvement plans shall include:
   a) All existing and new utilities, including existing and proposed water facilities, water services and water easements:
      i) One (1) twelve-inch (12") DIP water main within N. Garey Avenue; there are no existing services currently serving this project area.
      ii) There are public fire hydrants within 500 feet of the proposed project site.
   b) All existing private/public infrastructure and water facilities adjacent to and affecting the development property including all underground utility connections.
   c) Any existing public water facilities located on private property shall be installed within a City of Pomona easement, and will be maintained by the City.
   d) Meter(s) shall not be placed in driveways, parking spaces or obstructed by walls. City of Pomona shall be provided an easement for maintenance access.
   e) All proposed onsite hydrants shall be private and be painted red.
   f) Water Development plans are for public water improvements only; all private water improvements shall be addressed separately; any private onsite water improvements are the owner's responsibility and not the City's.
   g) Property address, legal description, property lines, street centerline, curb-line, existing and proposed utility easements, and right-of-way with dimensions.

   Additionally, the existing water infrastructure shall be shown on the site plan.

46. The edge of all new meter vaults, if necessary, should be located in public right-of-way or the sidewalk two inches (2") from the back of the curb per Standard No.'s 11 and 12 of the *City of Pomona Water Division Standard Specifications for Water Facility Construction, January 2006*. Meter(s) cannot be placed in driveways, parking spaces or within the property line, to allow City personnel access to these meters for future maintenance.

47. All newly installed water lines shall be disinfected per the *City of Pomona Water Division Standard Specifications for Water Facility Construction, January 2006* before connection to the existing water main.

48. The City will install meters less than 2 inches in size. The Contractor for the project is responsible for installing meters greater than 2 inches in the public right-of-way.

49. All project related trench repairs in City maintained streets shall be per City Standard A-26-02. Following completion of all street/utility work, and prior to the issuance of the Certificate of Occupancy Applicant/Developer shall be required to repair all affected lanes

THE ABOVE DRAWINGS AND SPECIFICATIONS AND IDEAS, DESIGNS AND ARRANGEMENTS REPRESENTED THEREBY ARE AND SHALL REMAIN THE PROPERTY OF THE ARCHITECT AND NO PART THEREOF SHAL BE COPIED DISCLOSED TO OTHERS OR USED IN CONNECTION WITH ANY OTHER WORK OR PROJECT OTHER THAN THE SPECIFIC PROJECT FOR WHICH THEY HAVE BEEN PREPARED AND DEVELOPED, WITHOUT THE WRITTEN CONSENT OF THE ARCHITECT. VISUAL CONTACT WITH THESE DRAWINGS OR SPECIFICATIONS SHALL CONSTITUTE CONCLUSIVE EVIDENCE OF ACCEPTANCE OF THESE RESTRICTIONS.

NO.	REVISIONS	DATE
01	PLAN CHECK REVISIONS	06/06/2016

LICENSED ARCHITECT
STEPHEN M. ALBERT
NO. C 9412
REN. 5-31-13
STATE OF CALIFORNIA

1833 N. GAREY AVE.

1833 NORTH GAREY AVENUE
PAMONA, CALIFORNIA 91767

APPROVALS

the albert group architects
2032 Stoner Ave | Los Angeles, CA 90025 310.820.8863

C.U.P NUMBER:

PROJECT NUMBER: 14130

PROJECT STATUS: PLAN CHECK RESUBMITTAL

ISSUE DATE: 07/18/2016

SHEET NUMBER: A0.02

of development street frontages to a condition "as good or better" as required per City Standard A-26-02.

50. All public water facilities located on private property must be installed within a City of Pomona easement of minimum 15-foot width, and will be maintained by the City. Applicant/Developer shall not place buildings, structures or trees on any related water easements, nor within 7 ½ feet of any City maintained water main without prior approval from the City.

51. Access to City water facilities for water operation crews shall be made available at all time for servicing and maintaining the water system and for reading water meters.

52. Easement rights shall hold the City harmless for removal and/or damage to the development improvements within easements during maintenance to, replacement of and/or operation of public water facilities.

53. Prior to the issuance of the Certificate of Occupancy Applicant/Developer is responsible for installing approved Reduced Pressure Backflow Preventers (list brand and model) for the following water lines to the site:

a) Reduced principal pressure devices are required for all domestic services;

b) Reduced principal pressure devices are required for all dedicated irrigation service lines to the proposed site;

c) Double check detector assembly devices for all fire sprinkler service lines.

54. Prior to the approval of the water improvement plans the Applicant/Developer shall meet all requirements of the Los Angeles County Fire Department (LACFD). Applicant/Developer shall contact LACFD to determine if additional fire hydrants are needed for the proposed development. Any new fire hydrants must be placed at least five (5) feet from proposed driveways and off of parking spaces. Proof of LACFD approval is required prior to the final water improvement plan submittal to the Public Works Department. Contact the LACFD for information at (909) 620-2402.

55. Prior to approval of project's improvement plans, the Applicant/Developer shall submit calculations of the expected wastewater generated by the proposed development, to properly size the sewer lateral(s) to serve the new site. Due to the additional discharge volume anticipated by this development, the applicant/developer shall conduct a flow meter study for the existing sewer main in South Garey Avenue. The flow test report for the existing manhole closest to the proposed point(s) of connection and the aforementioned calculations shall be submitted to the Water & Wastewater Operation Division (WWOD) for review and acceptance.

56. Prior to issuance of the building permit Applicant/Developer shall submit sewer improvement plans for review and approval by the Public Works Department. The sewer plans must include the following items:

a) The existing sewer infrastructure and applicable easements (min. 15 ft width):

i. One (1) eight-inch (8") VCP sewer main in Garey Avenue; all proposed sewer main onsite shall be privately maintained.

b) The Applicant/Developer shall connect to the existing (8") VCP main with a private VCP lateral.

c) The proposed sewer laterals with a profile and connection to the existing sewer laterals and sewer main.

d) The sewer lateral separation distances, relative to water mains, shall comply with California Code of Regulations, Title 22.

e) Construction Notes to include the following: The Contractor shall provide all temporary seals enclosures, forced ventilation or other devices as maybe necessary to prevent odor nuisance and solid objects from entering the existing sewer line during construction.

57. The sewer laterals from the public main to the site are considered private and shall be maintained by the property owners.

58. New sewer laterals must be constructed per Standard No. B-8-61 per City of Pomona Public Works Department Standard Drawings August 2011 (Public Works Standards). Construction shall also comply with Standard No. A-26-02 per the Public Works Standards.

59. Prior to the issuance of the building permit Applicant/Developer is responsible for the payment of all applicable City sewer connection fees and shall make proof of payment of the Los Angeles County Sanitation District fees associated with the proposed development.

60. Effective January 1, 2014, the City has adopted new service charges for water and sewer services. For further information on how charges are assessed, contact the City's Public Works Business Services Division at 909-620-2241. For information on meter installation fees contact the Public Works Department at (909) 620-2281.

61. If future placement of permanent structures conflicts with location of existing public utilities (water, sewer and storm drain), then improvement plans proposing the relocation or abandonment of identified utilities must be submitted, reviewed and accepted by the Public Works Department. No public utility infrastructure shall be removed or modified as part of the onsite demolition plan approved by the Building and Safety Department.

62. The final improvement plans, as shown on the Mylar, shall be provided to the City in both hard copy and electronic (AutoCAD v. 2010). Following construction and prior to acceptance of the improvements by the City, the project engineer shall provide hand drafted "AS BUILT" corrections on the original approved Mylars of the final constructed improvements to the satisfaction of the City Engineer. A corrected "AS BUILT" plan shall also be provided to the City in AutoCAD v. 2010 format.

63. Prior to issuance of the grading permit Applicant/Developer shall develop and obtain City approval of the final Standard Urban **Stormwater** Mitigation Plan (SUSMP) for the proposed project. The SUSMP shall be prepared in accordance with the City of Pomona's Low Impact Development (LID) Ordinance, the City of Pomona's Green Streets Policy and the Los Angeles Region NPDES MS4 Permit No. CAS004001, Order No. R4-2012-0175 which includes:

- Site Design BMPs;
- Source Control BMPs;
- Treatment Control BMPs

Utilize the County of Los Angeles Department of Public Works LID Standards Manual (Published February 2014) as a guidance document for the design of applicable BMPs proposed for your project.

Post-construction Structural and/or Treatment Control BMPs shall be designed to mitigate (infiltrate or harvest and use) storm water run-off from the 85th percentile, 24-hour rain event or 0.75-inch, 24-hour rain event, whichever is greater. The results of infiltration testing shall be provided as part of the SUSMP submittal.

The applicant shall implement Good Housekeeping Best Management Practices (BMPs) for the site to ensure that pollutants are not discharged to the municipal storm drain system during construction and throughout occupancy. An Erosion and Sediment Control Plan shall be submitted for review and approval.

64. Applicant / Developer shall prepare a Focused **Traffic** Impact Study and be responsible for the implementation of the study's recommendations regarding the access and circulation for the project site and the alley access from Garey Avenue. The study shall include, at the minimum, the analysis of:

a) The potential car queuing and storage capacity on northbound Garey Avenue traffic turning left into the alley, and

b) The sight distance at the existing skewed alley intersection with Garey Avenue.

65. Prior to issuance of the building permits applicant/developer is responsible for paying the project's **impact fees** for traffic signals and control devices, road and highway improvements, and public safety improvements.

66. The plans shall be submitted on 24" x 36" sheet size with a standard City title block, and must correctly identify the property owner, address, legal description, property lines, street centerline, curb-lines, existing and proposed utilities (water, sewer, and storm drain), utility easements, and the public right-of-way areas with dimensions.

Public Works Improvements Permit

All work in the public right-of-way and City easements is subject to review, approval, and permitting requirement of Public Works Department.

67. Prior to the issuance of the public improvement construction permits, Applicant/Developer shall post surety bonds for all public improvements, including but not limited to: water, sewer, storm drains, street frontage pavement, sidewalk, drainage and parkway improvements, traffic improvements and driveway approaches.

68. Permittee shall procure and maintain throughout the period of the Permit the following policies of insurance:

a) Commercial General Liability;

b) Automobile Liability;

c) Worker's Compensation as required by the State of California;

Note: The Commercial General Liability and the Automobile Liability policies shall include the City of Pomona as additional insured.

69. Permittee shall pay fees associated with and possess the City of Pomona Business License.

70. Changes and additions to the proposed work, including but not limited to detail plans for street improvement work, water plans and/or other work associated with this project and due to developer's or City's request shall require additional conditions to be completed by the applicant.

LOS ANGELES COUNTY FIRE DEPARTMENT – FIRE PREVENTION BUREAU

71. Submit two complete sets of architectural drawings. Indicate type of construction, occupancy classification, and area justification.

72. Provide a minimum unobstructed width of 28 feet, exclusive of shoulders, except for approved security gates in accordance with Section 503.6, and an unobstructed vertical clearance "clear to sky" Fire Department vehicular access to within 150 feet of all portions of the exterior walls of the first story of the building, as measured by an approved route around the exterior of the building when the height of the building above the lowest level of the Fire Department vehicular access road is more than 30 feet high, or the building is more than three stories. The access roadway shall be located a minimum of 15 feet and a maximum of 30 feet from the building, and shall be positioned parallel to one entire side of the building. The side of the building on which the aerial fire apparatus access road is positioned shall be approved by the fire code official. Fire Code 503.1.1 & 503.2.2. **NOTE: Alleys are not excepted as Fire Department Vehicular Access.**

73. Show all existing public fire hydrants (6"x4"x2-1/2") within 300 feet of lot frontage. Include size of barrel and outlets.

74. Provide a completed fire flow availability form. (Form 196).

75. The required fire flow for fire hydrants at this location is 3375 gpm, at 20 psi residual pressure, for a duration of 3 hours over and above maximum daily domestic demand. Fire Code 507.3 and Appendix B.

76. Additional requirements may be required pending information provided.

APPROVED BY:

[signature] 2/16/16

Mark Lazzaretto, Development and Neighborhood Services Director   Date

THE ABOVE DRAWINGS AND SPECIFICATIONS AND IDEAS, DESIGNS AND ARRANGEMENTS REPRESENTED THEREBY ARE AND SHALL REMAIN THE PROPERTY OF THE ARCHITECT AND NO PART THEREOF SHAL BE COPIED DISCLOSED TO OTHERS OR USED IN CONNECTION WITH ANY OTHER WORK OR PROJECT OTHER THAN THE SPECIFIC PROJECT FOR WHICH THEY HAVE BEEN PREPARED AND DEVELOPED, WITHOUT THE WRITTEN CONSENT OF THE ARCHITECT. VISUAL CONTACT WITH THESE DRAWINGS OR SPECIFICATIONS SHALL CONSTITUTE CONCLUSIVE EVIDENCE OF ACCEPTANCE OF THESE RESTRICTIONS.

NO.	REVISIONS	DATE
01	PLAN CHECK REVISIONS	06/06/2016

LICENSED ARCHITECT
STEPHEN M. ALBERT
NO. C 9412
REN. 5-31-13
STATE OF CALIFORNIA

1833 N. GAREY AVE.

1833 NORTH GAREY AVENUE
PAMONA, CALIFORNIA 91767

APPROVALS

the albert group architects
2032 Stoner Ave | Los Angeles, CA 90025 310.820.8863

C.U.P NUMBER:

PROJECT NUMBER: **14130**

PROJECT STATUS: **PLAN CHECK RESUBMITTAL**

ISSUE DATE: **07/18/2016**

SHEET NUMBER: **A0.03**

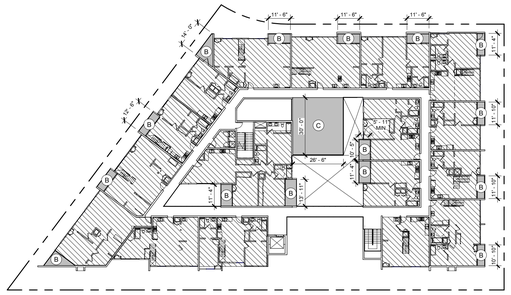

3RD FLOOR OPEN SPACE | SCALE: 1/32" = 1'-0" | 1

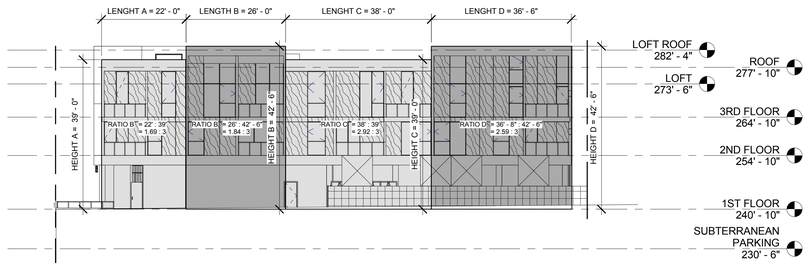

WEST BUILDING MASSING | SCALE: 1/16" = 1'-0" | 5

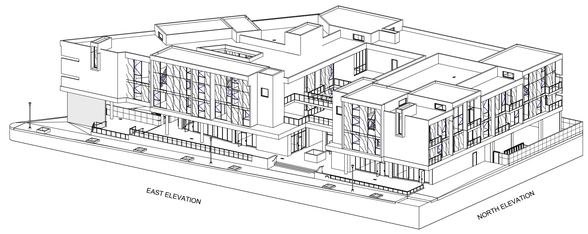

SE ISOMETRIC

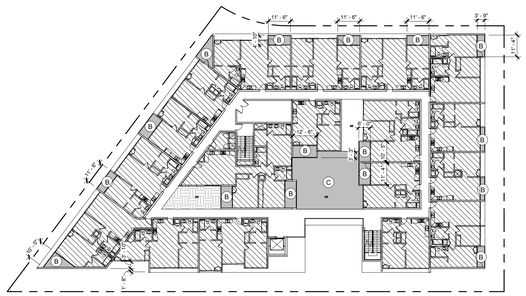

2ND FLOOR OPEN SPACE | SCALE: 1/32" = 1'-0" | 2

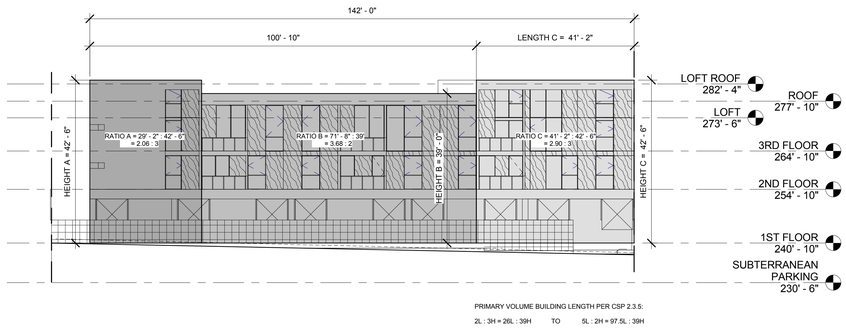

SOUTH BUILDING MASSING | SCALE: 1/16" = 1'-0" | 6

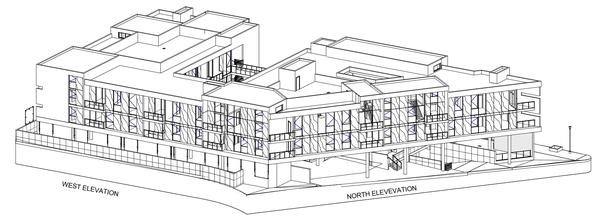

NW ISOMETRIC

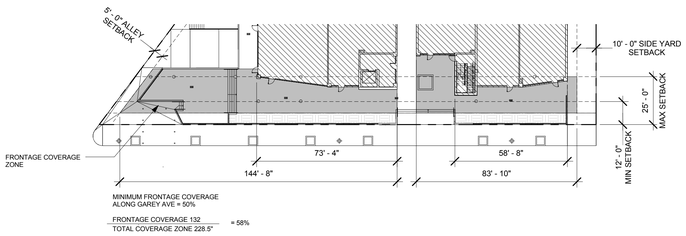

1ST FLOOR FRONTAGE | SCALE: 1/32" = 1'-0" | 3

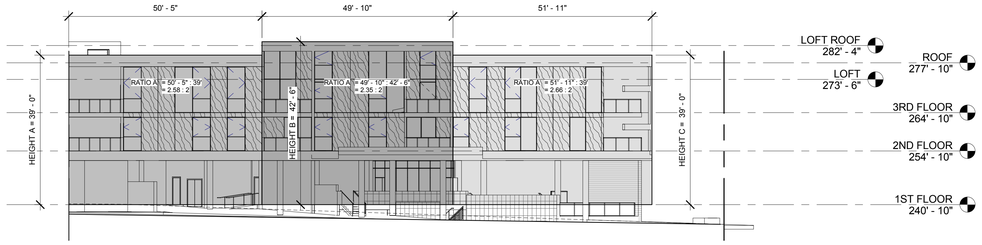

NORTH BUILDING MASSING | SCALE: 1/16" = 1'-0" | 7

PUBLIC OPEN SPACE REQUIRED

UNIT TYPE	REQ'D SF	PROPOSED UNITS	SUBTOTAL REQUIRED
RETAIL*	-		
RESIDENTIAL	150SF/UNIT	35 UNITS	5,250 SF
TOTAL PUBLIC OPEN SPACE REQUIRED			5,250 SF

*RETAIL PUBLIC SPACE IS ONLY FOR DEVELOPMENT OVER 20,000 SF OF RETAIL BUILDING AREA

PRIVATE OPEN SPACE REQUIRED

UNIT TYPE	REQ'D SF	PROPOSED UNITS	SUBTOTAL REQUIRED
RESIDENTIAL	60SF/UNIT	35 UNITS	2,100SF
TOTAL PRIVATE OPEN SPACE REQUIRED			2,100 SF

OPEN SPACE PROVIDED

FLOOR LEVEL	SUBTOTAL PUBLIC	SUBTOTAL PRIVATE
FIRST FLOOR	6,922 SF	-
SECOND FLOOR	-	1,952 SF
THIRD FLOOR	-	1,690 SF
TOTAL PRIVATE OPEN SPACE PROVIDED		3,642 SF
TOTAL PUBLIC OPEN SPACE PROVIDED	6,922 SF	

OPEN SPACE LEGEND

(B) PRIVATE BALCONY, PRIVATE OPEN SPACE TYPE PER POMONA CORRIDOR SPECIFIC PLAN 2.6.5 E.

(C) PRIVATE COURTYARD, PRIVATE OPEN SPACE TYPE PER POMONA CORRIDOR SPECIFIC PLAN 2.6.5 A.

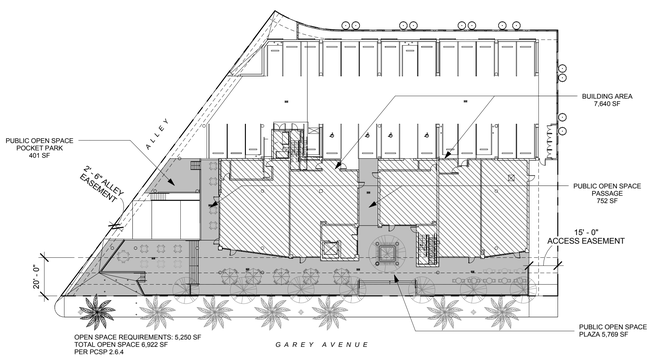

1ST FLOOR OPEN SPACE | SCALE: 1/32" = 1'-0" | 4

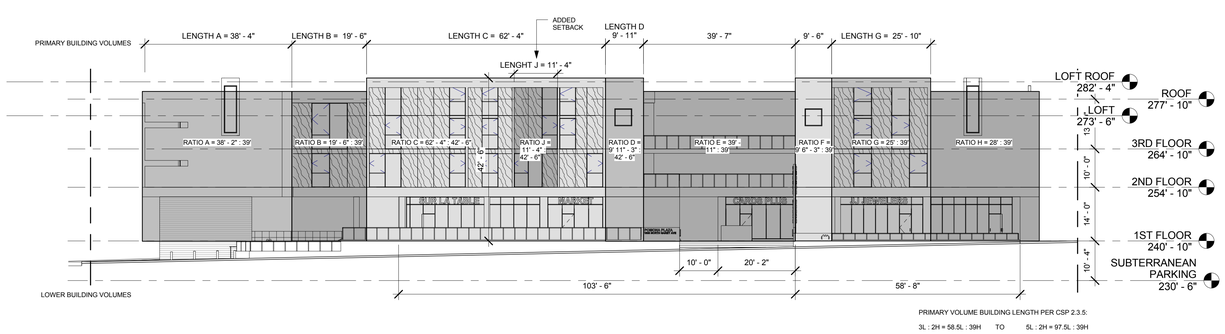

EAST BUILDING / GAREY AVE MASSING | SCALE: 1/16" = 1'-0" | 8

THE ABOVE DRAWINGS AND SPECIFICATIONS AND DESIGNS SHOWN THEREON AND REPRESENTED THEREBY ARE AND SHALL REMAIN THE PROPERTY OF THE ARCHITECT AND NO PART THEREOF SHALL BE USED FOR ANY PURPOSE NOT OR USED IN CONNECTION WITH ANY OTHER WORK OR PROJECT OTHER THAN THE SPECIFIC PROJECT FOR WHICH THEY HAVE BEEN PREPARED AND DEVELOPED, WITHOUT THE WRITTEN CONSENT OF THE ARCHITECT. VISUAL CONTACT WITH THESE DRAWINGS AND SPECIFICATIONS SHALL CONSTITUTE CONCLUSIVE EVIDENCE OF ACCEPTANCE OF THESE RESTRICTIONS.

NO.	REVISIONS	DATE
01	PLAN CHECK REVISIONS	06/06/2016

LICENSED ARCHITECT
STEPHEN M. ALBERT
NO. C 9412
REN. 5-31-13
STATE OF CALIFORNIA

1833 N. GAREY AVE.

1833 NORTH GAREY AVENUE
PAMONA, CALIFORNIA 91767

CODE COMPLIANCE

the albert group architects
24332 Steiner Ave | Los Angeles, CA 90023 310.939.8555

C.U.P NUMBER:

PROJECT NUMBER: 14130

PROJECT STATUS: PLAN CHECK RESUBMITTAL

ISSUE DATE: 07/18/2016

SHEET NUMBER: A0.11

FIRE BARRIER AND RESISTANCE REQUIREMENTS

FIRE-BARRIERS / FIRE-PARTITIONS AND OPENING PROTECTION REQUIREMENTS

FOR TYPE IB, AND VB FULLY SPRINKLERED (NPFA-13) CONSTRUCTION

LOCATION	REF CODE SECTION	FIRE BARRIER RATING	HORIZONTAL SEPERATION	OPENING PROTECTION
BETWEEN M & S-2 OCCUPANCY	TABLE 508.4	1 HR FIRE BARRIER	1 HR	3/4 HR
BETWEEN R-2 & S-2 OCCUPANCY	TABLE 508.4	1 HR FIRE BARRIER	1 HR	1 HR
BETWEEN R-2 & M OCCUPANCY	TABLE 508.4	1 HR FIRE BARRIER		
BETWEEN DWELLING UNITS	SECTION 709.3	1/2 HR FIRE PARTITION	1/2 HR	N/A
BETWEEN EGRESS BALCONY & INT	SECTION 109.2	0	0	0
ELEVATOR SHAFT	SECTION 708.4	2 HR FIRE BARRIER	0	1-1/2 HR
ELEVATOR LOBBY [1,2]	SECTION 708.4	2 HR FIRE BARRIER	0	1-1/2 HR
R-2 OCCUPANCY & STAIR 1,2	SECTION 1022	2 HR FIRE BARRIER	1 HR	N/A
R-2 OCCUPANCY & STAIR 3	SECTION 1026	EXTERIOR STAIRWAYS	N/A	N/A
R-2 OCCUPANCY & TRASH ENCL.	SECTION 1022	1 HR FIRE BARRIER		
S-2 OCCUPANCY & STAIR 1,2	SECTION 1022	2 HR FIRE BARRIER	1 HR	1 HR
S-2 OCCUPANCY & STAIR 3	SECTION 1022	1 HR FIRE BARRIER	1 HR	1 HR

FIRE RESISTANCE REQUIREMENTS FOR EXTERIOR WALLS (TABLE 602) FOR R-3 OCCUPANCY

LOCATION OF EXTERIOR WALL	TYPE OF CONSTRUCTION	FIRE SEPERATION DISTANCE	FIRE RESIS-TANCE REQ'S
NORTH WALL	IB VB	X ≥ 30' 10' ≤ X ≤ 30'	0 1 HOUR
SOUTH WALL	IB VB	X ≥ 30'	0 0
SOUTH COURTYARD WALL	VB	X ≥ 30'	0
WEST WALL	IB VB	10' ≤ X ≤ 30' 10' ≤ X ≤ 30'	1 HOUR 1 HOUR
WEST COURTYARD WALL	VB	10' ≤ X ≤ 30'	1 HOUR
EAST WALL	IB VB	X ≥ 30' 10' ≤ X ≤ 30'	0 1 HOUR
EAST COURTYARD WALL	VB	X ≥ 30'	0

1 PER SECTION 708.14.1, EXCEPTION 1, ENCLOSED ELEVATOR LOBBIES ARE NOT REQUIRED AT THE STREET FLOOR PROVIDED THAT THE ENTIRE STREET FLOOR IS EQUIPPED WITH AUTOMATIC SPRINKLER SYSTEM IN ACCORDANCE WITH SECTION 903.3.1.1 OR 903.3.1.2..

2 PER SECTION 708.14.1, EXCEPTION 5, SMOKE PARTITIONS SHALL BE PERMITTED IN LIEU OF FIRE PARTITIONS TO SEPERATE THE ELEVATOR LOBBY AT EACH FLOOR WHERE THE BUILDING IS EQUIPPED WITH AN AUTOMATIC SPRINKLER SYSTEM INSTALLED IN ACCORDANCE WITH 903.3.1.1 OR 903.3.1.2.

FIRE RESISTANCE RATING REQUIREMENTS FOR BUILDING ELEMENTS (TABLE 601)

BUILDING ELEMENT	TYPE IB	TYPE VB
PRIMARY STRUCTURAL FRAME	2 HRS	0
BEARING WALLS EXTERIOR INTERIOR	 2 HRS 2 HRS	 0 0
FLOOR CONSTRUCTION	2 HRS	0
ROOF CONSTRUCTION AND SECONDARY MEMBERS	1 HR	0

CODE COMPLIANCE GENERAL NOTES

EGRESS & ADA

1. MAXIMUM EXIT ACCESS TRAVEL DISTANCE FOR R-2 OCCUPANCY, PER TABLE 1016.1, IS 250' WITH AN AUTOMATIC SPRINKLER SYSTEM
2. MAXIMUM EXIT ACCESS TRAVEL DISTANCE FOR S-2 OCCUPANCY, PER TABLE 1016.1, IS 400' WITH AN AUTOMATIC SPRINKLER SYSTEM
3. NOTED STAIR WIDTHS ARE TAKEN FROM INSIDE OF STRINGER TO INSIDE OF STRINGER, NOT THE CLEAR WIDTH BETWEEN HANDRAILS, TYPICAL UNLESS OTHER NOTED.ALL PORTIONS OF THE MEANS OF EGRESS SHALL COMPLY WITH SECTION 1003 OF THE 2010 CBC.
4. REGARDLESS OF THE OCCUPANT LOAD SERVED, ALL EXIT DOORS SHALL BE OPERABLE FROM THE INSIDE WITHOUT THE USE OF A KEY OR SPECIAL KNOWLEDGE.
5. CONTRACTOR SHALL CHALK OUT ALL NON-BEARING WALLS PRIOR TO FRAMING AND CONTACT OWNER/ARCHITECT FOR FIELD INSPECTION OF ADA CLEARANCES PRIOR TO FRAMING.
6. ALL DOORS TO BE A MINIMUM OF 3'-0" WIDE x 6'-8" HIGH MINIMUM (U.O.N., SEE PLANS FOR LARGER EGRESS WIDTHS) EGRESS DOOR, SEE SCHEDULE FOR FURTHER INFORMATION (HEIGHTS AND WIDTHS MAY VARY).
7. ALONG EGRESS PATH, MAINTAIN 44" MINIMUM WIDTH AT INTERIOR AND 48" MINIMUM AT EXTERIOR (U.O.N. FOR LARGER OCCUPANT LOADS) CLEAR WIDTH x 7'-6" MIN. CLEAR VERTICAL CLEARANCE CONTINUOUS.
8. PANIC HARDWARE SHALL BE INSTALLED ON ALL DOORS OPENING IN THE DIRECTION OF EGRESS TRAVEL.
9. THE SEPERATION DISTANCE OF THE EXIT DOORS OR EXIT ACCESS DOORWAYS SHALL NOT BE LESS THAN ONE THIRD OF THE LENGTH OF THE MAXIMUM OVERALL DIAGONAL DIMENSION OF THE AREAS SERVED, PER SECTION 1015.2.1 OF 2012 CBC, EXCEPTION 2.
10. ALL EGRESS STAIRS ARE SIZED TO ACCOMODATE HALF OF THE TOTAL FLOOR LOAD PER CODE SECTION 1005.1.
11. TACTILE EXIT SIGNS SHALL BE POSTED AT ALL EGRESS DOORS.

THE ABOVE DRAWINGS AND SPECIFICATIONS AND IDEAS, DESIGNS AND ARRANGEMENTS REPRESENTED THEREBY ARE AND SHALL REMAIN THE PROPERTY OF THE ARCHITECT AND NO PART THEREOF SHAL BE COPIED DISCLOSED TO OTHERS OR USED IN CONNECTION WITH ANY OTHER WORK OR PROJECT OTHER THAN THE SPECIFIC PROJECT FOR WHICH THEY HAVE BEEN PREPARED AND DEVELOPED, WITHOUT THE WRITTEN CONSENT OF THE ARCHITECT. VISUAL CONTACT WITH THESE DRAWINGS OR SPECIFICATIONS SHALL CONSTITUTE CONCLUSIVE EVIDENCE OF ACCEPTANCE OF THESE RESTRICTIONS.

NO.	REVISIONS	DATE
01	PLAN CHECK REVISIONS	06/06/2016

LICENSED ARCHITECT STEPHEN M. ALBERT NO. C 9412 REN. 5-31-13 STATE OF CALIFORNIA

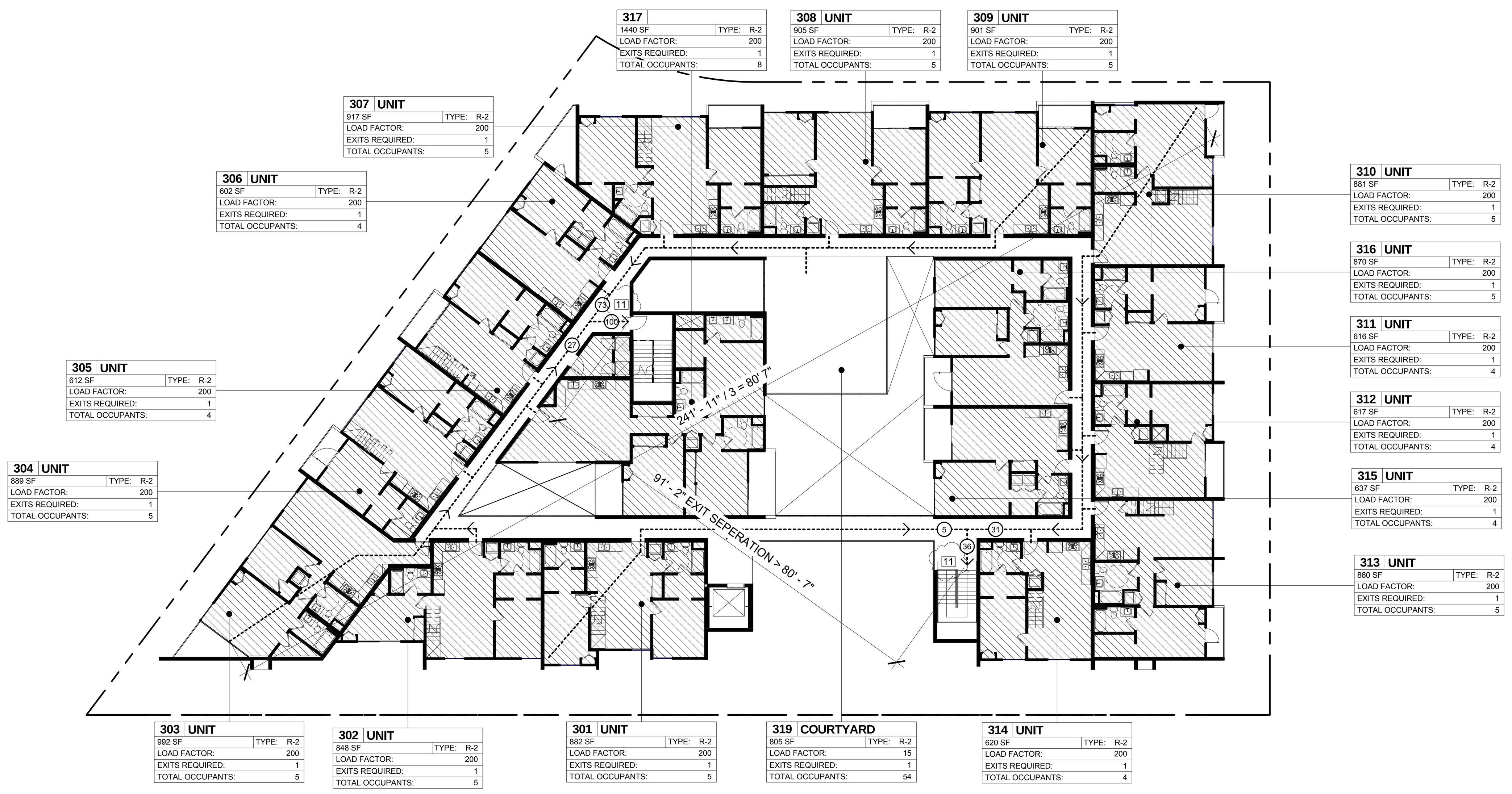

3RD FLOOR SCALE: 1" = 20'-0" **1**

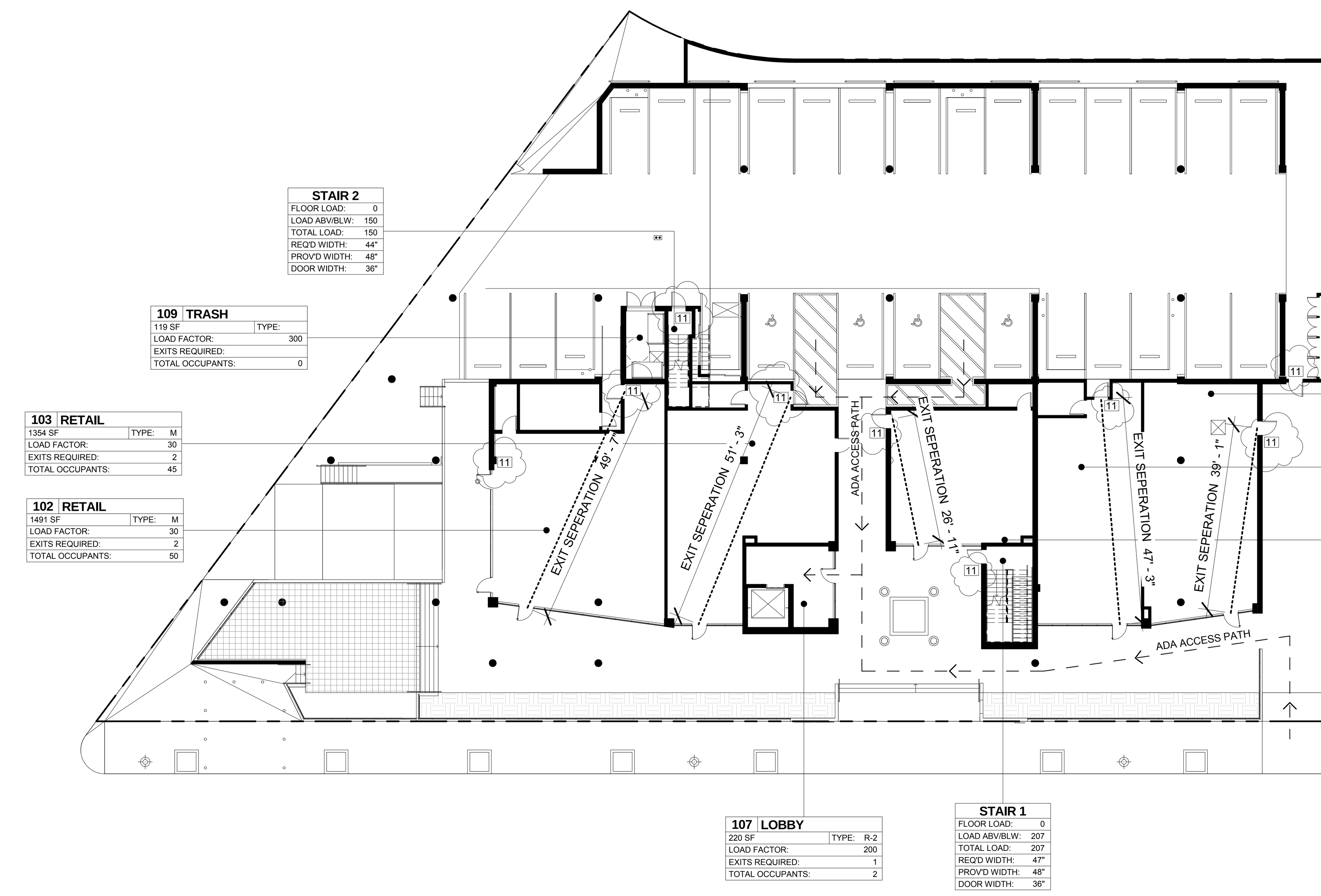

GROUND FLOOR SCALE: 1" = 20'-0" **3**

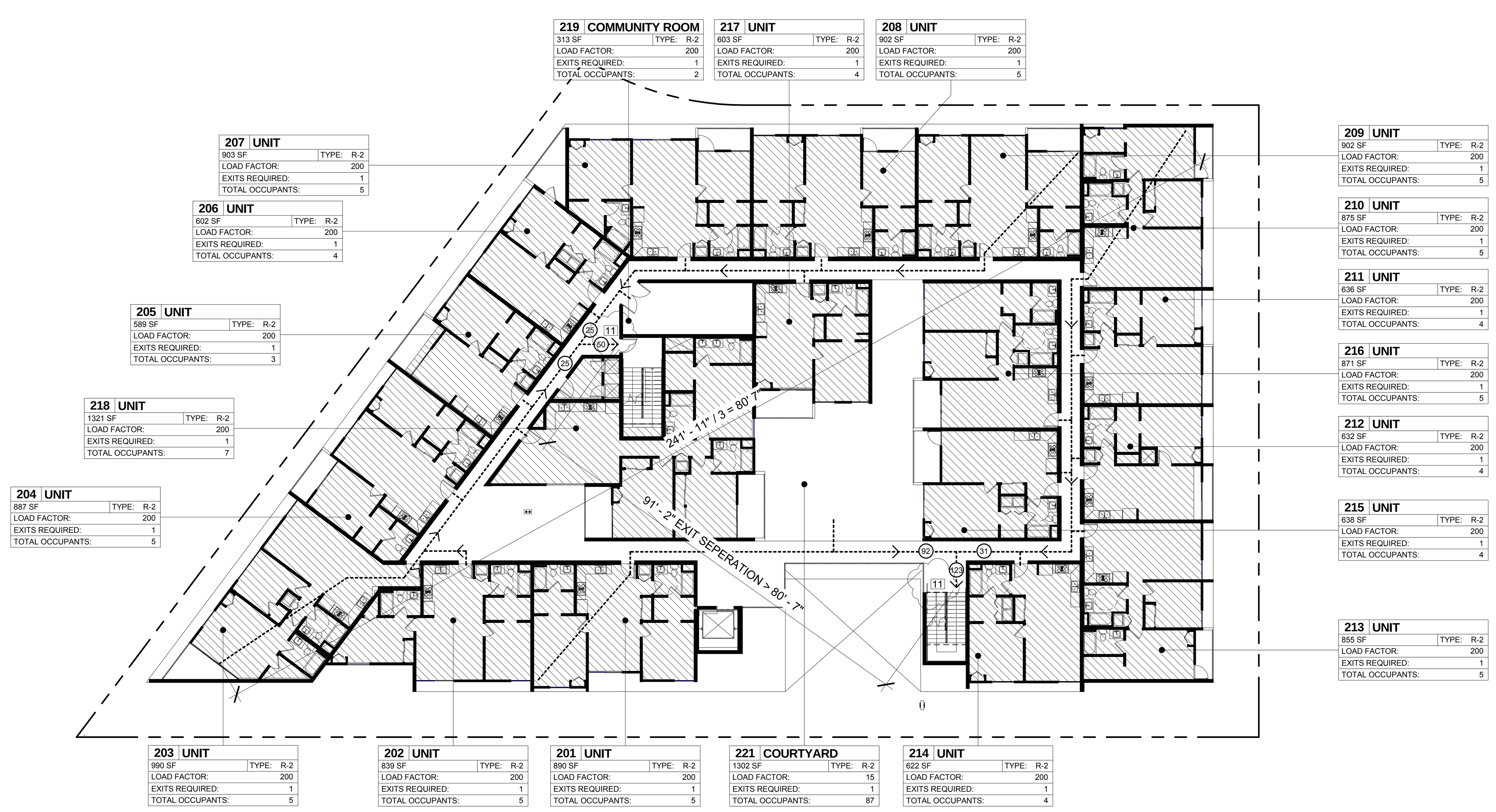

2ND FLOOR SCALE: 1" = 20'-0" **2**

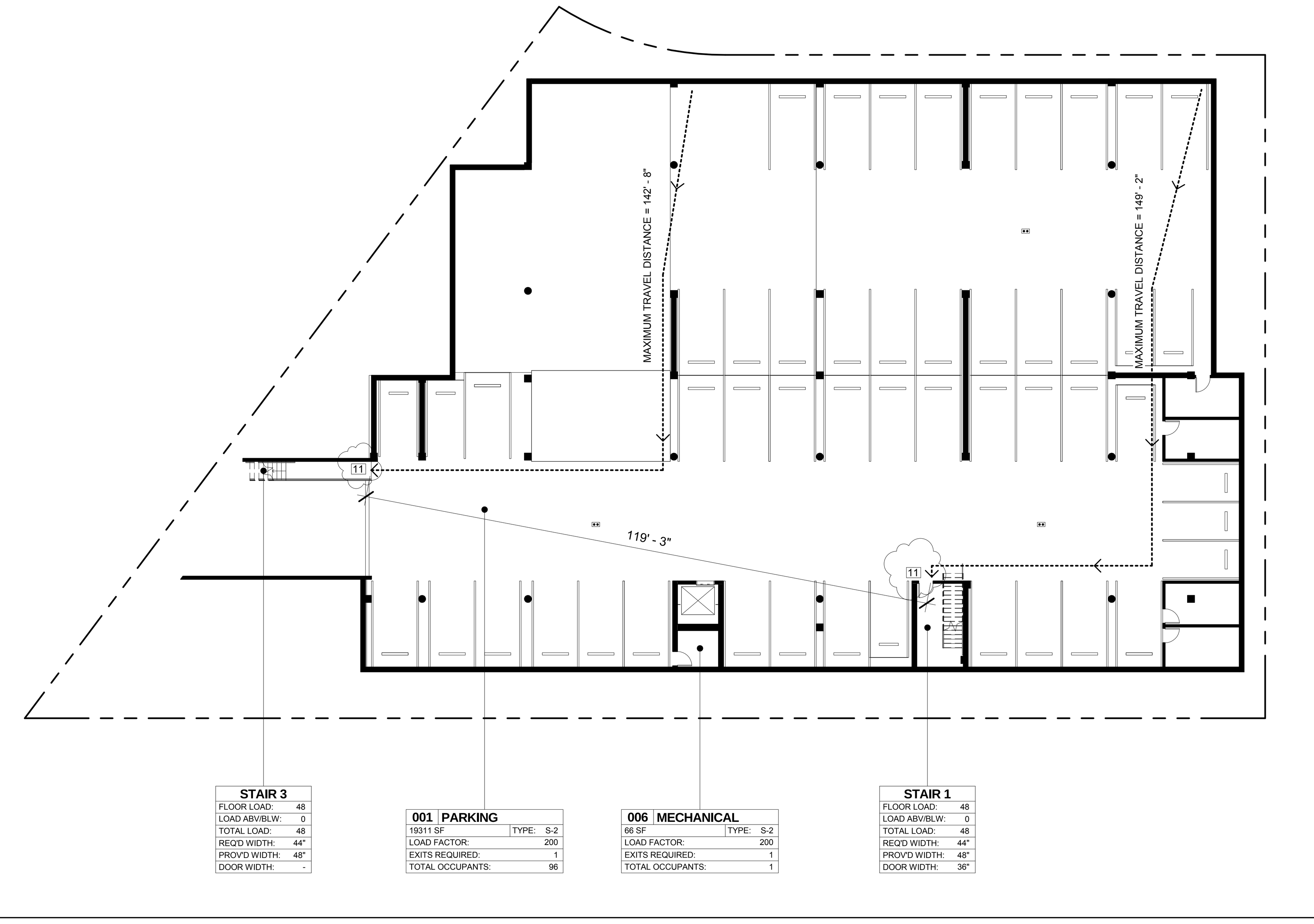

SUBTERRANEAN PARKING SCALE: 1" = 20'-0" **4**

1833 N. GAREY AVE.

1833 NORTH GAREY AVENUE
PAMONA, CALIFORNIA 91767

CODE COMPLIANCE

the albert group architects
2032 Stoner Ave | Los Angeles, CA 90025 310.820.8863

C.U.P NUMBER:

PROJECT NUMBER: 14130

PROJECT STATUS: PLAN CHECK RESUBMITTAL

ISSUE DATE: 07/18/2016

SHEET NUMBER: **A0.12**

OPEN AREA NOTES

THE MAXIMUM AREA OF UNPROTECTED AND PROTECTED OPENINGS PERMITTED IN AN EXTERIOR WALL IN ANY STORY OF A BUILDING SHALL NOT EXCEED THE PERCENTAGES SPECIFIED IN TABLE 705.8.
EXCEPTIONS:
1. IN OTHER THAN GROUP H OCCUPANCIES, UNLIMITED UNPROTECTED OPENINGS ARE PERMITTED IN THE FIRST STORY ABOVE GRADE PLANE EITHER:
1.1. WHERE THE WALL FACES A STREET AND HAS A FIRE SEPARATION DISTANCE OF MORE THAN 15 FEET (4572 MM); OR
1.2. WHERE THE WALL FACES AN UNOCCUPIED SPACE. THE UNOCCUPIED SPACE SHALL BE ON THE SAME LOT OR DEDICATED FOR PUBLIC USE, SHALL NOT BE LESS THAN 30 FEET (9144 MM) IN WIDTH AND SHALL HAVE ACCESS FROM A STREET BY A POSTED FIRE LANE IN ACCORDANCE WITH THE INTERNATIONAL FIRE CODE.
2. BUILDINGS WHOSE EXTERIOR BEARING WALLS, EXTERIOR NONBEARING WALLS AND EXTERIOR PRIMARY STRUCTURAL FRAME ARE NOT REQUIRED TO BE FIRE-RESISTANCE RATED SHALL BE PERMITTED TO HAVE UNLIMITED UNPROTECTED OPENINGS.

UNPROTECTED OPENINGS
WHERE UNPROTECTED OPENINGS ARE PERMITTED, WINDOWS AND DOORS SHALL BE CONSTRUCTED OF ANY APPROVED MATERIALS. GLAZING SHALL CONFORM TO THE REQUIREMENTS OF CHAPTERS 24 AND 26.

VERTICAL SEPARATION OF OPENINGS
OPENINGS IN EXTERIOR WALLS IN ADJACENT STORIES SHALL BE SEPARATED VERTICALLY TO PROTECT AGAINST FIRE SPREAD ON THE EXTERIOR OF THE BUILDINGS WHERE THE OPENINGS ARE WITHIN 5 FEET (1524 MM) OF EACH OTHER HORIZONTALLY AND THE OPENING IN THE LOWER STORY IS NOT A PROTECTED OPENING WITH A FIRE PROTECTION RATING OF NOT LESS THAN 3/4 HOUR. SUCH OPENINGS SHALL BE SEPARATED VERTICALLY AT LEAST 3 FEET (914 MM) BY SPANDREL GIRDERS, EXTERIOR WALLS OR OTHER SIMILAR ASSEMBLIES THAT HAVE A FIRE-RESISTANCE RATING OF AT LEAST 1 HOUR OR BY FLAME BARRIERS THAT EXTEND HORIZONTALLY AT LEAST 30 INCHES (762 MM) BEYOND THE EXTERIOR WALL. FLAME BARRIERS SHALL ALSO HAVE A FIRE-RESISTANCE RATING OF AT LEAST 1 HOUR. THE UNEXPOSED SURFACE TEMPERATURE LIMITATIONS SPECIFIED IN ASTM E 119 OR UL 263 SHALL NOT APPLY TO THE FLAME BARRIERS OR VERTICAL SEPARATION UNLESS OTHERWISE REQUIRED BY THE PROVISIONS OF THIS CODE.
EXCEPTIONS:
1. THIS SECTION SHALL NOT APPLY TO BUILDINGS THAT ARE THREE STORIES OR LESS ABOVE GRADE PLANE.
2. THIS SECTION SHALL NOT APPLY TO BUILDINGS EQUIPPED THROUGHOUT WITH AN AUTOMATIC SPRINKLER SYSTEM IN ACCORDANCE WITH SECTION 903.3.1.1 OR 903.3.1.2.
3. OPEN PARKING GARAGES.

MAXIMUM OPEN AREA

(PER CBC TABLE 705.8)

10' TO LESS THAN 15'
ALLOWABLE
UNPROTECTED, SPRINKLERED: 45%
PROTECTED: 45%

15' TO LESS THAN 20'
ALLOWABLE
UNPROTECTED, SPRINKLERED: 75%
PROTECTED: 75%

20' TO LESS THAN 25'
ALLOWABLE
UNPROTECTED, SPRINKLERED: NO LIMIT
PROTECTED: NO LIMIT

PROTECTED OPENINGS

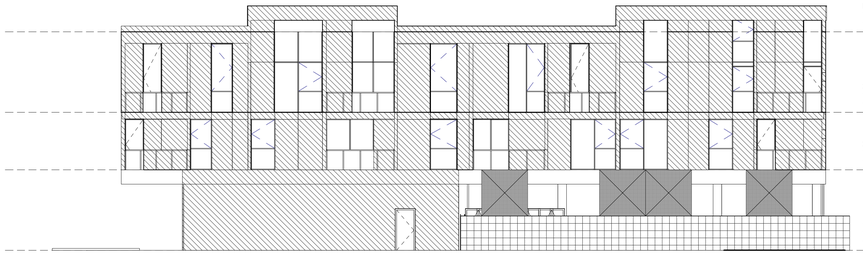

NORTH ELEVATION - OPEN AREA ANALYSIS | SCALE: 3/32" = 1'-0" | 1

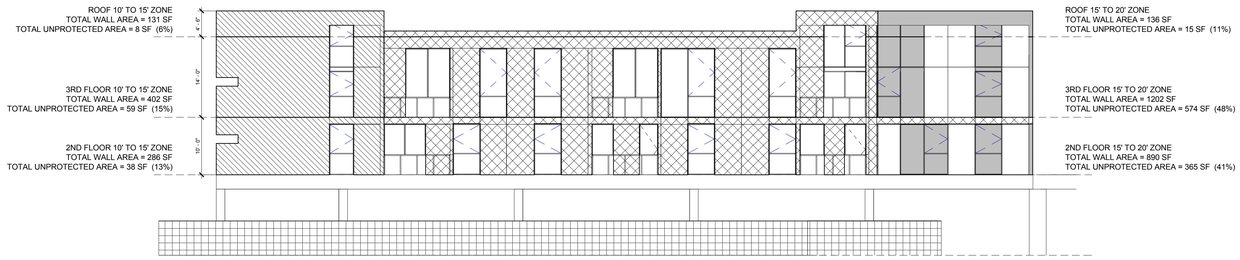

WEST ELEVATION - OPEN AREA ANALYSIS | SCALE: 3/32" = 1'-0" | 2

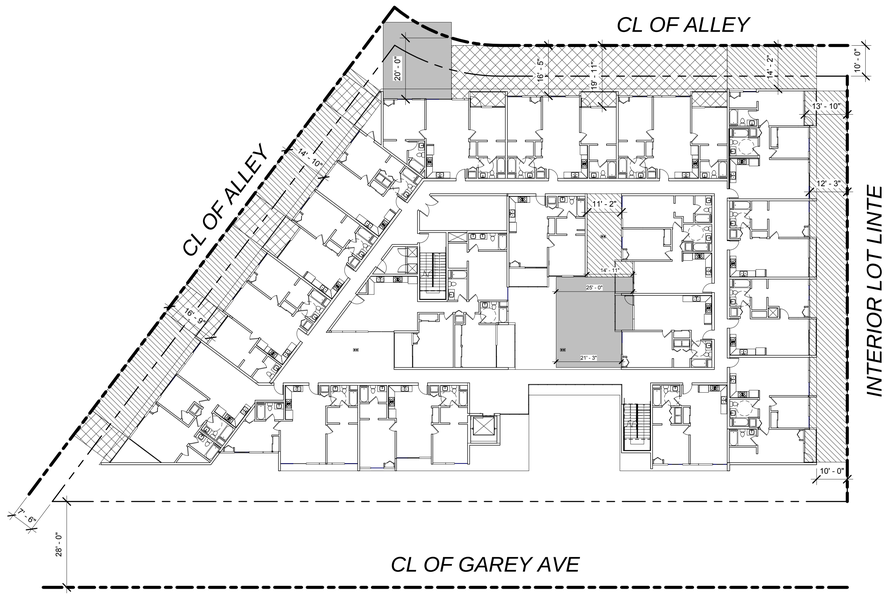

FIRE SEPARATION DISTANCE PLAN | SCALE: 1" = 20'-0" | 5

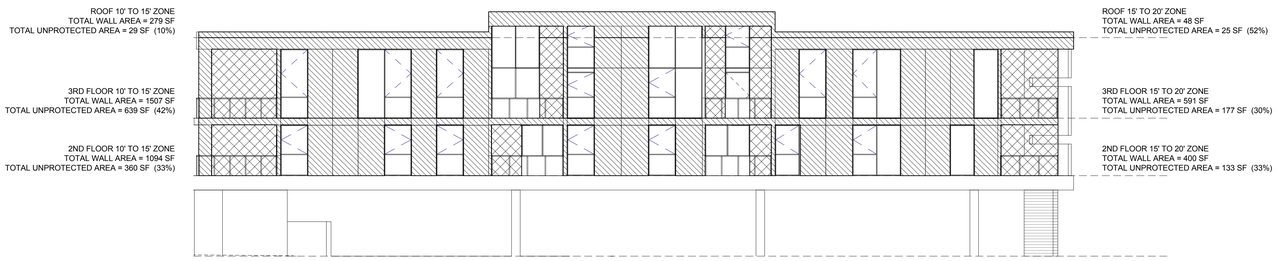

SOUTH ELEVATION - OPEN AREA ANALYSIS | SCALE: 3/32" = 1'-0" | 3

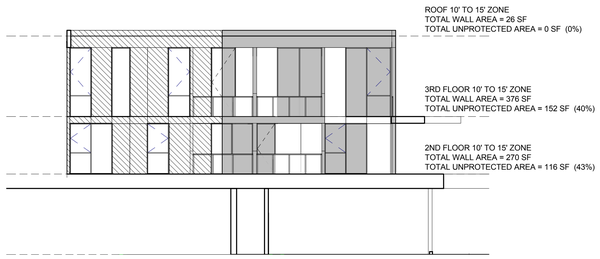

NORTH COURTYARD ELEVATION - OPEN AREA ANALYSIS | SCALE: 3/32" = 1'-0" | 4

THE ABOVE DRAWINGS AND SPECIFICATIONS AND REPORTS CONTAINED HEREIN ARE AND SHALL REMAIN THE PROPERTY OF THE ARCHITECT AND NO PART THEREOF SHALL BE USED FOR ANY OTHER WORK OR USED IN CONNECTION WITH ANY OTHER WORK OR PROJECT OTHER THAN THE SPECIFIC PROJECT FOR WHICH THEY HAVE BEEN PREPARED AND DEVELOPED, WITHOUT THE WRITTEN CONSENT OF THE ARCHITECT. VISUAL CONTACT WITH THESE DRAWINGS AND SPECIFICATIONS SHALL CONSTITUTE CONCLUSIVE EVIDENCE OF ACCEPTANCE OF THESE RESTRICTIONS.

NO.	REVISIONS	DATE
01	PLAN CHECK REVISIONS	06/06/2016

LICENSED ARCHITECT
STEPHEN M. ALBERT
NO. C 9412
REN. 5-31-13
STATE OF CALIFORNIA

1833 N. GAREY AVE.

1833 NORTH GAREY AVENUE
PAMONA, CALIFORNIA 91767

CODE COMPLIANCE

the albert group architects
2032 Stoner Ave | Los Angeles, CA 90025 310.575.8565

C.U.P NUMBER:

PROJECT NUMBER: 14130

PROJECT STATUS: PLAN CHECK RESUBMITTAL

ISSUE DATE: 07/18/2016

SHEET NUMBER: A0.13

GRADING NOTES

1. ALL WORK SHALL BE IN ACCORDANCE WITH THE CITY OF POMONA ORDINANCE NO. 3444, AND THE LATEST STATE CODES AS MANDATED TO BE ENFORCED BY THE CITY AND THE STANDARD SPECIFICATIONS FOR PUBLIC WORKS CONSTRUCTION, LATEST EDITION, PLUS ANY SUPPLEMENTS. A BOND IS REQUIRED PER SECTION 3311 OF THE UNIFORM BUILDING CODE.
2. AN APPROVED SET OF PLANS SHALL BE ON THE JOB SITE AT ALL TIMES.
3. NO WORK SHALL BE STARTED WITHOUT FIRST NOTIFYING THE BUILDING DIVISION AT (909) 620–2422.
4. ADEQUATE BARRICADES, LIGHTS, FLAG MEN, SIGNS AND OTHER SAFETY DEVICES SHALL BE PROVIDED AS SPECIFIED BY THE TRAFFIC MANUAL PUBLISHED BY THE STATE OF CALIFORNIA DEPARTMENT OF TRANSPORTATION.
5. EXISTING CITY STREETS SHALL BE KEPT CLEAN OF ALL MATERIALS RESULTING FROM THE GRADING OPERATIONS. THE STREET RIGHT–OF–WAY SHALL BE CLEANED UP DAILY AND AS NECESSARY TO MAINTAIN PEDESTRIAN AND VEHICULAR PASSAGE OVER THE PUBLIC RIGHT–OF–WAY AT ALL TIMES.
6. THE PERMITTEE OR HIS AGENT SHALL NOTIFY THE BUILDING OFFICIAL AT LEAST 24 HOURS BEFORE THE GRADING OPERATION IS READY FOR EACH OF THE FOLLOWING:
   - A. PRE–GRADE MEETING: WHEN THE PERMITTEE IS READY TO BEGIN WORK AND BEFORE ANY GRADING OR BRUSHING IS STARTED. THE FOLLOWING PEOPLE MUST BE PRESENT – OWNER, GRADING CONTRACTOR, DESIGN CIVIL ENGINEER, SOILS ENGINEER, GEOLOGIST, BUILDING OFFICIAL OR THEIR REPRESENTATIVE.
   - B. TOE INSPECTION: AFTER THE NATURAL GROUND IS EXPOSED AND PREPARED TO RECEIVE FILL AND BEFORE ANY FILL IS PLACED.
   - C. EXCAVATION INSPECTION: AFTER THE EXCAVATION IS STARTED AND BEFORE THE DEPTH OF EXCAVATION EXCEEDS 10 FEET.
   - D. FILL INSPECTION: AFTER THE AREA TO RECEIVE FILL HAS BEEN PREPARED AND INSPECTED BY THE SOILS ENGINEER.
   - E. DRAINAGE DEVICE INSPECTION: AFTER FORMS, STEEL AND PIPE ARE IN PLACE, AND BEFORE ANY CONCRETE IS POURED.
   - F. ROUGH GRADING: WHEN ALL ROUGH GRADING HAS BEEN COMPLETED.
   - G. FINAL INSPECTION: WHEN ALL WORK INCLUDING INSTALLATION OF ALL DRAINAGE STRUCTURES AND OTHER PROTECTIVE DEVICES HAS BEEN COMPLETED AND THE "AS–GRADED" PLAN AND REQUIRED REPORTS HAVE BEEN SUBMITTED AND APPROVED.

   THE PERMITTEE SHALL WAIT FOR APPROVAL BY THE INSPECTOR BEFORE PROCEEDING WITH THE WORK.
7. SUFFICIENT TESTS OF SOIL PROPERTIES, INCLUDING SOIL TYPES AND SHEAR STRENGTH SHALL BE MADE DURING GRADING OPERATIONS TO VERIFY COMPLIANCE WITH DESIGN CRITERIA. THE RESULTS OF SUCH TESTING SHALL BE FURNISHED TO THE BUILDING OFFICIAL UPON COMPLETION OF GRADING OPERATIONS OR WHEN NECESSITATED BY FIELD CONDITIONS UPON REQUEST OF THE BUILDING OFFICIAL.
8. THE GRADING CONTRACTOR SHALL SUBMIT A WRITTEN STATEMENT VERIFYING THAT WORK DONE UNDER HIS DIRECTION WAS PERFORMED IN ACCORDANCE WITH THE APPROVED PLANS AND REQUIREMENTS OF CHAPTER 33 OF THE UNIFORM BUILDING CODE OR DESCRIBING VARIANCES FROM THE APPROVED PLANS AND REQUIREMENTS OF THE CODE.
9. THE LOCATION AND PROTECTION OF ALL UTILITIES IS THE RESPONSIBILITY OF THE PERMITTEE.
10. DUST SHALL BE CONTROLLED BY WATERING.
11. SANITARY FACILITIES SHALL BE MAINTAINED ON THE SITE FROM BEGINNING TO COMPLETION OF GRADING OPERATIONS.
12. ALL GRADING SHALL CONFORM TO THE RECOMMENDATIONS IN THE APPROVED GEOTECHNICAL REPORT BY: GEOTECHNOLOGIES, INC., DATED: JANUARY 19, 2006, ADDRESS: 439 WESTERN AVENUE, GLENDALE CALIFORNIA 91201, TEL: (818)240–9600 FAX: (818)240–9675
13. THE CONTRACTOR SHALL INCORPORATE EROSION CONTROL MEASURES TO BE USED DURING AND AFTER CONSTRUCTION. SEPARATE PLANS FOR DRAINAGE AND EROSION CONTROL MEASURES TO BE USED DURING AND AFTER CONSTUCTION ARE TO BE IN COMPLIANCE WITH ALL APPLICABLE STORM WATER POLLUTION REQUIREMENTS.
14. THE ENGINEERING GEOLOGIST SHALL INSPECT AND AOOROVE ALL CUT SLOPE.
15. PRIOR TO ISSUANCE OF THE BUILDING PERMITS, A SOIL EXPANSION TEST PERFORMED IN ACCORDANCE WITH THE PROCEDURES OF UNIFORM BUILDING CODE STANDARD NO. 18–2 IS REQUIRED.
16. PRIOR TO PLACING COMPACTED FILL, THE SURFACE SHALL BE STRIPPED OF VEGETATION AND THE SURFACE SCARIFIED TO A DEPTH OF 12 INCHES OR AS SPECIFIED BY THE SOILS ENGINEER AND APPROVED BY THE BUILDING OFFICIAL, BROUGHT TO OPTIMUM MOISTURE CONTENT, RECOMPACTED TO 90% MAXIMUM DENSITY AND INSPECTED BY THE GRADING INSPECTOR AND THE SOIL TESTING AGENCY.
17. CUT SLOPES SHALL BE NO STEEPER THAN 2 HORIZONTAL TO 1 VERTICAL. UNLESS; "SHORING & LAGGING".
18. FILLS SHALL BE COMPACTED THROUGHOUT TO 90% OF MAXIMUM DENSITY AS DETERMINED BY UNIFORM BUILDING CODE NO. 3313, LATEST EDITION ADOPTED BY THE CITY, AND CERTIFIED BY THE SOILS ENGINEER. NOT LESS THAN ONE FIELD DENSITY TEST WILL BE MADE FOR EACH 2 FEET VERTICAL LIFT OF FILL NOR LESS THAN ONE SUCH TEST FOR EACH 1,000 CUBIC YARDS OF MATERIAL PLACED. AT LEAST ONE–HALF OR THE REQUIRED TESTS SHALL BE MADE AT THE LOCATION OF THE FINAL FILL SLOPE.
19. FILL SLOPES SHALL BE NO STEEPER THAN 2 HORIZONTAL TO 1 VERTICAL AND SHALL BE COMPACTED TO NOT LESS THAN 90% OF MAXIMUM DENSITY OUT TO THE FINISHED SURFACE. ALL FILL SLOPES GREATER THAN 5 FEET IN VERTICAL HEIGHT SHALL BE GRID ROLLED TO COMPACT THE OUTER 6" TO 8" TO AT LEAST 90% OF MAXIMUM DENSITY.
20. NO ROCK OR SIMILAR MATERIAL GREATER THAN 12 INCHES IN DIMENSION WILL BE PLACED IN THE FILL UNLESS RECOMMENDATIONS FOR SUCH PLACEMENT HAVE BEEN SUBMITTED BY THE SOILS ENGINEER IN ADVANCE AND APPROVED BY THE BUILDING OFFICIAL.
21. NO FILL SHALL BE PLACED UNTIL STRIPPING OF VEGETATION, REMOVAL OF UNSUITABLE SOILS AND INSTALLATION OF SUBDRAINS (IF REQUIRED) HAVE BEEN INSPECTED AND APPROVED BY THE SOILS ENGINEER AND THE SITE INSPECTOR.
22. CONTINUOUS INSPECTION BY THE SOILS ENGINEER OR HIS RESPONSIBLE REPRESENTATIVE WILL BE PROVIDED DURING ALL FILL PLACEMENT AND COMPACTION OPERATIONS.
23. THE SOILS ENGINEER AND BUILDING OFFICIAL SHALL APPROVE ALL EXISTING FILLS OR HIS REPRESENTATIVE BEFORE ANY ADDITIONAL FILLS ARE ADDED.
24. ALL TRENCH BACKFILLS SHALL BE TESTED AND CERTIFIED BY THE SOILS ENGINEER.
25. ALL CONCRETE STRUCTURES THAT COME IN CONTACT WITH THE ONSITE SOILS SHALL BE CONSTRUCTED WITH TYPE 5 SIX(6) SACK CEMENT UNLESS SULFATE CONTENT TESTS CONDUCTED BY THE SOILS ENGINEER SHOW IT TO BE UNNECESSARY.
26. THE CIVIL ENGINEER SHALL PROVIDE PROFESSIONAL INSPECTION WITHIN SUCH ENGINEER'S AREA OF TECHNICAL SPECIALTY, WHICH SHALL CONSIST OF OBSER–VATION AND REVIEW AS TO THE ESTABLISHMENT OF LINE, GRADE AND SURFACE DRAINAGE OF THE DEVELOPMENT AREA. IF REVISED PLANS ARE REQUIRED DURING THE COURSE OF THE WORK THEY SHALL BE PREPARED BY THE CIVIL ENGINEER.
27. THE SOILS ENGINEER SHALL PROVIDE SUFFICIENT INSPECTION DURING THE PREPARATION OF NATURAL GROUND AND PLACEMENT OF COMPACTION TO VERIFY THAT SUCH WORK IS BEING PERFORMED IN ACCORDANCE WITH THE CONDITIONS OF THE APPROVED PLAN AND THE REQUIREMENTS OF THE UNIFORM BUILDING CODE SECTION 3317.3, LATEST EDITION ADOPTED BY THE CITY. REVISED RECOM–MENDATIONS RELATING TO CONDITIONS DIFFERING FROM THE APPROVED SOILS ENGINEERING REPORT SHALL BE SUBMITTED TO THE PERMITTEE, THE BUILDING OFFICIAL, AND THE CIVIL ENGINEER.
28. THE ENGINEERING GEOLOGIST SHALL PROVIDE A PROFESSIONAL INSPECTION OF BEDROCK EXCAVATION TO DETERMINE IF CONDITIONS ENCOUNTERED ARE IN ACCORDANCE WITH THE APPROVED REPORTS, THE PLANS, SPECIFICATIONS, AND CODE WITHIN THEIR PURVIEW, IN ACCORDANCE WITH THE UNIFORM BUILDING CODE SECTION 3317.4, LATEST EDITION ADOPTED BY THE CITY.
29. THE PERMITTEE SHALL BE RESPONSIBLE FOR THE WORK TO BE PERFORMED IN ACCORDANCE WITH THE APPROVED PLANS AND SPECIFICATIONS AND IN CONFORMANCE WITH THE PROVISIONS OF THE UNIFORM BUILDING CODE SECTION 3317.5, AND THE PERMITTEE SHALL ENGAGE CONSULTANTS, IF REQUIRED, TO PROVIDE PROFESSIONAL INSPECTIONS ON A TIMELY BASIS. THE PERMITTEE SHALL ACT AS COORDINATOR BETWEEN THE CONSULTANTS, THE CONTRACTOR AND THE BUILDING OFFICIAL. IN THE EVENT OF CHANGED CONDITIONS, THE PERMITTEE SHALL BE RESPONSIBLE FOR INFORMING THE BUILDING OFFICIAL OF SUCH CHANGE AND SHALL PROVIDE REVISED PLANS FOR APPROVAL.
30. ANY REVISION MADE IN THE APPROVED GRADING AS SHOWN ON THE GRADING PLAN MUST BE SPECIFICALLY APPROVED BY THE BUILDING OFFICIAL OR HIS DESIGNATED REPRESENTATIVE.
31. PRIOR TO THE FINAL APPROVAL OF ROUGH GRADING THE CIVIL ENGINEER SHALL SUBMIT AN "AS–BUILT" GRADING PLAN, IN ACCORDANCE WITH SECTION 3318.1 FOR APPROVAL BY THE BUILDING OFFICIAL. THIS PLAN SHALL SHOW ORIGINAL GROUND SURFACE AND AS–GRADED GROUND SURFACE ELEVATIONS, ALL FEATURES SHOW ON THE APPROVED GRADING PLAN, FINAL PAD GRADES, THE ACTUAL LOCA–TIONS AND ELEVATIONS OF ALL SUBDRAINS, ROCK DISPOSAL SITES, KEYWAYS, BUTTRESS OR STABILITY FILLS AND ANY OTHER REMEDIAL GRADING, ANY VARIANCES BETWEEN THE FINISHED WORK AND THE APPROVED PLANS, ACTUAL YARDAGE MOVED (INCLUDING REMEDIAL GRADING) AND A CERTIFICATION THAT THE "AS–BUILT" PLAN SHOWS THE ABOVE ITEMS. ROUGH GRADING WILL NOT BE APPROVED UNTIL AFTER APPROVAL OF THE "AS–BUILT" GRADING PLAN.
32. FOR ROUGH GRADING THE CONTRACTOR SHALL CONSTRUCT BERMS AT THE TOP OF ALL MANUFACTURED SLOPES AS SHOWN PER DETAIL ON THIS PLAN.
33. FINISH GRADING WILL BE COMPLETED AND APPROVED AND SLOPE PLANTING AND IRRIGATION SYSTEM INSTALLED BEFORE OCCUPANCY OF ANY BUILDING AND BEFORE RELEASE OF ANY GRADING BONDS.
34. ALL CUT AND FILL SLOPES OVER 5 FEET IN VERTICAL HEIGHT SHALL BE PLANTED AND PROVIDED WITH AN IRRIGATION SYSTEM IN ACCORDANCE WITH AN APPROVED KANDSCAPE PLAN.
35. THE APPLICANT SHALL MEET ALL REQUIREMENTS OF THE APPROVAL OF TENTATIVE TRACT NO. N/A APPLICABLE TO THE FINAL MAP.
36. ALL REQUIREMENTS OF THE PLANNING COMMISSION RESOLUTION NUMBER(S) CUP 06–037 SHALL BE MET.

LEGAL DESCRIPTION:

PARCEL 2 OF PARCEL MAP NO. 26558, IN THE CITY OF POMONA, COUNTY OF LOS ANGELES, STATE OF CALIFORNIA, AS PER MAP RECORDED IN BOOK 324, PAGES 21 AND 22 OF MAPS, IN THE OFFICE OF THE COUNTY RECORDER OF SAID COUNTY.

Earthwork Quantity:

Cut: 7583 CY

Fill: 0 CY

The Quantities Shown Hereon Are For Permit Purposes Only. Contractors To Verify Their Own Quantities.

SHEET INDEX

GRADING & DRAINAGE PLAN 2 SHEET.

LEGEND

(500)	EXISTING CONTOUR
	EXISTING BUILDING
	EXISTING SEWER LINE
X X	CHAIN LINK FENCE
[] []	EXISTING WALL
	PROPERTY LINE
	PORTLAND CEMENT CONCRETE
TW	TOP OF WALL
PP	POWER POLE
317.85 PCC	EXIST. ELEVATION
℄	CENTERLINE
EG	EDGE OF GUTTER
PCC	PORTLAND CEMENT CONCRETE
TC	TOP of CURB
TG	TOP of GRATE
FS	FINISHED SURFACE
FF	FINISHED FLOOR
FL	FLOW LINE
BLDG COR	BUILDING CORNER
GAR COR	GARAGE CORNER
LWN	LAWN
W FACE WALL	WEST FACE OF WALL
DRT.	DIRT
CP	CONTROL POINT
BW	BACK OF WALK
EFW	EAST FACE OF WALL
SDMH	STORM DRAIN MANHOLE
SMH	SEWER MANHOLE
FH	FIRE HYDRANT
WM	WATER METER
GM	GAS METER
AC	ASPHALTIC CONCRETE
FH	FIRE HYDRANT
PL	PROPERTY LINE
GB	GRADE BREAK

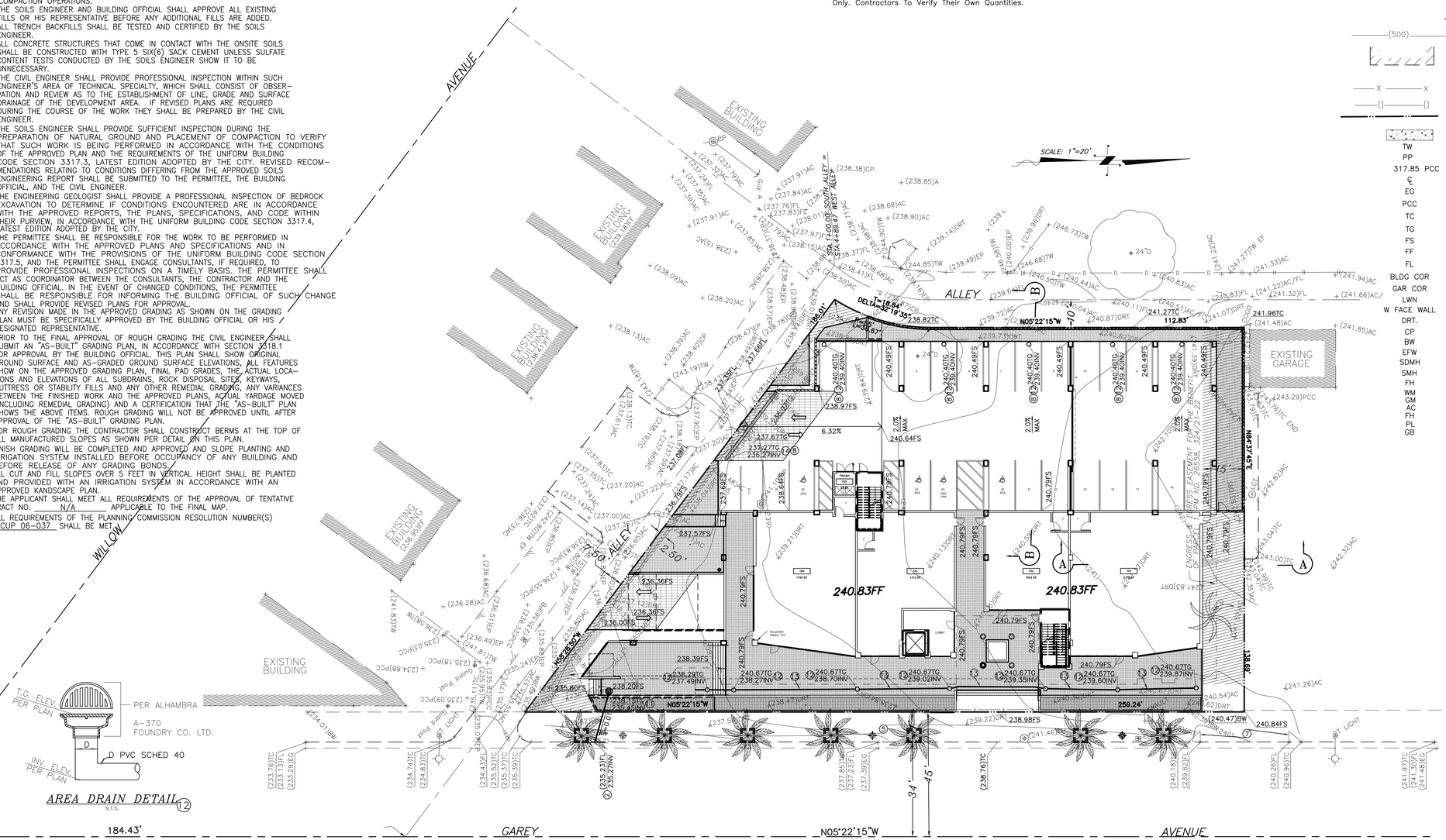

AREA DRAIN DETAIL (12)
N.T.S.

48 HOURS BEFORE YOU DIG
CALL
UNDERGROUND SERVICE ALERT
1–800–227–2600

UNDERGROUND UTILITIES & STRUCTURES

THE EXISTENCE AND APPROXIMATE LOCATION OF ANY UNDERGROUND UTILITIES OR STRUCTURES SHOWN ON THESE PLANS ARE OBTAINED BY A SEARCH OF AVAILABLE RECORDS. TO THE BEST OF OUR KNOWLEDGE , THERE ARE NO EXISTING UTILITIES OR STRUCTURES EXCEPT AS SHOWN ON THESE PLANS. THE ENGINEER ASSUMES NO LIABILITY AS TO THE EXACT LOCATION OF SAID SUBSTRUCTURES NOR FOR UTILITIES OR IRRIGATION SUBSTRUCTURES WHOSE LOCATIONS ARE NOT SHOWN. THE CONTRACTOR SHALL BE RESPONSIBLE FOR NOTIFYING ALL UTILITY AND IRRIGATION COMPANIES PRIOR TO WORK ON EXCAVATION TO DETERMINE EXACT LOCATION OF ALL SUBSTRUCTURES AFFECTING THIS WORK, WHETHER OR NOT SHOWN HEREON, AND FOR ANY DAMAGE OR PROTECTION TO THESE SUBSTRUCTURES.

PRIVATE ENGINEER'S NOTICE TO CONTRACTOR

ALL CONTRACTORS AND SUBCONTRACTORS PERFORMING WORK SHOWN ON OR RELATED TO THESE PLANS SHALL CONDUCT THEIR OPERATIONS SO THAT EMPLOYEES ARE PROVIDED A SAFE PLACE TO WORK AND THE PUBLIC IS PROTECTED. ALL CONTRACTORS AND SUBCONTRACTORS SHALL COMPLY WITH THE "OCCUPATIONAL SAFETY AND HEALTH REGULATIONS" OF THE U.S. DEPARTMENT OF LABOR, AND WITH THE STATE OF CALIFORNIA DEPARTMENT OF INDUSTRIAL RELATIONS " CONSTRUCTION SAFETY ORDERS". THE CIVIL ENGINEER SHALL NOT BE RESPONSIBLE IN ANY WAY FOR THE CONTRACTOR OR SUBCONTRACTOR'S COMPLIANCE WITH SAID REGULATIONS AND ORDERS. CONTRACTOR FURTHER AGREES THAT HE SHALL ASSUME SOLE COMPLETE RESPONSIBILITY FOR THE JOB SITE CONDITIONS DURING THE COURSE OF CONSTRUCTION ON THIS PROJECT, INCLUDING SAFETY OF ALL PERSONS AND PROPERTY. THIS REQUIREMENT SHALL APPLY CONTINUOUSLY AND NOT BE LIMITED TO NORMAL WORKING HOURS, AND THAT THE CONTRACTOR SHALL DEFEND, INDEMNIFY AND HOLD THE OWNER, THE CITY AND CIVIL ENGINEER HARMLESS FROM ANY AND ALL LIABILITY, REAL OR ALLEGED, IN CONNECTION WITH THE PERFORMANCE OF WORK ON THIS PROJECT, EXCEPTING LIABILITY ARISING FROM SOLE NEGLIGENCE OF THE OWNER OR ENGINEER.

FIRST FLOOR

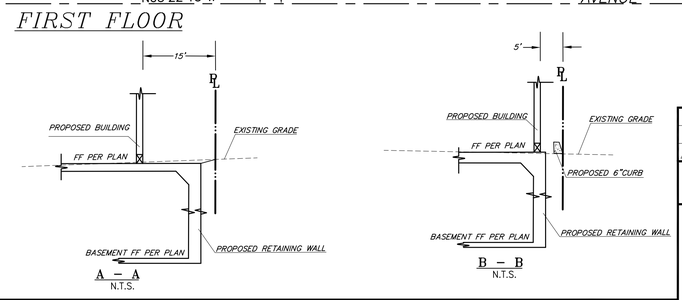

VICINITY MAP
NOT TO SCALE

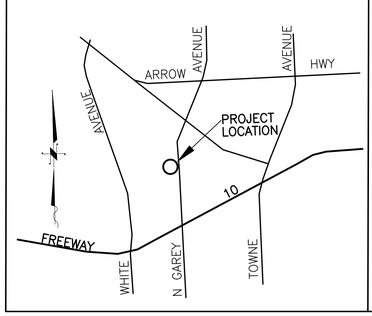

CONSTRUCTION NOTES:

1. INSTALL 96" DIA PERFORATED CMP PER DETAILS ON SHEET 2 AS BMP.
2. CONSTRUCT PARKWAY DRAIN PER APWA STD.151–1, S=1.0'.
3. CONSTRUCT 6" THICK PCC PAVEMENT PER ARCHITECT PLAN.
4. CONSTRUCT ALLEY INTERSECTION PER APWA STD. NO. 130–1, MODIFY.
5. REMOVE EXISTING & RECONSTRUCT NEW SIDEWALK PER APWA STD. NO. 113–1, TO MATCH EXISTING.
6. CONSTRUCT 5'X5' SUMP PUMP PIT WITH SUMP PUMP PER DETAIL HEREON.
7. EXISTING DRIVEWAY TO REMAIN.
8. CONSTRUCT 4" PVC PIPE SCHEDULE 40 DOWNDRAIN FROM 1ST FLOOR TO BASEMENT.
9. CONSTRUCT 3" CAST IRON PIPE.
10. CONSTRUCT 6" IP CURB DRAIN PER APWA STD. PLAN NO. 150–2, N=2.
11. CONSTRUCT 18"X18" OVER–FLOW BASIN PER BROOKS PRODUCTS.
12. CONSTRUCT 6" AREA DRAIN PER DETAIL HEREON.
13. INSTALL 4" PVC PIPE SCHEDULE 40. SLOPE=1% MIN.
14. CONSTRUCT 12" WIDE X 12" DEPTH TRENCH DRAIN FILTER PER DETAIL HEREON ON SHEET 2. GRATE TO BE TRAFFIC RATED.

BENCH MARK G 2172
RDBM TAG IN S CB 300MM E/O BCR @ SE COR ARROW HWY & GAREY AVE 18M E & 12M S/O C/L INT.
POMONA(2000) NAVD 88 DATUM ELEVATION: 317.528'

☐ ALL WALL REQUIRE SEPARATE PERMITS

☐ ALL IMPROVEMENTS SHOWN IN RIGHT–OF–WAY REQUIRE APPROVALS AND PERMITS FROM THE ENGINEERING DIVISION OF PUBLIC WORKS DEPARTMENT OF THE CITY OF POMONA.

PLANS PREPARED BY:
CaliLand Engineering, Inc.
Civil Engineering • Land Surveying • Subdivision
1216 SOUTH GARFIELD AVENUE, SUITE 200, ALHAMBRA, CA 91801
Phone: (626)281–2288 Fax: (626)281–2088
Visit us at: www.CaliLand.net

☐ APPROVED FOR PRECISE GRADING: PLANNING DIVISION DATE

☐ APPROVED FOR ROUGH GRADING: PLANNING DIVISION DATE

☐ ACCEPTED: BUILDING DIVISION DATE

☐ RECOMMENDED FOR APPROVAL: CSG CONSULTANTS, INC. DATE

REVISION	DATE	APPRV'D BY

CITY OF POMONA

PRECISE GRADING PLAN
1833 N. GAREY AVENUE,
APN: 8359–007–033

RECOMMENDED
CHECKED
DESIGNED KE
DRAWN KE

MOSHE LEVY
G–2000 CONSTRUCTION, INC.
28348 ROADSIDE DR. SUITE 205
AGOURA HILLS, CA 91301

SHEET 1 OF 2

(14) TRENCH DRAIN FILTER DETAIL

N.T.S.
www.kristar.com
(800)579-8819

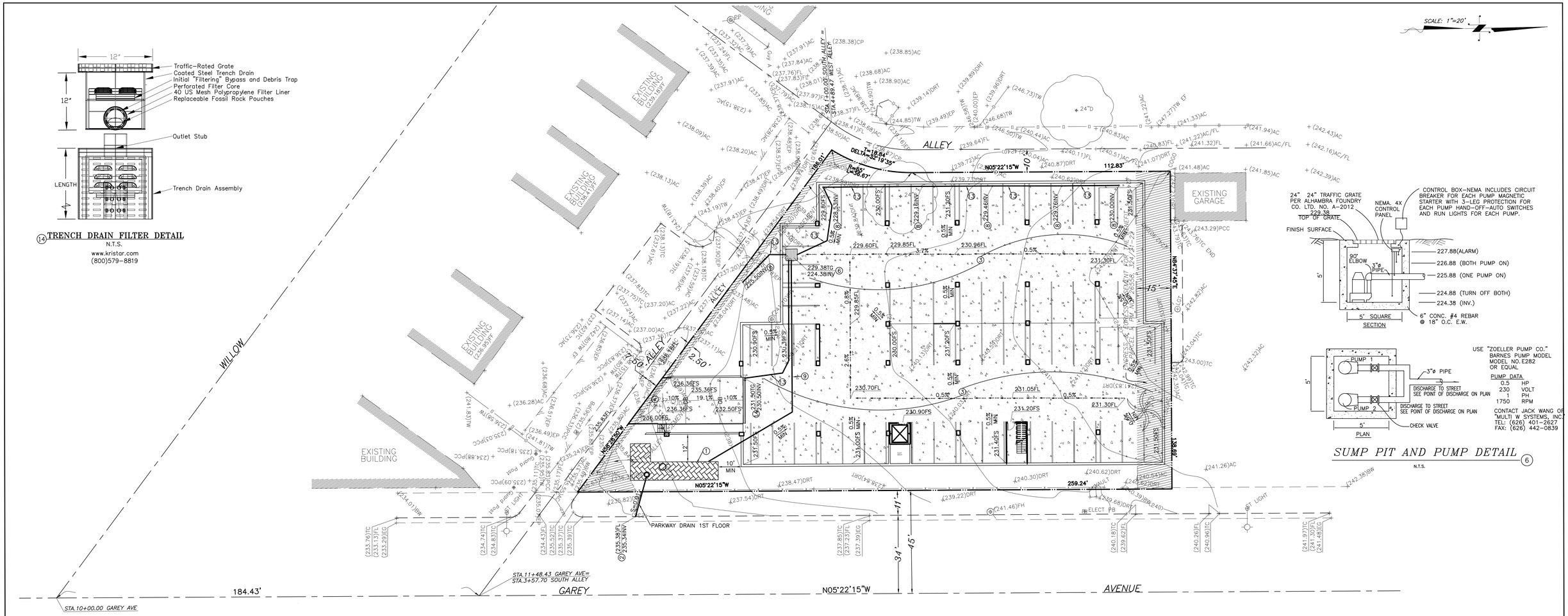

BASEMENT FLOOR

SUMP PIT AND PUMP DETAIL (6)

N.T.S.

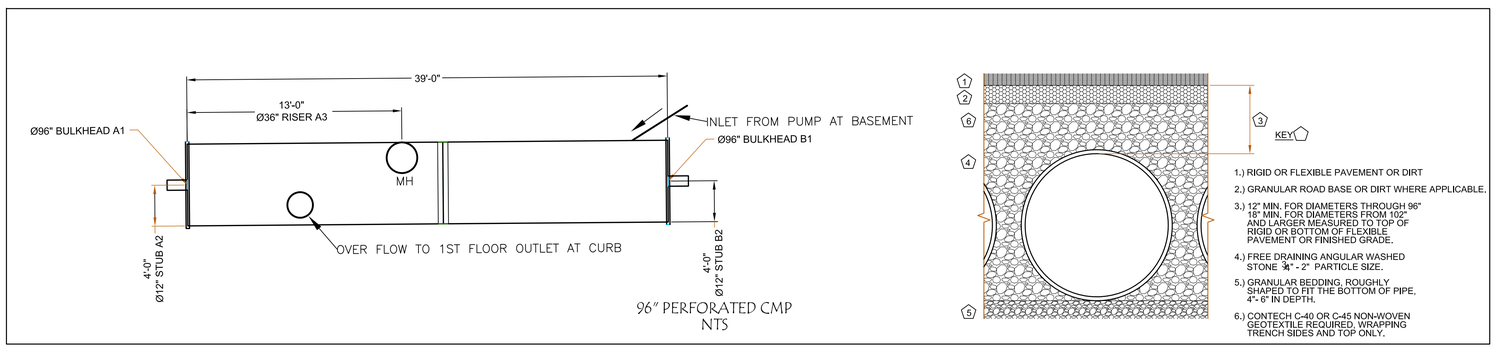

CONSTRUCTION NOTES:

1. INSTALL 96" DIA PERFORATED CMP PER DETAILS HEREON AS BMP.
2. CONSTRUCT PARKWAY DRAIN PER APWA STD.151-1, S=1.0'.
3. CONSTRUCT 6" THICK PCC PAVEMENT PER ARCHITECT PLAN.
4. CONSTRUCT ALLEY INTERSECTION PER APWA STD. NO. 130-1, MODIFY.
5. REMOVE EXISTING & RECONSTRUCT NEW SIDEWALK PER APWA STD. NO. 113-1, TO MATCH EXISTING.
6. CONSTRUCT 5'X5' SUMP PUMP PIT WITH SUMP PUMP PER DETAIL HEREON.
7. EXISTING DRIVEWAY TO REMAIN.
8. CONSTRUCT 4" PVC PIPE SCHEDULE 40 DOWNDRAIN FROM 1ST FLOOR TO BASEMENT.
9. CONSTRUCT 3" CAST IRON PIPE.
10. CONSTRUCT 6" IP CURB DRAIN PER APWA STD. PLAN NO. 150-2, N=2.
11. CONSTRUCT 18"X18" OVER-FLOW BASIN PER BROOKS PRODUCTS.
12. CONSTRUCT 6" AREA DRAIN PER DETAIL HEREON.
13. INSTALL 4" PVC PIPE SCHEDULE 40. SLOPE=1% MIN.
14. CONSTRUCT 12" WIDE X 12" DEPTH TRENCH DRAIN FILTER PER DETAIL HEREON ON SHEET 2. GRATE TO BE TRAFFIC RATED.

REGISTERED PROFESSIONAL ENGINEER
YOON LAI
NO. 60565
EXP. 12-31-16
CIVIL
STATE OF CALIFORNIA

BENCH MARK G 2172
RDBM TAG IN S CB 300MM E/O BCR @ SE COR ARROW HWY & GAREY AVE 18M E & 12M S/O C/L INT.
POMONA(2000) NAVD 88 DATUM ELEVATION: 517.528'

☐ ALL WALL REQUIRE SEPARATE PERMITS

☐ ALL IMPROVEMENTS SHOWN IN RIGHT-OF-WAY REQUIRE APPROVALS AND PERMITS FROM THE ENGINEERING DIVISION OF PUBLIC WORKS DEPARTMENT OF THE CITY OF POMONA.

PLANS PREPARED BY:
CaliLand Engineering, Inc.
Civil Engineering • Land Surveying • Subdivision
1216 SOUTH GARFIELD AVENUE, SUITE 200, ALHAMBRA, CA 91801
Phone: (626)281-2288 Fax: (626)281-2088
Visit us at: www.CaliLand.net

☐ APPROVED FOR PRECISE GRADING: PLANNING DIVISION DATE

☐ APPROVED FOR ROUGH GRADING: PLANNING DIVISION DATE

☐ ACCEPTED BUILDING DIVISION DATE

☐ RECOMMENDED FOR APPROVAL CSG CONSULTANTS, INC. DATE

REVISION	DATE	APPRV'D BY

CITY OF POMONA

PRECISE GRADING PLAN

1833 N. GAREY AVENUE,
APN: 8359-007-033

RECOMMENDED
CHECKED
DESIGNED KE
DRAWN KE

MOSHE LEVY
G-2000 CONSTRUCTION, INC.
28348 ROADSIDE DR. SUITE 205
AGOURA HILLS, CA 91301

SHEET 2 OF 2

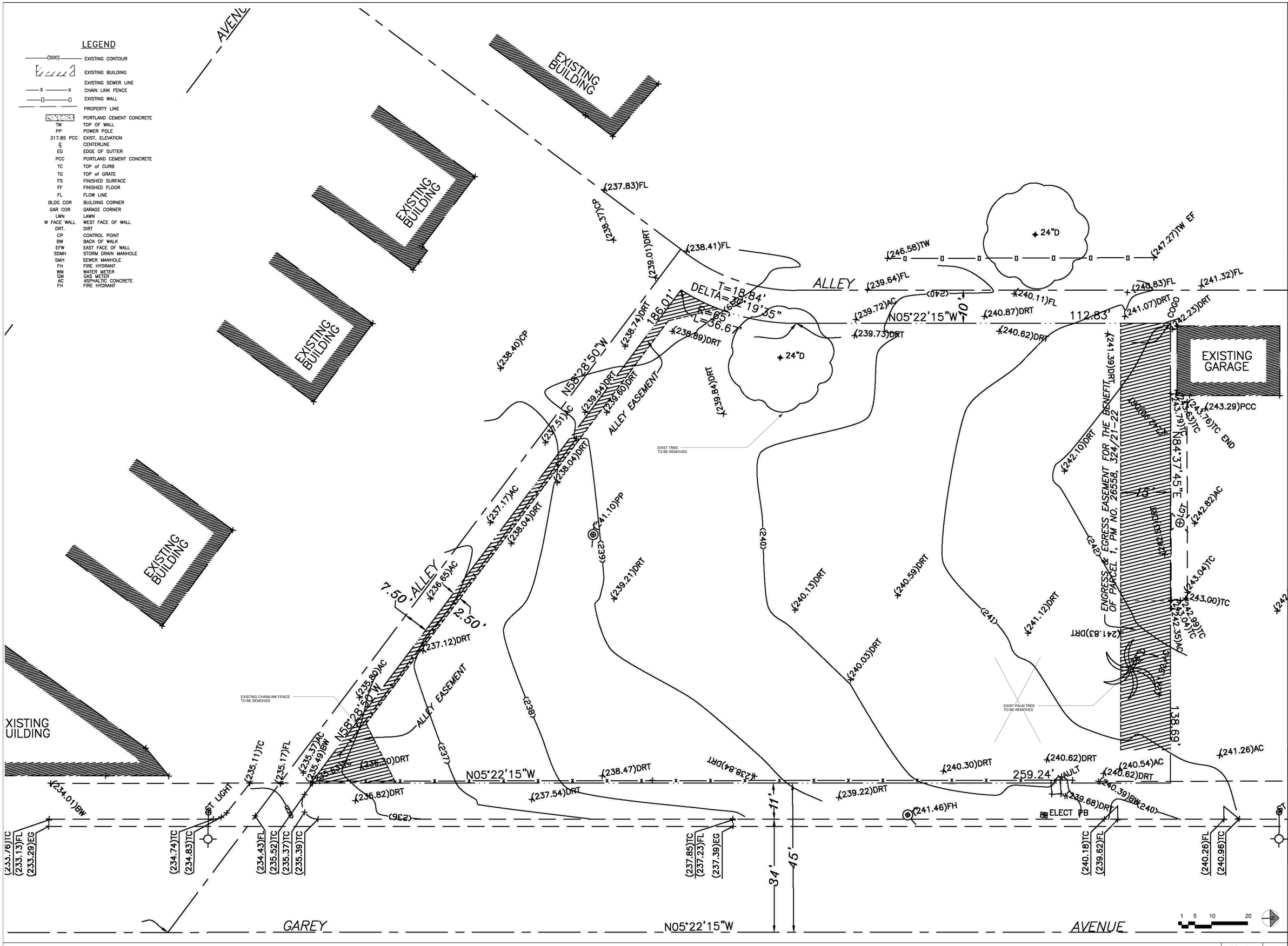

THE ABOVE DRAWINGS AND SPECIFICATIONS AND DESIGNS SHOWN ON THESE PLANS AND SPECIFICATIONS HEREBY ARE AND SHALL REMAIN THE PROPERTY OF THE ARCHITECT AND NO PART THEREOF SHALL BE COPIED, DISCLOSED TO OTHERS OR USED IN CONNECTION WITH ANY OTHER WORK OR PROJECT OTHER THAN THE SPECIFIC PROJECT FOR WHICH THEY HAVE BEEN PREPARED AND DEVELOPED, WITHOUT THE WRITTEN CONSENT OF THE ARCHITECT. VISUAL CONTACT WITH THESE DRAWINGS AND SPECIFICATIONS SHALL CONSTITUTE CONCLUSIVE EVIDENCE OF ACCEPTANCE OF THESE RESTRICTIONS.

NO.	REVISIONS	DATE
01	PLAN CHECK REVISIONS	06/06/2016

LICENSED ARCHITECT
STEPHEN M. ALBERT
NO. C 9412
REN. 5-31-13.
STATE OF CALIFORNIA

1833 N. GAREY AVE.

1833 NORTH GAREY AVENUE
PAMONA, CALIFORNIA 91767

EXISTING CONDITIONS

the albert group architects
2032 Stewart Ave | Los Angeles, CA 90025 310.312.9555

C.U.P. NUMBER:

PROJECT NUMBER: 14130

PROJECT STATUS: PLAN CHECK RESUBMITTAL

ISSUE DATE: 07/18/2016

SHEET NUMBER: A1.00

EXISTING CONDITIONS | SCALE: 1" = 10'-0" | 1

PROJECT SUMMARY TABLE

ZONING INFORMATION:	POMONA CORRIDORS SPECIFIC PLAN		
ZONING DESIGNATION/ SPECIFIC PLAN AREA:	(T4) WORKPLACE GATEWAY SEGMENT		
LOT AREA:	28,887 SF		
BUILDING FOOTPRINT:	7,819 SF		
LOT COVERAGE	27%		
GROSS BUILDING AREA:	1ST FLOOR	=	7,819 SF
	2ND FLOOR	=	16,189 SF
	3RD FLOOR	=	15,528 SF
	SUBTOTAL	=	39,536 SF
	UNDERGROUND PARKING	=	21,526 SF
	TOTAL	=	61,062 SF
BUILDING HEIGHT:	37' / 3 STORIES ABOVE GRADE, 1 LEVEL OF UNDERGROUND PARKING		
FLOOR AREA:	1ST FLOOR	=	6,913 SF
	2ND FLOOR	=	15,359 SF
	3RD FLOOR	=	14,764 SF
	TOTAL	=	37,036 SF
PARKING AREA:	GROUND FLOOR	=	9,682 SF
	UNDERGROUND	=	20,593 SF

ALLOWABLE AREA CALCULATION

2013 CBC, SECTION 503

ALLOWABLE AREA CALCULATION
Aa = {At + [At x If] + [At x Is]}
Aa = ALLOWABLE BUILDING AREA PER STORY (SQUARE FEET)
At = TABULAR BUILDING AREA (SQUARE FEET) PER STORY IN ACCORDANCE WITH TABLE 503
If = AREA INCREASE FACTOR DUE TO FRONTAGE AS CALCULATED IN ACCORDANCE WITH SECTION 506.2
Is = AREA INCREASE FACTOR DUE TO SPRINKLER PROTECTION AS CALCULATED IN ACCORDANCE WITH SECTION 506.3. THE SPRINKLER AREA INCREASE FOR PROPOSED R-2 PROJECT IS 200% OR 2

FLOOR / LEVEL	CONSTRUCTION TYPE	ALLOWABLE AREA		
RESIDENTIAL / R-2 2ND - 3RD FLRS	TYPE V-B-FS	At = 7,000 SF	If = 0	Is = 2
		Aa = {7,000 + [7,000 x 2] }		
		Aa = {7,000 + [14,000] }		
		Aa = 21,000 SF PER STORY		
		PROPOSED AREA PER FLOOR: 2ND FLOOR: 19,051 SF 3RD FLOOR: 18,000 SF		
SUBTERRANEAN & 1ST FLR	TYPE I-B-FS	UNLIMITED		

PARKING TABULATION

PARKING REQUIRED

1 BEDROOM UNITS	13 x 1.5 PER UNIT	20 SPACES
2 BEDROOM UNITS	18 x 2 PER UNIT	36 SPACES
3 BEDROOM UNITS	4 x 2.5 PER UNIT	10 SPACES
GUEST SPACES	35 UNITS X 1.5 PER 10 UNITS*	06 SPACES
TOTAL RESIDENTIAL PARKING		**72 SPACES**
BUSINESS AND PERSONAL SERVICES	6,031 SF / 1000 X 2.5*	16 SPACES MIN
PARKING REDUCTION	-1 SPACE / 200 SF OF ADDITIONAL PUBLIC OPEN SPACE**	**-8 SPACES**
TOTAL VEHICULAR PARKING REQUIRED	***80 SPACES MIN 60 STD 25% CMP MAX (20 SPACES)***	
ADA PARKING: 1 PER 20 STALLS		80 SPACES = 4 REQ'D

PARKING REQUIREMENT PER POMONA CORRIDORS SPECIFIC PLAN
* SHARED PARKING REDUCTION PER PSCP 2.7.1.B
** PUBLIC OPEN SPACE PARKING REDUCTION REDUCTION PER PSCP 2.7.1.C.4
REQUIRED PUBLIC OPEN SPACE= 5,250 SF
PROVIDED PUBLIC OPEN SPACE= 6,988 SF
ADDITIONAL PUBLIC OPEN SPACE = 1,738 SF

PARKING PROVIDED

PARKING GROUND LEVEL - VEHICULAR	27 TOTAL SPACES	21 STD (04 ADA), 6 CMP
PARKING UNDERGROUND - VEHICULAR	60 TOTAL SPACE	46 STD (0 ADA), 14 CMP
TOTAL VEHICULAR PARKING PROVIDED	***87 TOTAL SPACES***	***67 STD** (04 ADA), **20 CMP***

OPEN SPACE REGULATIONS

PUBLIC OPEN SPACE REQUIRED

UNIT TYPE	REQ'D SF	PROPOSED UNITS	SUBTOTAL REQUIRED
RETAIL*	-		
RESIDENTIAL	150SF/UNIT	35 UNITS	5,250 SF
TOTAL PUBLIC OPEN SPACE REQUIRED		-	**5,250 SF**

*RETAIL PUBLIC SPACE IS ONLY FOR DEVELOPMENT OVER 20,000 SF OF RETAIL BUILDING AREA

PRIVATE OPEN SPACE REQUIRED

UNIT TYPE	REQ'D SF	PROPOSED UNITS	SUBTOTAL REQUIRED
RESIDENTIAL	60SF/UNIT	35 UNITS	2,100SF
TOTAL PRIVATE OPEN SPACE REQUIRED			**2,100 SF**

OPEN SPACE PROVIDED

FLOOR LEVEL	SUBTOTAL PUBLIC	SUBTOTAL PRIVATE
FIRST FLOOR	6,922 SF	-
SECOND FLOOR	-	1,952 SF
THIRD FLOOR	-	1,690 SF
TOTAL PRIVATE OPEN SPACE PROVIDED		**3,642 SF**
TOTAL PUBLIC OPEN SPACE PROVIDED	**6,922 SF**	

GENERAL NOTES

1. PURSUANT TO CSP SECTION 2.6.8.G.2, UTILITY, TRASH, RECYCLING, FOOD WASTE AND SERVICE EQUIPMENT, INCLUDING SATELLITE RECEVING DISHES, TRANSFORMERS, AND BACKFLOW DEVICES SHOULD BE ENCLOSED OR SCREENED FROM VIEW BYLANDSCAPING, FENCING OR OTHER ARCHITECTURAL MEANS. BACKFLOW DEVICES SHOULD BE BUILT TO THE CITY'S LATEST STANDARDS. ANY SUCH ITEM NOT DEPICTED INTHE PLANNING SUBMITTAL SHALL CONFORM TO THIS REQUIREMENT.
2. PROVIDE APPROVED SIGNS OR OTHER APPROVED NOTICES OR MARKINGS THAT INCLUDE THE WORDS 'NO PARKING - FIRE LANE'. SIGNS SHALL HAVE A MINIMUM DIMENSION OF 12 INCHES WIDE BY 18 INCHES HIGH AND HAVE RED LETTERS ON A WHITE REFLECTIVE BACKGROUND. SIGNS SHAL BE PROVIDED FOR FIRE APPARATUS ACCESS ROADS, TO CLEARLY INDICATE THE ENTRANCE TO SUCH ROAD, OR PROHIBIT THE OBSTRUCTION THEREOF AND AT INTERVALS, AS REQUIRED BY THE FIRE INSPECTOR. FIRE CODE 503.3. SEE 1|AD.90
3. APPROVED BUILDING ADDRESS NUMBERS, BUILDING NUMBERS OR APPROVED BUILDING IDENTIFICATION SHALL BE PROVIDED AND MAINTAINED SO AS TO BE PLAINLY VISIBLE AND LEGIBLE FROM THE STREET FRONTING THE PROPERTY. THE NUMBERS SHAL CONTRAST WITH THEIR BACKGROUND, BE ARABIC NUMERALS OR ALPHABET LETTERS, AND BE A MINIMUM OF 4 INCHES HIGH WITH A MINIMUM STROKE WIDTH OF 0.5 INCH. FIRE CODE 505.1
4. PLANS SHOWING UNDERGROUND PIPING FOR PRIVATE ON-SITE FIRE HYDRANTS SHALL BE SUBMITTED TO THE SPRINKLER PLAN CHECK UNIT FOR REVIEW AND APPROVAL PRIOR TO INSTALLATION. FIRE CODE 901.2, COUNTY OF LOS ANGELES FIRE DEPARTMENT REGULATION 7.
5. DUMPSTERS AND CONTAINERS WITH AN INDIVIDUAL CAPACITY OF 1.5 CUBIC YARDS OR MORE SHALL NOT BE STORED IN BUILDINGS OR PLACED WITHIN 5 FEET OF COMBUSTIBLE WALLS, OPENINGS OR COMBUSTIBLE ROOF EAVES, UNLESS AREAS CONTAINING DUMPSTERS OR CONTAINERS ARE PROTECTED BY AN APPROVED AUTOMATIC FIRE SPRINKLER SYSTEM. FIRE CODE 304.3.3
6. THE REQUIRED FIRE FLOW FOR FIRE HYDRANTS AT THIS LOCATION IS 2375, AT 20 PSI RESIDUAL PRESSURE, FOR A DURATION OF 2 HOURS OVER AND ABOVE MAXIMUM DAILY DOMESTIC DEMAND. FIRE CODE 507.3 AND APPENDIX B.

TYPE OF CONSTRUCTION PER BUILDING CODE	=	VB
FIRE FLOW CALCULATION AREA	=	31,717 SF
FIRE FLOW BASED ON THE FIRE-FLOW CALC. AREA	=	4,750 gpm
REDUCTION FOR FIRE SPRINKLERS (MAXIMUM 50%)	=	2,375 gpm
TOTAL FIRE FLOW REQUIRED	=	2,375 gpm

SITE PLAN KEY NOTES

1. ASPHALT
2. CAST IN PLACE CONCRETE
3. PLAZA, ENHANCED/ENRICHED HARDSCAPE, PURSUANT TO CSP SECTION 2.6.4.D.4, SEE LANDSCAPING SHEET L1 FOR MORE INFORMATION.
4. GLASS RAILING SYSTEM
5. TRANSFORMER PAD LOCATION, SEE LANDSCAPE DRAWINGS FOR REQUIRED SCREENING
6. BACKFLOW PREVENTER/DEVICE, TO BE BUILT TO CITY'S LATEST STANDARDS, LOCATION TO BE VERIFIED AND APPROVED BY FIRE DEPARTMENT, SEE LANDSCAPE DRAWINGS FOR SCREENING COMPLIANCE
7. DECORATIVE PAVING BAND, MINIMUM OF 20', SEE LANDSCAPING SHEET L1 FOR MORE INFORMATION.
8. ALLEY SETBACK AREA TO BE LANDSCAPED PER 2.6.6, AND INCLUDE GROUNDCOVER AND COMPLY WITH MODERATE SCREENING REQUIREMENTS PER 2.6.6.B.3, SEE LANDSCAPE DRAWING L1 FOR MORE INFORMATION
9. FRONT YARD SETBACK ZONE TO BE LANDSCAPED PURSUANT TO 2.6.6.A.3.d & e, AND INCLUDE A MIN AVERAGE OF ONE TREE THAT REACHES AT LEAST 25' IN CANOPY HEIGHT AT MATURITY FOR EVERY 40' OF LINEAR FRONTAGE. TREES AND SHRUBS TO BE LIMITED TO A MAXIMUM OF TWO SPECIES AND MUST BE PLANTED IN REGULAR FORMAL PATTERNS OR EQUALLY SPACED CLUSTERS. SEE LANDSAPE DRAWING L1 FOR MORE INFORMATION.
10. PROVIDE SINGLE-ARM PENDANT BOULEVARD-SCALE STREET LIGHTING AT SIDEWALK CORNER, OR ATOP TRAFFIC SIGNAL POLE AS REQUIRED BY THE CITY OF POMONA. WHERE APPROPRIATE, THE POLE SHALL CONTAIN BANNER ARMS WITH WIND RELIEF MOUNTING DEVICES. LIGHT SOURCE SHOULD BE LOCATED 25'-30' ABV FIN GRAD (CSP 2.5.1.D)
11. ELECTRICAL SWITCHGEAR, SEE LANDSCAPE DRAWING L1 FOR REQUIRED SCREENING.
12. COVERED BIKE RACKS, CIIRCULAR GALVANIZED STEEL BICYCLE RACKS WITH SQUARE TUB SECTIONS, TO MATCH CORRIDOR SPECIFIC PLAN STANDARDS, SEE ADJACENT IMAGE.
13. 8" VITRIFIED CLAY PIPE SEWER
14. 12" DUCTILE IRON PIPE
15. GATE VALVE
16. EXISTING GRADE CONTOURS

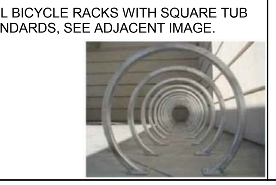

WALL TYPES

W1 6" CURB
W2 8" CMU WALL ORCO BLACK BLOCK
W3 8" CAST IN PLACE BOARD FORMED CONCRETE WALL

D BUILDING EXTERIOR DOOR
ED EXIT DOOR
SD SERVICE DOOR

THE ABOVE DRAWINGS AND SPECIFICATIONS AND IDEAS, DESIGNS AND ARRANGEMENTS REPRESENTED THEREBY ARE AND SHALL REMAIN THE PROPERTY OF THE ARCHITECT AND NO PART THEREOF SHAL BE COPIED DISCLOSED TO OTHERS OR USED IN CONNECTION WITH ANY OTHER WORK OR PROJECT OTHER THAN THE SPECIFIC PROJECT FOR WHICH THEY HAVE BEEN PREPARED AND DEVELOPED, WITHOUT THE WRITTEN CONSENT OF THE ARCHITECT. VISUAL CONTACT WITH THESE DRAWINGS OR SPECIFICATIONS SHALL CONSTITUTE CONCLUSIVE EVIDENCE OF ACCEPTANCE OF THESE RESTRICTIONS.

NO.	REVISIONS	DATE
01	PLAN CHECK REVISIONS	06/06/2016

LICENSED ARCHITECT
STEPHEN M. ALBERT
NO. C 9412
REN. 5-31-13
STATE OF CALIFORNIA

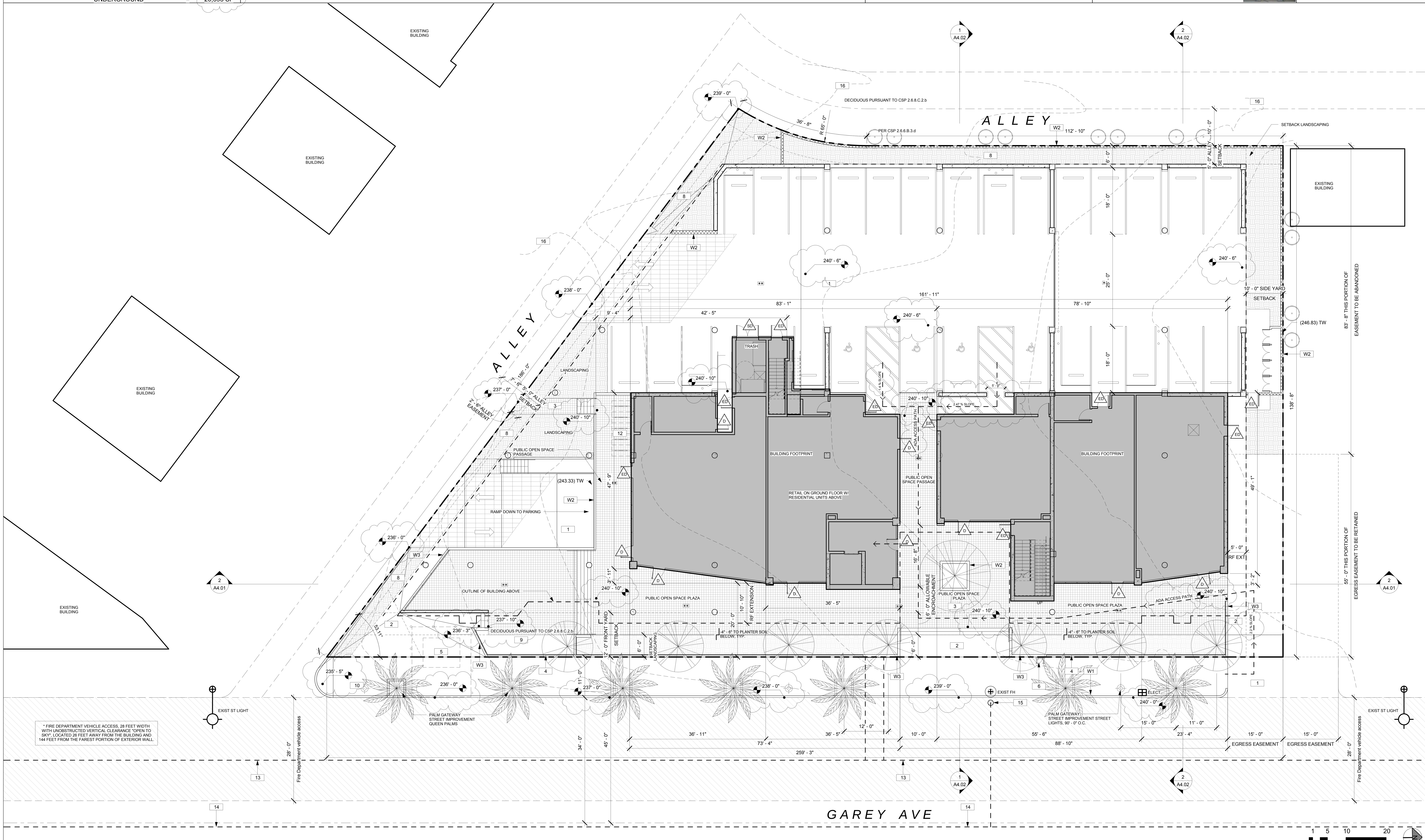

1833 N. GAREY AVE.

1833 NORTH GAREY AVENUE
PAMONA, CALIFORNIA 91767

SITE PLAN

the albert group architects
2032 Stoner Ave | Los Angeles, CA 90025 310.820.8863

C.U.P NUMBER:

PROJECT NUMBER: 14130

PROJECT STATUS: PLAN CHECK RESUBMITTAL

ISSUE DATE: 07/18/2016

SHEET NUMBER: A1.01

SITE PLAN | SCALE: 1" = 10'-0" | 1

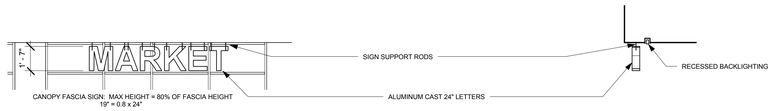

STOREFRONT SIGN ELEVATION | SCALE: 1/4" = 1'-0" | D

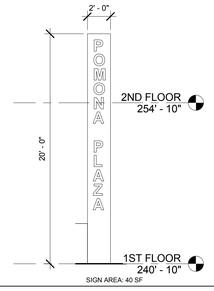

STOREFRONT SIGN SECTION | SCALE: 1/4" = 1'-0" | C

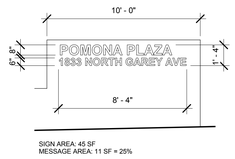

PYLON SIGN ELEVATION | SCALE: 3/16" = 1'-0" | B

MONUMENTAL SIGN ELEVATION | SCALE: 1/4" = 1'-0" | A

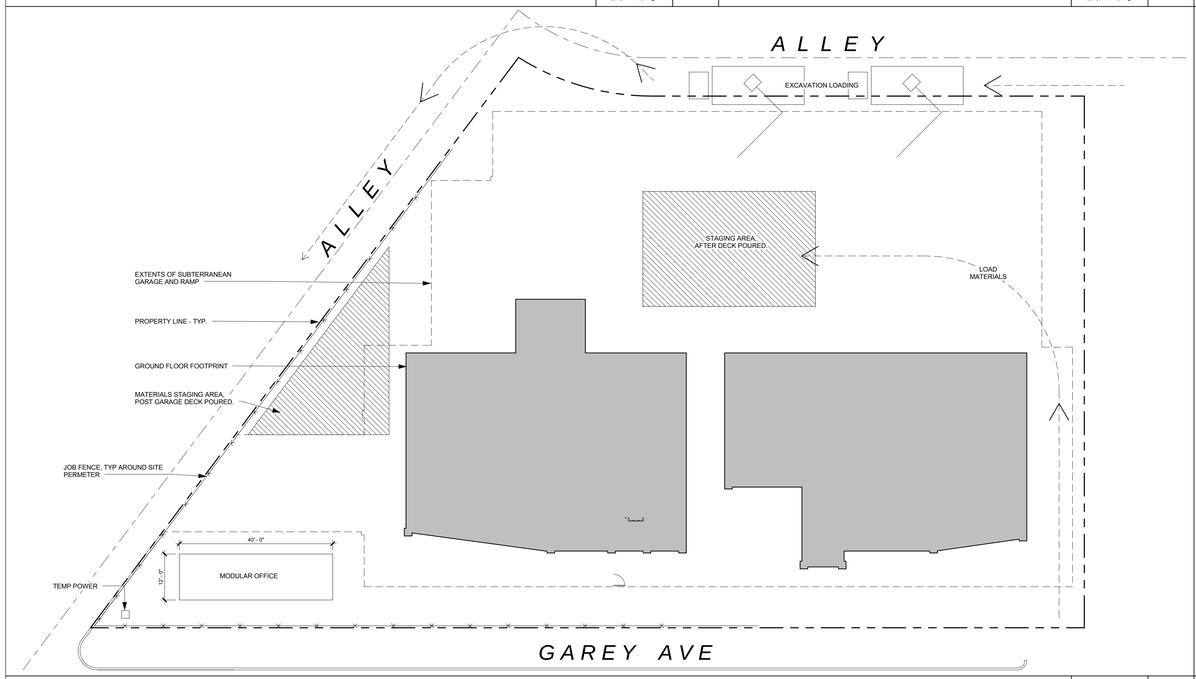

CONSTRUCTION STAGING PLAN | SCALE: 1/16" = 1'-0" | 4

SIGN AND LIGHTING PLAN | SCALE: 1" = 20'-0" | 2

PUBLIC SPACE FURNISHINGS

PLAN	ELEVATION	
		8' LONG, PEDESTAL MOUNTED BENCH
		2 (STACKABLE) CHAIRS AND 30" DIAMETER TABLE
		4 (STACKABLE) CHAIRS AND 36" DIAMETER TABLE
		TRASH RECEPTACLES, 4 TOTAL (2 RECYCLING)

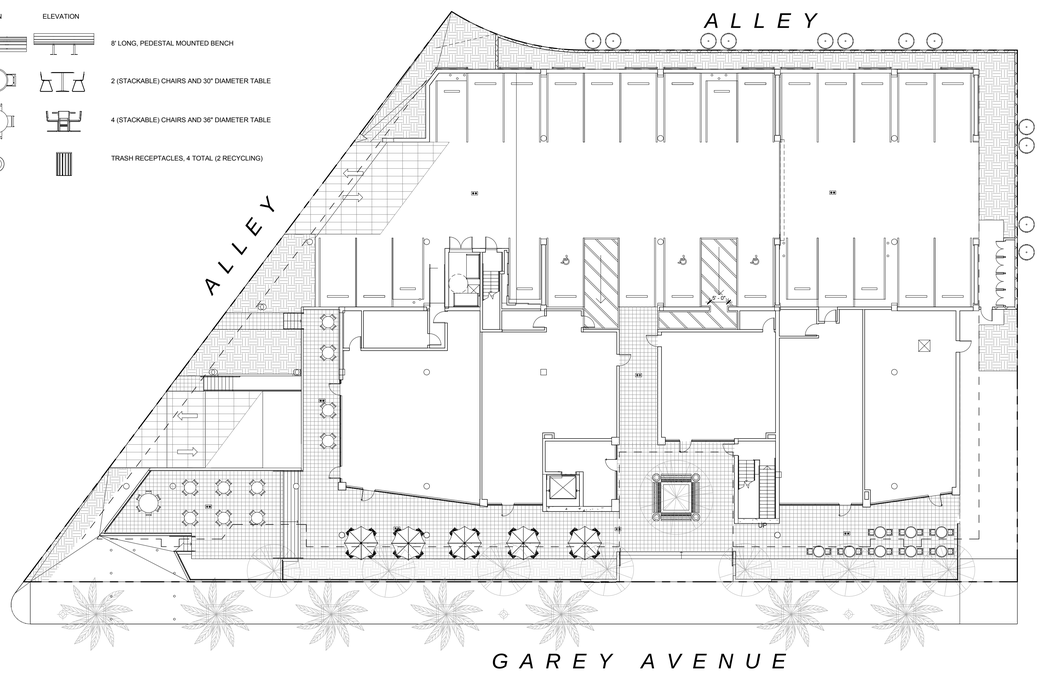

1ST FLOOR - PUBLIC SPACE FURNISHINGS | SCALE: 1/16" = 1'-0" | 3

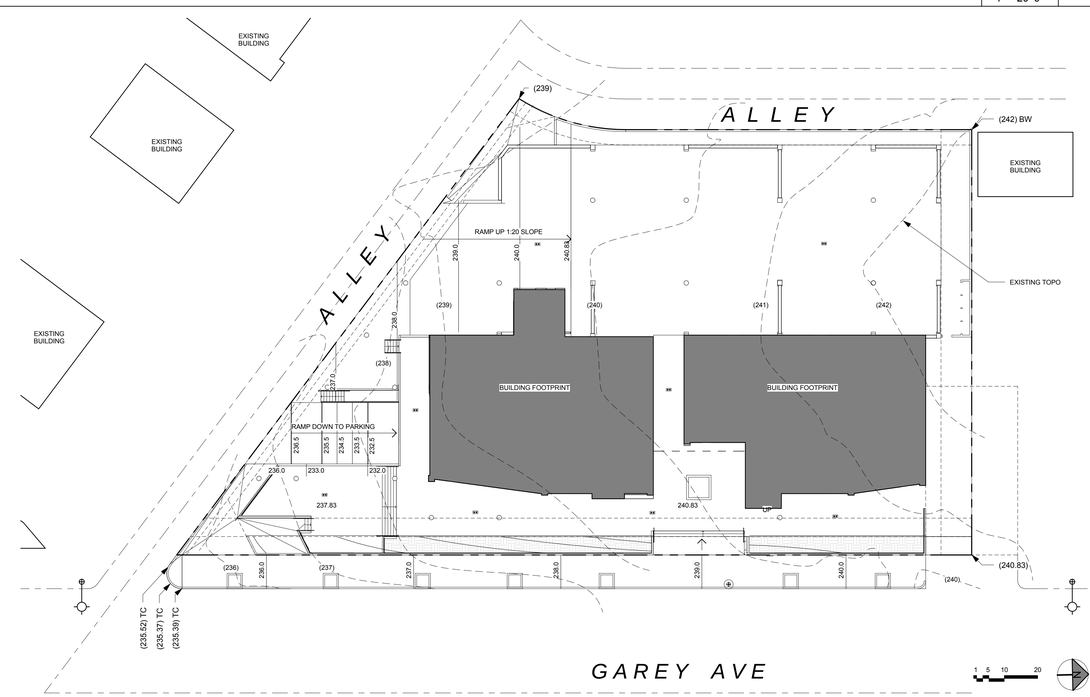

GRADING PLAN | SCALE: 1" = 20'-0" | 1

THE ABOVE DRAWINGS AND SPECIFICATIONS AND DESIGNS SHOWN THEREON AND REPRESENTED THEREBY ARE AND SHALL REMAIN THE PROPERTY OF THE ARCHITECT AND NO PART THEREOF SHALL BE CONVEYED TO OTHERS OR USED IN CONNECTION WITH ANY OTHER WORK OR PROJECT OTHER THAN THE SPECIFIC PROJECT FOR WHICH THEY HAVE BEEN PREPARED AND DEVELOPED, WITHOUT THE WRITTEN CONSENT OF THE ARCHITECT. VISUAL CONTACT WITH THESE DRAWINGS OR SPECIFICATIONS SHALL CONSTITUTE CONCLUSIVE EVIDENCE OF ACCEPTANCE OF THESE RESTRICTIONS.

NO.	REVISIONS	DATE
01	PLAN CHECK REVISIONS	06/06/2016

LICENSED ARCHITECT
STEPHEN M. ALBERT
NO. C 9412
REN. 5-31-13
STATE OF CALIFORNIA

1833 N. GAREY AVE.

1833 NORTH GAREY AVENUE
PAMONA, CALIFORNIA 91767

SITE PLAN DETAILS

the albert group architects
2032 Stoner Ave | Los Angeles, CA 90025 310.312.4146

C.U.P NUMBER:

PROJECT NUMBER: 14130

PROJECT STATUS: PLAN CHECK RESUBMITTAL

ISSUE DATE: 07/18/2016

SHEET NUMBER: A1.02

PARKING TABULATION

PARKING REQUIRED

1 BEDROOM UNITS	13 x 1.5 PER UNIT	20 SPACES
2 BEDROOM UNITS	18 x 2 PER UNIT	36 SPACES
3 BEDROOM UNITS	4 x 2.5 PER UNIT	10 SPACES
GUEST SPACES	35 UNITS X 1.5 PER 10 UNITS*	06 SPACES
TOTAL RESIDENTIAL PARKING		**72 SPACES**
BUSINESS AND PERSONAL SERVICES	6,031 SF / 1000 X 2.5*	16 SPACES MIN
PARKING REDUCTION	-1 SPACE / 200 SF OF ADDITIONAL PUBLIC OPEN SPACE**	**-8 SPACES**
TOTAL VEHICULAR PARKING REQUIRED	***80 SPACES MIN 60 STD 25% CMP MAX (20 SPACES)***	
ADA PARKING: 1 PER 20 STALLS		80 SPACES = 4 REQ'D

PARKING REQUIREMENT PER POMONA CORRIDORS SPECIFIC PLAN
* SHARED PARKING REDUCTION PER PSCP 2.7.1.B
** PUBLIC OPEN SPACE PARKING REDUCTION:REDUCTION PER PSCP 2.7.1.C.4
REQUIRED PUBLIC OPEN SPACE= 5,250 SF
PROVIDED PUBLIC OPEN SPACE= 6,988 SF
ADDITIONAL PUBLIC OPEN SPACE = 1,738 SF

PARKING PROVIDED

PARKING GROUND LEVEL - VEHICULAR	27 TOTAL SPACES	21 STD (04 ADA), 6 CMP
PARKING UNDERGROUND - VEHICULAR	60 TOTAL SPACE	46 STD (0 ADA), 14 CMP
TOTAL VEHICULAR PARKING PROVIDED	***87 TOTAL SPACES***	***67 STD*** (04 ADA), ***20 CMP***

PLAN KEY NOTES

P1	OVERHEAD COILING SECURITY GRILLE, PURSUANT TO CSP 2.7.4.A.2
P2	FLOOR TO CEILING SECURITY FENCE, PURSUANT TO CPS 2.7.4.A.2
P3	RESIDENTIAL PARKING
P4	SURVEILLANCE CAMERAS INSTALLED IN PARKING AREAS FOR MAXIMUM COVERAGE AND AT ENTRANCES AND EXITS, ELEVATOR WAITING AREAS AND STAIRWELLS. CAMERAS TO RECORD 24 HOURS A DAY, 7 DAYS A WEEK WITH SIGNAGE INDICATING THESE OPERATIONS.
P5	INTERIOR OF PARKING STRUCTURES TO BE PAINTED WHITE TO REFLECT LIGHT AND ADD UP TO 20% MORE LIGHT TO THE INTERIOR SPACE, PURSUANT TO CSP 2.7.4.E.3
P6	REPEATERS/RADIO EQUIPMENT TO BE INSTALLED SO THAT EMERGENCY PERSONNEL CAN RECEIVE/TRANSMIT IN PARKING STRUCTURES, PURSUANT TO 2.7.4.E.3
P7	COMMERCIAL PARKING
P8	TRENCH DRAIN
P9	CONDUIT RISERS ENCASED IN CONCRETE
P10	UNIT CONDENSERS LOCATED ON ROOF
P11	GRILLE WITH DUCT FROM LOWER LEVEL
P12	ACCESSIBLE PARKING SPACES TO HAVE 8'-2" MINIMUM HEIGHT CLEARANCE
P13	17" X 22" SIGN STATING "UNAUTHORIZED VEHICLES PARKED IN DESIGNATED ACCESSIBLE SPACES NOT DISPLAYING DISTINGUISHING PLACARDS OR SPECIAL LICENSE PLATES ISSUED FOR PERSONS WITH DISABILITIES WILL BE TOWED AWAY AT THE OWNER'S EXPENSE. TOWED VEHICLES MAY BE RECLAIMED AT _____ OR BY TELEPHONING _____". LETTERS TO BE MINIMUM 1" HEIGHT.

PLANS LEGEND

101.1	DOOR TYPE SEE SHEET A7.02
101.1	WINDOW TYPE SEE SHEET A7.02
S203	STOREFRONT TYPE REFER TO A7.01
A 6 0	WALL TYPE TAG, REFER TO AD.10
	1-HOUR FIRE BARRIER
	2-HOUR FIRE BARRIER
	WOOD STUD WALL
	CMU WALL
	CONCRETE WALL

NOTE:

- SEE STRUCUTRAL DRAWINGS FOR REQUIRED WALL THICKNESS, STUD SIZE, AND PLYWOOD THICKNESS. STRUCTURAL DRAWINGS TO DICTATE.
- WALL TYPES TYPICAL THROUGHOUT U.N.O.
- SEE ELEVATIONS FOR POSITION OF RAINSCREEN ON EXTERIOR WALLS.

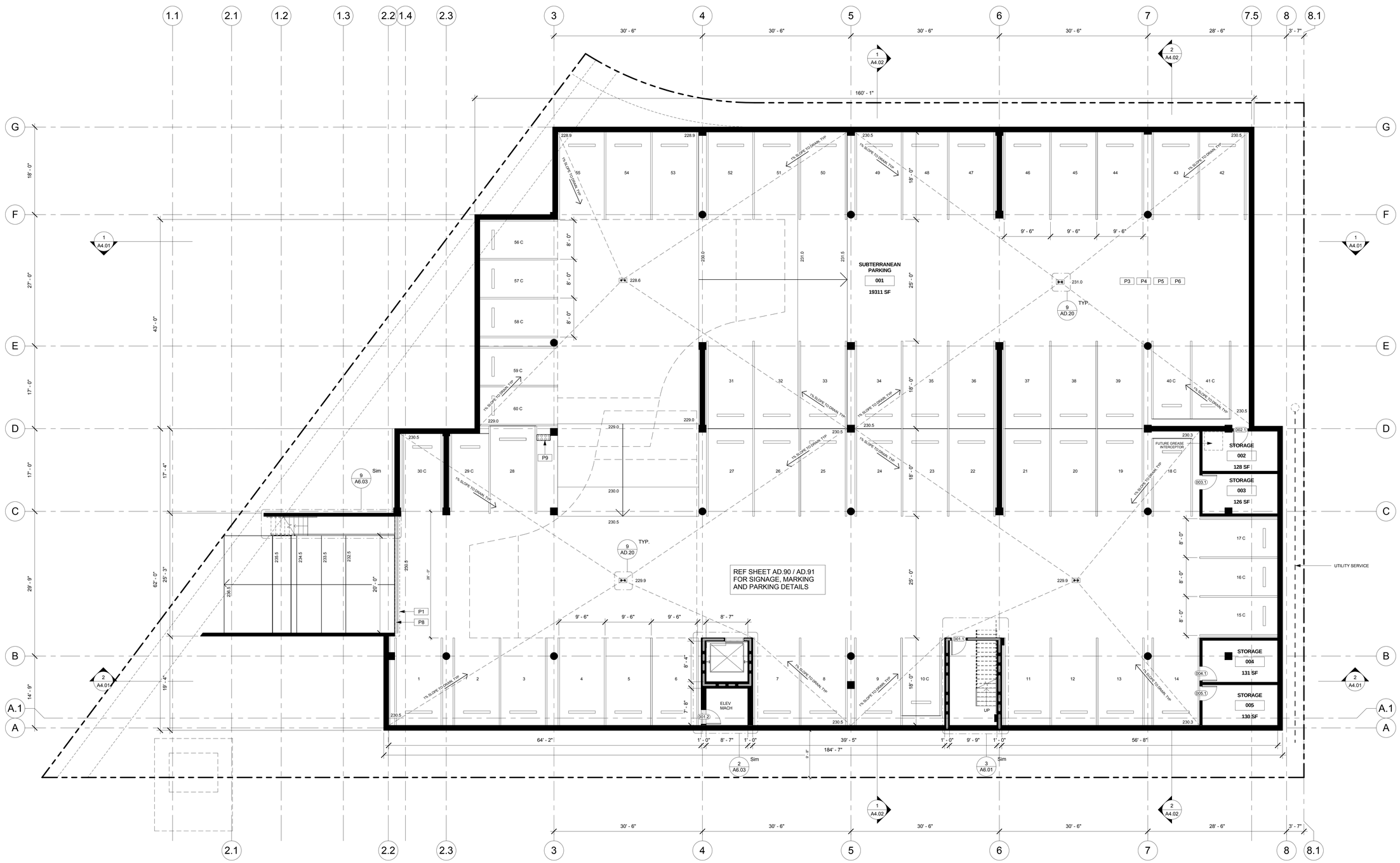

THE ABOVE DRAWINGS AND SPECIFICATIONS AND REPORTS AND DESIGNS CONTAINED HEREIN ARE AND SHALL REMAIN THE PROPERTY OF THE ARCHITECT AND NO PART THEREOF SHALL BE PUBLISHED OR DISTRIBUTED OR USED IN CONNECTION WITH ANY OTHER WORK OR PROJECT OTHER THAN THE SPECIFIC PROJECT FOR WHICH THEY HAVE BEEN PREPARED AND DEVELOPED, WITHOUT THE WRITTEN CONSENT OF THE ARCHITECT. VISUAL CONTACT WITH THESE DRAWINGS OR SPECIFICATIONS SHALL CONSTITUTE CONCLUSIVE EVIDENCE OF ACCEPTANCE OF THESE RESTRICTIONS.

NO.	REVISIONS	DATE
01	PLAN CHECK REVISIONS	06/06/2016

LICENSED ARCHITECT
STEPHEN M. ALBERT
NO. C 9412
REN. 5-31-13
STATE OF CALIFORNIA

1833 N. GAREY AVE.

1833 NORTH GAREY AVENUE
PAMONA, CALIFORNIA 91767

UNDERGROUND PARKING PLAN

the albert group architects
21032 Stomer Ave | Los Angeles, CA 90023 310.919.0303

C.U.P NUMBER:

PROJECT NUMBER: **14130**

PROJECT STATUS: **PLAN CHECK RESUBMITTAL**

ISSUE DATE: **07/18/2016**

SHEET NUMBER: **A2.00**

SUBTERRANEAN PARKING | SCALE: 1/8" = 1'-0" | 1

PARKING TABULATION

PARKING REQUIRED

1 BEDROOM UNITS	13 x 1.5 PER UNIT	20 SPACES
2 BEDROOM UNITS	18 x 2 PER UNIT	36 SPACES
3 BEDROOM UNITS	4 x 2.5 PER UNIT	10 SPACES
GUEST SPACES	35 UNITS X 1.5 PER 10 UNITS*	06 SPACES
TOTAL RESIDENTIAL PARKING		**72 SPACES**
BUSINESS AND PERSONAL SERVICES	6,031 SF / 1000 X 2.5*	16 SPACES MIN
PARKING REDUCTION	-1 SPACE / 200 SF OF ADDITIONAL PUBLIC OPEN SPACE**	**-8 SPACES**
TOTAL VEHICULAR PARKING REQUIRED	***80 SPACES MIN 60 STD 25% CMP MAX (20 SPACES)***	
ADA PARKING: 1 PER 20 STALLS		80 SPACES = 4 REQ'D

PARKING REQUIREMENT PER POMONA CORRIDORS SPECIFIC PLAN
* SHARED PARKING REDUCTION PER PSCP 2.7.1.B
** PUBLIC OPEN SPACE PARKING REDUCTION REDUCTION PER PSCP 2.7.1.C.4
REQUIRED PUBLIC OPEN SPACE= 5,250 SF
PROVIDED PUBLIC OPEN SPACE= 6,988 SF
ADDITIONAL PUBLIC OPEN SPACE = 1,738 SF

PARKING PROVIDED

PARKING GROUND LEVEL - VEHICULAR	27 TOTAL SPACES	21 STD (04 ADA), 6 CMP
PARKING UNDERGROUND - VEHICULAR	60 TOTAL SPACE	46 STD (0 ADA), 14 CMP
TOTAL VEHICULAR PARKING PROVIDED	***87 TOTAL SPACES***	***67 STD*** (04 ADA), ***20 CMP***

PLAN KEY NOTES

P1	OVERHEAD COILING SECURITY GRILLE, PURSUANT TO CSP 2.7.4.A.2
P2	FLOOR TO CEILING SECURITY FENCE, PURSUANT TO CPS 2.7.4.A.2
P3	RESIDENTIAL PARKING
P4	SURVEILLANCE CAMERAS INSTALLED IN PARKING AREAS FOR MAXIMUM COVERAGE AND AT ENTRANCES AND EXITS, ELEVATOR WAITING AREAS AND STAIRWELLS. CAMERAS TO RECORD 24 HOURS A DAY, 7 DAYS A WEEK WITH SIGNAGE INDICATING THESE OPERATIONS.
P5	INTERIOR OF PARKING STRUCTURES TO BE PAINTED WHITE TO REFLECT LIGHT AND ADD UP TO 20% MORE LIGHT TO THE INTERIOR SPACE, PURSUANT TO CSP 2.7.4.E.3.
P6	REPEATERS/RADIO EQUIPMENT TO BE INSTALLED SO THAT EMERGENCY PERSONNEL CAN RECEIVE/TRANSMIT IN PARKING STRUCTURES, PURSUANT TO 2.7.4.E.3.
P7	COMMERCIAL PARKING
P8	TRENCH DRAIN
P9	CONDUIT RISERS ENCASED IN CONCRETE
P10	UNIT CONDENSERS LOCATED ON ROOF.
P11	GRILLE WITH DUCT FROM LOWER LEVEL
P12	ACCESSIBLE PARKING SPACES TO HAVE 8'-2" MINIMUM HEIGHT CLEARANCE
P13	17" X 22" SIGN STATING "UNAUTHORIZED VEHICLES PARKED IN DESIGNATED ACCESSIBLE SPACES NOT DISPLAYING DISTINGUISHING PLACARDS OR SPECIAL LICENSE PLATES ISSUED FOR PERSONS WITH DISABILITIES WILL BE TOWED AWAY AT THE OWNER'S EXPENSE. TOWED VEHICLES MAY BE RECLAIMED AT _____ OR BY TELEPHONING _____". LETTERS TO BE MINIMUM 1" HEIGHT.

PLANS LEGEND

101.1	DOOR TYPE SEE SHEET A7.02
101.1	WINDOW TYPE SEE SHEET A7.02
S203	STOREFRONT TYPE REFER TO A7.01
A 6 0	WALL TYPE TAG, REFER TO AD.10
	1-HOUR FIRE BARRIER
	2-HOUR FIRE BARRIER
	WOOD STUD WALL
	CMU WALL
	CONCRETE WALL

NOTE:
- SEE STRUCUTRAL DRAWINGS FOR REQUIRED WALL THICKNESS, STUD SIZE, AND PLYWOOD THICKNESS. STRUCTURAL DRAWINGS TO DICTATE.
- WALL TYPES TYPICAL THROUGHOUT U.N.O.
- SEE ELEVATIONS FOR POSITION OF RAINSCREEN ON EXTERIOR WALLS.

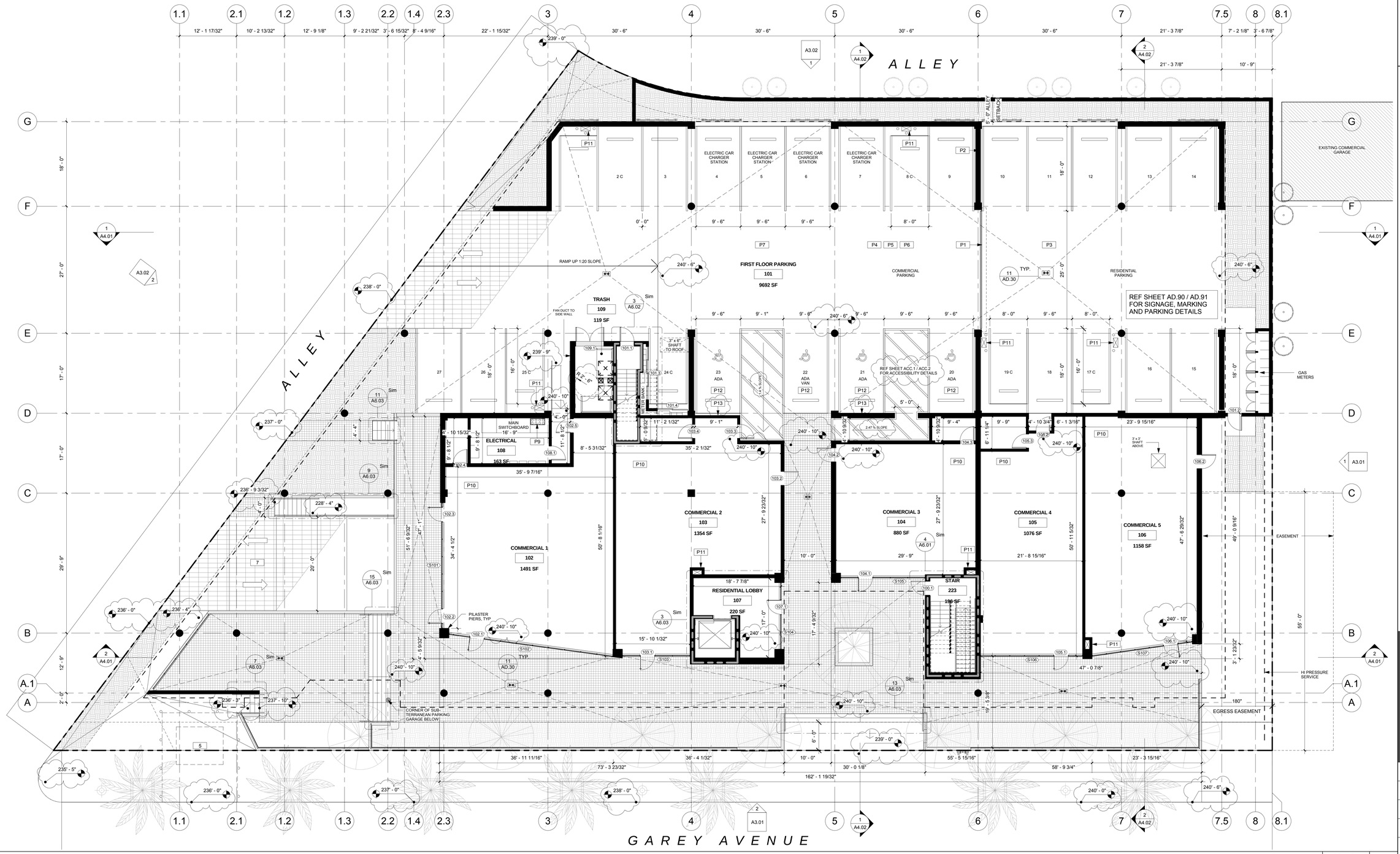

NO.	REVISIONS	DATE
01	PLAN CHECK REVISIONS	06/06/2016

THE ABOVE DRAWINGS AND SPECIFICATIONS AND REPORTS RESULTING THEREFROM, SHALL REMAIN THE PROPERTY OF THE ARCHITECT AND NO PART THEREOF SHALL BE CONVEYED TO ANYONE OR USED IN CONNECTION WITH ANY OTHER WORK OR PROJECT OTHER THAN THE SPECIFIC PROJECT FOR WHICH THEY HAVE BEEN PREPARED AND DEVELOPED, WITHOUT THE WRITTEN CONSENT OF THE ARCHITECT. VISUAL CONTACT WITH THESE DRAWINGS AND SPECIFICATIONS SHALL CONSTITUTE CONCLUSIVE EVIDENCE OF ACCEPTANCE OF THESE RESTRICTIONS.

LICENSED ARCHITECT
STEPHEN M. ALBERT
NO. C 9412
REN. 5-31-13
STATE OF CALIFORNIA

1833 N. GAREY AVE.

1833 NORTH GAREY AVENUE
PAMONA, CALIFORNIA 91767

GROUND FLOOR PLAN

the albert group architects
21052 Stonerf Ave | Los Angeles, CA 90029 (323) 223-2223

C.U.P NUMBER:

PROJECT NUMBER: 14130

PROJECT STATUS: PLAN CHECK RESUBMITTAL

ISSUE DATE: 07/18/2016

SHEET NUMBER: A2.01

1ST FLOOR | SCALE: 1/8" = 1'-0" | 1

PLANS LEGEND

101.1	DOOR TYPE SEE SHEET A7.02
101.1	WINDOW TYPE SEE SHEET A7.02
S203	STOREFRONT TYPE REFER TO A7.01
A 6 0	WALL TYPE TAG, REFER TO AD.10
	1-HOUR FIRE BARRIER
	2-HOUR FIRE BARRIER
	WOOD STUD WALL
	CMU WALL
	CONCRETE WALL

NOTE:

- SEE STRUCUTRAL DRAWINGS FOR REQUIRED WALL THICKNESS, STUD SIZE, AND PLYWOOD THICKNESS. STRUCTURAL DRAWINGS TO DICTATE.
- WALL TYPES TYPICAL THROUGHOUT U.N.O.
- SEE ELEVATIONS FOR POSITION OF RAINSCREEN ON EXTERIOR WALLS.

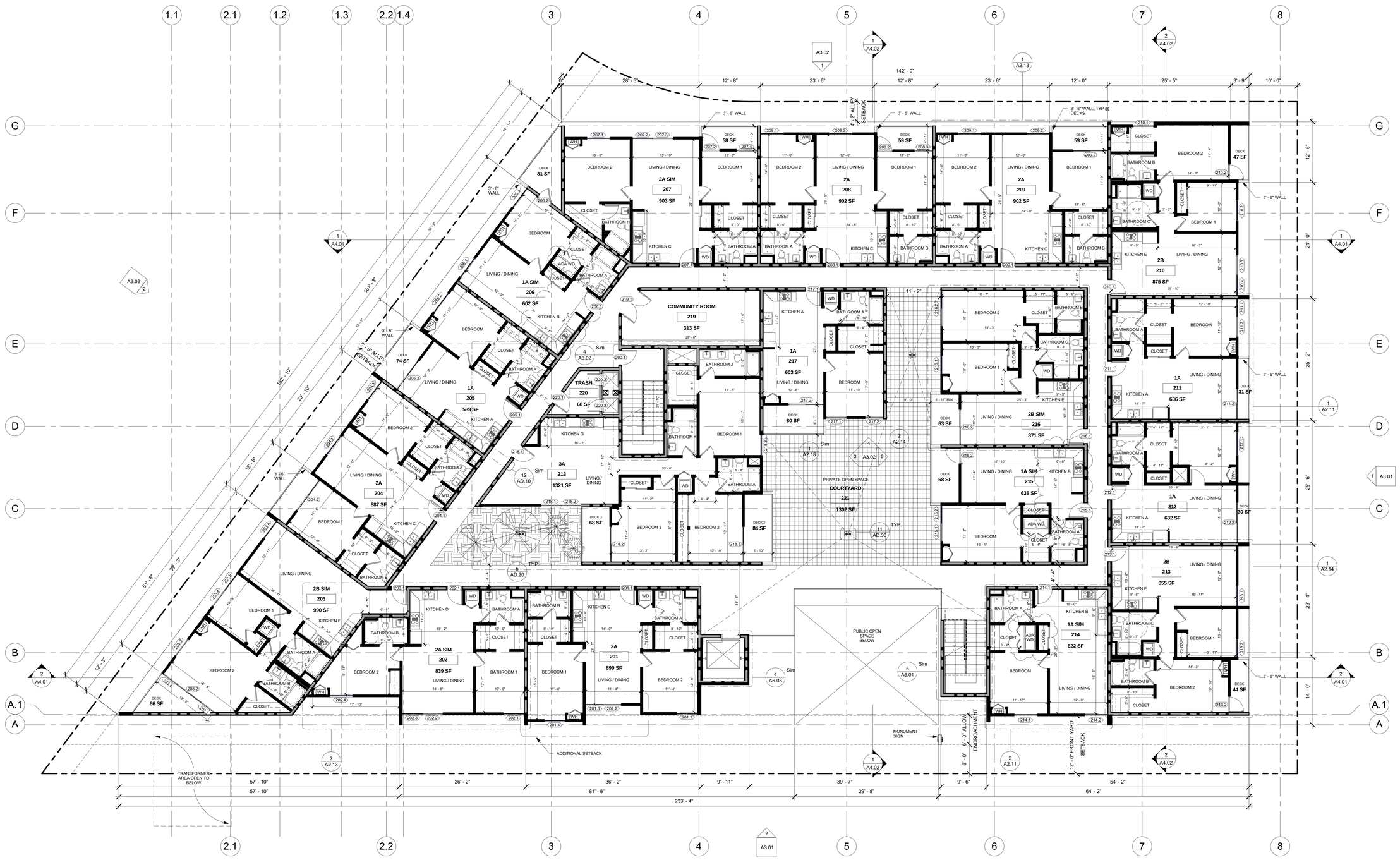

NO.	REVISIONS	DATE
01	PLAN CHECK REVISIONS	06/06/2016

THE ABOVE DRAWINGS AND SPECIFICATIONS AND REPORTS REGARDING THE PROJECT SHALL REMAIN THE PROPERTY OF THE ARCHITECT AND NO PART THEREOF SHALL BE CONVEYED TO ANY OTHER PERSON OR USED IN CONNECTION WITH ANY OTHER WORK OR PROJECT OTHER THAN THE SPECIFIC PROJECT FOR WHICH THEY HAVE BEEN PREPARED AND DEVELOPED, WITHOUT THE WRITTEN CONSENT OF THE ARCHITECT. VISUAL CONTACT WITH THESE DRAWINGS OR SPECIFICATIONS SHALL CONSTITUTE CONCLUSIVE EVIDENCE OF ACCEPTANCE OF THESE RESTRICTIONS.

LICENSED ARCHITECT
STEPHEN M. ALBERT
NO. C 9412
REN. 5-31-13
STATE OF CALIFORNIA

1833 N. GAREY AVE.

1833 NORTH GAREY AVENUE
PAMONA, CALIFORNIA 91767

SECOND FLOOR PLAN

the albert group architects
2657 Sunset Blvd | Los Angeles, CA 90025 310.972.9555

C.U.P NUMBER:

PROJECT NUMBER: 14130

PROJECT STATUS: PLAN CHECK RESUBMITTAL

ISSUE DATE: 07/18/2016

SHEET NUMBER: A2.02

2ND FLOOR | SCALE: 1/8" = 1'-0" | 1

PLANS LEGEND

101.1	DOOR TYPE SEE SHEET A7.02
101.1	WINDOW TYPE SEE SHEET A7.02
S203	STOREFRONT TYPE REFER TO A7.01
A 6 0	WALL TYPE TAG, REFER TO AD.10
	1-HOUR FIRE BARRIER
	2-HOUR FIRE BARRIER
	WOOD STUD WALL
	CMU WALL
	CONCRETE WALL

NOTE:

- SEE STRUCUTRAL DRAWINGS FOR REQUIRED WALL THICKNESS, STUD SIZE, AND PLYWOOD THICKNESS. STRUCTURAL DRAWINGS TO DICTATE.
- WALL TYPES TYPICAL THROUGHOUT U.N.O.
- SEE ELEVATIONS FOR POSITION OF RAINSCREEN ON EXTERIOR WALLS.

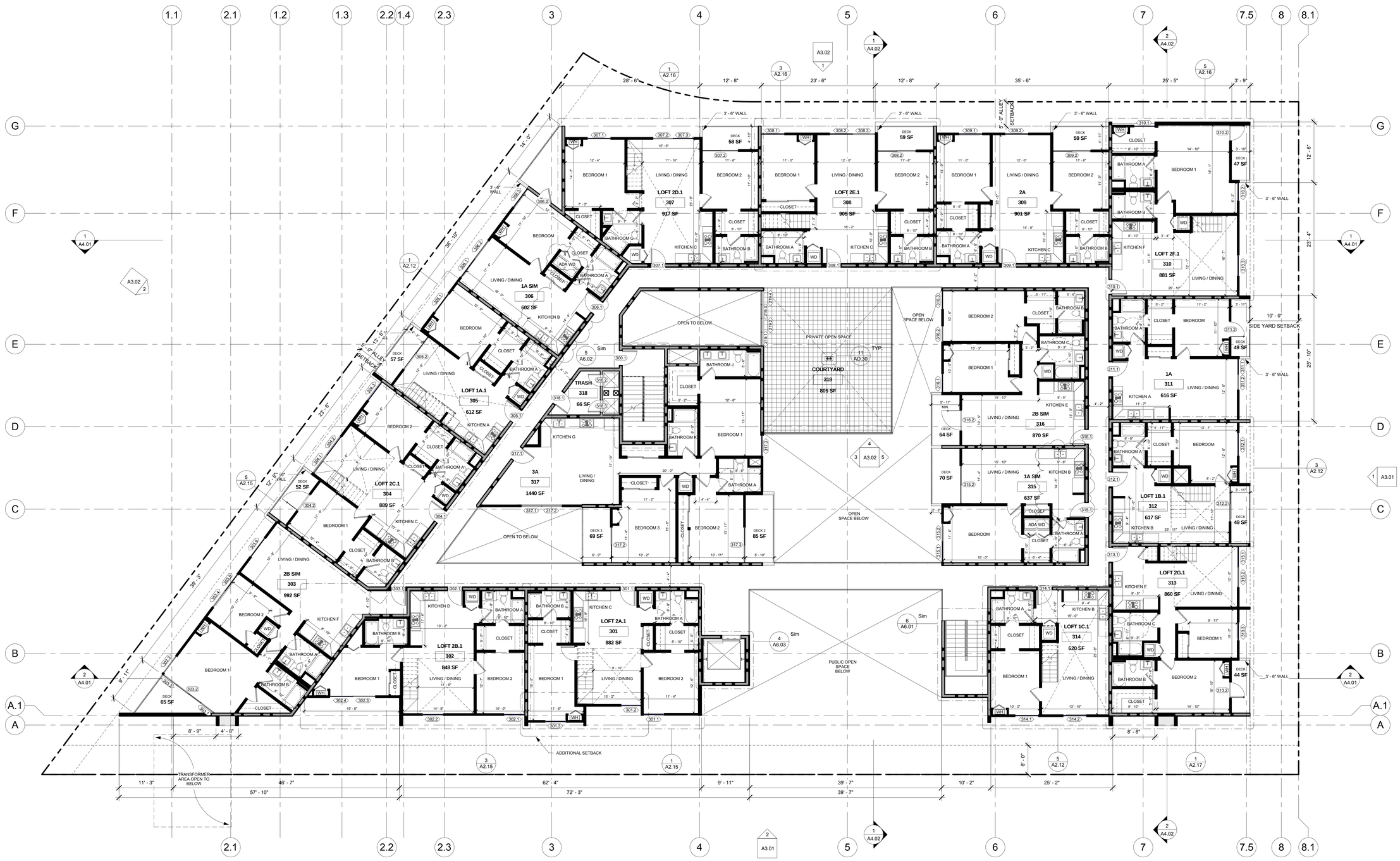

NO.	REVISIONS	DATE
01	PLAN CHECK REVISIONS	06/06/2016

THE ABOVE DRAWINGS AND SPECIFICATIONS AND REPRESENTATIONS HEREIN SHALL REMAIN THE PROPERTY OF THE ARCHITECT AND NO PART THEREOF SHALL BE COPIED, DISCLOSED TO OTHERS OR USED IN CONNECTION WITH ANY OTHER WORK OR PROJECT OTHER THAN THE SPECIFIC PROJECT FOR WHICH THEY HAVE BEEN PREPARED AND DEVELOPED, WITHOUT THE WRITTEN CONSENT OF THE ARCHITECT. VISUAL CONTACT WITH THESE DRAWINGS AND SPECIFICATIONS SHALL CONSTITUTE CONCLUSIVE EVIDENCE OF ACCEPTANCE OF THESE RESTRICTIONS.

LICENSED ARCHITECT
STEPHEN M. ALBERT
NO. C 9412
REN. 5-31-13
STATE OF CALIFORNIA

1833 N. GAREY AVE.

1833 NORTH GAREY AVENUE
PAMONA, CALIFORNIA 91767

THIRD FLOOR PLAN

the albert group architects
2657 Stoner Ave | Los Angeles, CA 90025 310.312.2555

C.U.P NUMBER:

PROJECT NUMBER: 14130

PROJECT STATUS: PLAN CHECK RESUBMITTAL

ISSUE DATE: 07/18/2016

SHEET NUMBER: A2.03

3RD FLOOR | SCALE: 1/8" = 1'-0" | 1

PLANS LEGEND

101.1	DOOR TYPE SEE SHEET A7.02
101.1	WINDOW TYPE SEE SHEET A7.02
S203	STOREFRONT TYPE REFER TO A7.01
A 6 0	WALL TYPE TAG, REFER TO A0.10
	1-HOUR FIRE BARRIER
	2-HOUR FIRE BARRIER
	WOOD STUD WALL
	CMU WALL
	CONCRETE WALL

NOTE:

- SEE STRUCUTRAL DRAWINGS FOR REQUIRED WALL THICKNESS, STUD SIZE, AND PLYWOOD THICKNESS. STRUCTURAL DRAWINGS TO DICTATE
- WALL TYPES TYPICAL THROUGHOUT U.N.O.
- SEE ELEVATIONS FOR POSITION OF RAINSCREEN ON EXTERIOR WALLS.

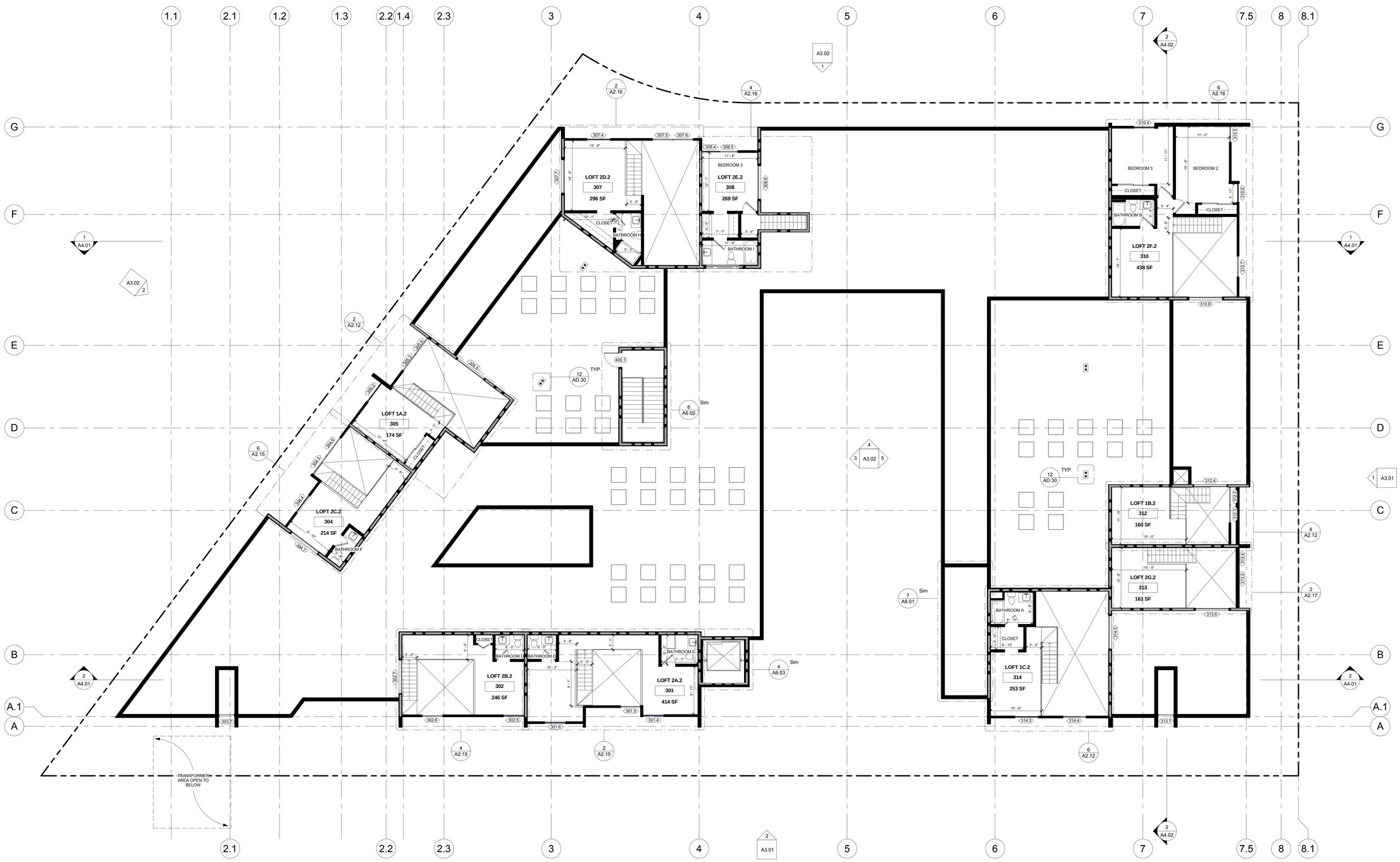

THE ABOVE DRAWINGS AND SPECIFICATIONS AND REPORTS PREPARED BY THE ARCHITECT AND REPRESENTED THEREBY ARE AND SHALL REMAIN THE PROPERTY OF THE ARCHITECT AND NO PART THEREOF SHALL BE COPIED OR DISTRIBUTED OR USED IN CONNECTION WITH ANY OTHER WORK OR PROJECT OTHER THAN THE SPECIFIC PROJECT FOR WHICH THEY HAVE BEEN PREPARED AND DEVELOPED, WITHOUT THE WRITTEN CONSENT OF THE ARCHITECT. VISUAL CONTACT WITH THESE DRAWINGS OR SPECIFICATIONS SHALL CONSTITUTE CONCLUSIVE EVIDENCE OF ACCEPTANCE OF THESE RESTRICTIONS.

NO.	REVISIONS	DATE
01	PLAN CHECK REVISIONS	06/06/2016

LICENSED ARCHITECT
STEPHEN M. ALBERT
NO. C 9412
REN. 5-31-13
STATE OF CALIFORNIA

1833 N. GAREY AVE.

1833 NORTH GAREY AVENUE
PAMONA, CALIFORNIA 91767

LOFT PLAN

the albert group architects
24032 Stonner Ave | Los Angeles, CA 90025 310.473.4488

C.U.P NUMBER:

PROJECT NUMBER: 14130

PROJECT STATUS: PLAN CHECK RESUBMITTAL

ISSUE DATE: 07/18/2016

SHEET NUMBER: A2.04

LOFT | SCALE: 1/8" = 1'-0" | 1

PLANS LEGEND

101.1	DOOR TYPE SEE SHEET A7.02
101.1	WINDOW TYPE SEE SHEET A7.02
S203	STOREFRONT TYPE REFER TO A7.01
A 6 0	WALL TYPE TAG, REFER TO A0.10
	1-HOUR FIRE BARRIER
	2-HOUR FIRE BARRIER
	WOOD STUD WALL
	CMU WALL
	CONCRETE WALL

NOTE:

- SEE STRUCUTRAL DRAWINGS FOR REQUIRED WALL THICKNESS, STUD SIZE, AND PLYWOOD THICKNESS. STRUCTURAL DRAWINGS TO DICTATE.
- WALL TYPES TYPICAL THROUGHOUT U.N.O.
- SEE ELEVATIONS FOR POSITION OF RAINSCREEN ON EXTERIOR WALLS.

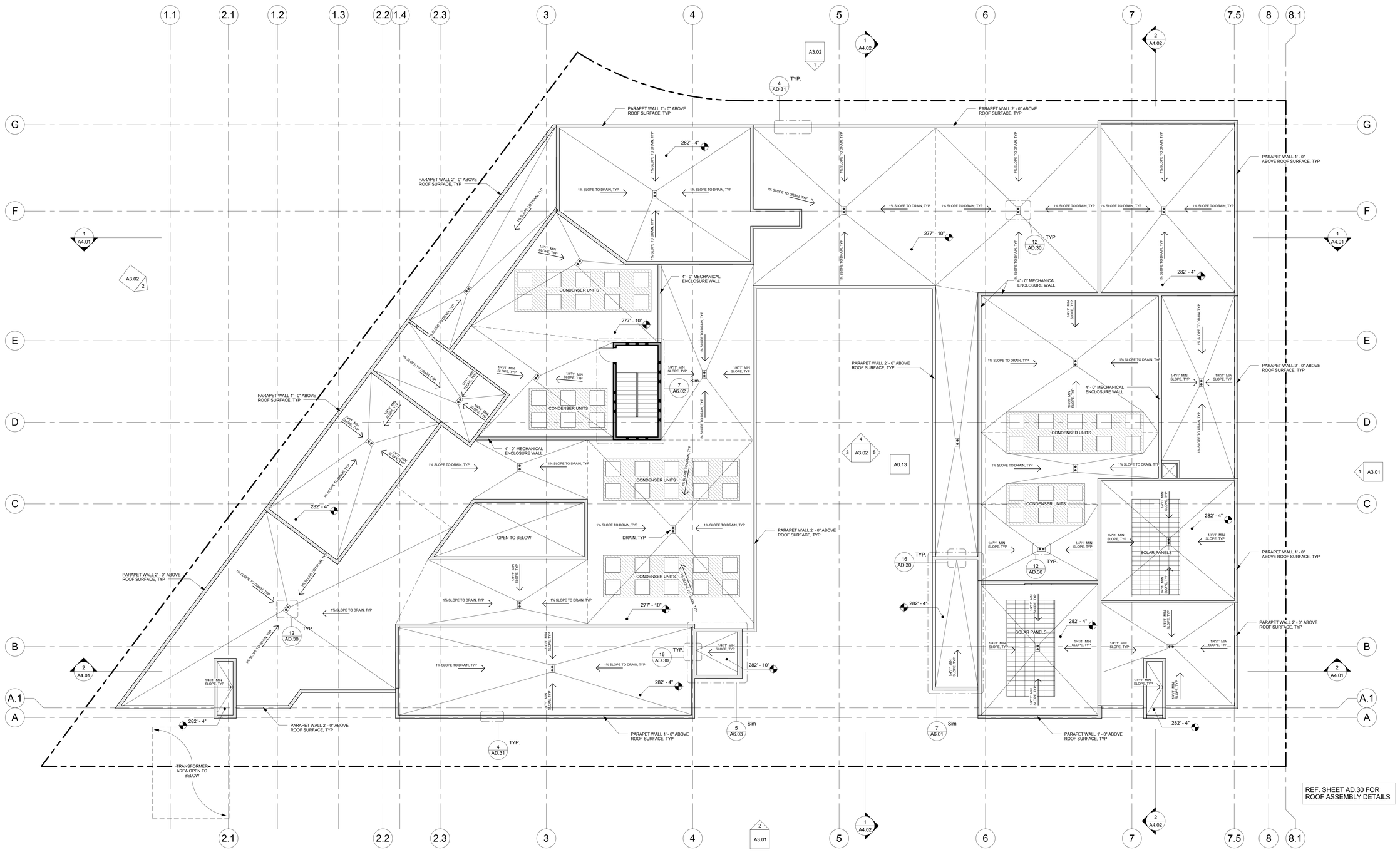

THE ABOVE DRAWINGS AND SPECIFICATIONS AND REPRESENTATIONS THEREIN ARE AND SHALL REMAIN THE PROPERTY OF THE ARCHITECT AND NO PART THEREOF SHALL BE COPIED OR DISTRIBUTED OR USED IN CONNECTION WITH ANY OTHER WORK OR PROJECT OTHER THAN THE SPECIFIC PROJECT FOR WHICH THEY HAVE BEEN PREPARED AND DEVELOPED, WITHOUT THE WRITTEN CONSENT OF THE ARCHITECT. VISUAL CONTACT WITH THESE DRAWINGS OR SPECIFICATIONS SHALL CONSTITUTE CONCLUSIVE EVIDENCE OF ACCEPTANCE OF THESE RESTRICTIONS.

NO.	REVISIONS	DATE
01	PLAN CHECK REVISIONS	06/06/2016

LICENSED ARCHITECT
STEPHEN M. ALBERT
NO. C 9412
REN. 5-31-13
STATE OF CALIFORNIA

1833 N. GAREY AVE.

1833 NORTH GAREY AVENUE
PAMONA, CALIFORNIA 91767

ROOF PLAN

the albert group architects
2032 Stoner Ave | Los Angeles, CA 90025 310.914.9393

C.U.P NUMBER:

PROJECT NUMBER: 14130

PROJECT STATUS: PLAN CHECK RESUBMITTAL

ISSUE DATE: 07/18/2016

SHEET NUMBER: A2.05

ROOF | SCALE: 1/8" = 1'-0" | 1

ENLARGED PLAN KEY NOTES

EP1 REFRIGERATOR. VERIFY W/OWNER SPACE NEEDED PENDING SPECIFICATION.
EP2 SLIDE-IN, COUNTER DEPTH, GAS RANGE.
EP3 RECIRCULATING HOOD.
EP4 CABINET ABOVE, SEE 2AD.80 FOR TYPICAL SECTION
EP5 30" WIDE SINK.
EP6 DISHWASHER
EP7 36" HIGH, STONE TOP COUNTER, TYPICAL @ KITCHENS, SEE 1-5/A0.80 FOR TYPICAL CASEWORK SECTIONS
EP8 GARBAGE DISPOSAL
EP9 PROVIDE MINIMUM TWO 15" WIDE BREADBOARDS OR 30" WIDE WORK SPACE IN EACH KITCHEN.
EP10 30" x 48" APPROACH TO APPLIANCES, TYPICAL.
EP11 RUN FLOORING UNDER CABINET AS REQUIRED FOR A.D.A. ACCESSIBILITY TO REAR WALL. CABINET UNDER SINK TO BE TO BE REMOVABLE PER DISABLED ACCESS, SEE ACCESSIBILITY AND 1/AD.80 FOR TYPICAL SECTION. HOT WATER AND DRAIN PIPES EXPOSED UNDER SINKS SHALL BE INSULATED OR OTHERWISE CONFIGURED SO AS TO PRTECT AGAINST CONTACT. THERE SHALL BE NO SHARP OR ABRASIVE SURFACES UNDER SINKS.
EP12 UNDERMOUNT LAVATORY BASIN.
EP14 WATER CLOSET SHALL BE "ULTRA LOW FLUSH" TYPE TOILET: MAX. 1.28 GAL/FLUSH (4.8 LITERS)
EP15 LIGHT/EXHAUST FAN COMBINATION TO PROVIDE A MIN. 5 AIR CHANGES PER HOUR. BATHROOM EXHAUST FANS TO BE ENERGY STAR COMPLIANT AND CONTROLLED BY A HUMIDISTAT WHICH SHALL BE READILY ACCESSIBLE.
EP16 34" HIGH MAX STONE COUNTER TOP AT BATHROOMS.
EP18 LOCATION OF POSSIBLE FUTURE SWING AWAY GRAB BAR, TYPICAL
EP19 HANDICAP GRAB BAR BACKING, TYPICAL, SEE DETAILS 8/HC.7
EP20 66"x30" TUB / SHOWER COMBINATION, CERAMIC TILE SURROUND W/SLIDING SHOWER ENCLOSURE. VERIFY TILE LAYOUT WITH ARCHITECT.
EP22 SHATTERPROOF SHOWER ENCLOSURE, VERIFY HEIGHT AND FRAME DESIGN. SHOWER THRESHOLD @ 2" MAXIMUM HEIGHT @ 1:2

ENLARGED PLAN KEY NOTES

EP23 THRESHOLD AT 3/4" MAXIMUM HEIGHT AT 1:2 HORIZONTAL BEVELED PER SECTION 1132A.4.1.
EP24 30" x 48" APPROACH SPACES AT SINK, SHOWER AND TUB
EP25 36" x 48" APPROACH SPACE AT WATER CLOSET, UNLESS WHERE 36" x 36" IS PERMITTED PER 1134A.7.1. EXCEPTION
EP26 FRONT LOAD ADA COMPLIANT WASHER, VENTED TO EXTERIOR AS REQUIRED BY MECHANICAL CODE.
EP27 FRONT LOAD STACK WASHER AND DRYER, VENTED TO EXTERIOR AS REQUIRED BY MECHANICAL CODE.
EP28 FRONT LOAD ADA COMPLIANT DRYER, VENTED TO EXTERIOR AS REQUIRED BY MECHANICAL CODE.
EP29 HARDWIRED SMOKE DETECTOR, TYPICAL THROUGHOUT. PROVIDE APPROVED, INTERCONNECTED HARDWIRED CARBON MONOXIDE ALARM/DETECTORS WITH BATTERY BACK-UP IN HALLWAYS AND BEDROOMS.
EP30 MINIMUM CLASS "B" RATED ELASTOMERIC DECK COATING SLOPED FOR PROPER DRAINAGE, ICC# ER-5019.
EP31 42" HIGH GUARDRAIL OR GUARDRAIL WALL.
EP33 LINE OF FLOOR ABOVE.
EP34 SHELF AND POLE.
EP35 AREA OF BALCONY / PATIO, 2% MAX SLOPE, TYPICAL. VERIFY LAYOUT WITH OVERALL PLANS.
EP36 DOOR / WINDOW SHALL PROVIDE AN OPENABLE MEANS OF EGRESS WITH A MAXIMUM SILL HEIGHT NOT MORE THAN 44" ABOVE FINISHED FLOOR. SEE GN-3 / V-1.
EP37 48"x60" MINIMUM CLEAR FOR SIDE APPROACH, 60"x60" MINIMUM CLEAR FOR FRONT APPROACH, AT ENTRY TO UNITS, TYP.
EP39 ROUND EXHAUST TERMINAL, SEE ELVATION.
EP42 34" x 84" ACCESS PANEL, FOR ACCESSING AND SERVICING FCU AND DUCTWORK FOR MEZZANINE UNITS
EP46 TANKLESS WATER HEATER WITH LOUVER AND ACCESS PANEL

ENLARGED PLAN GENERAL NOTES

A. ALL EXTERIOR WALLS TO BE X1.6.1 U.O.N. (EXCEPT WHEN NOTED)
B. ALL INTERIOR WALLS TO BE A4.0 U.O.N. (EXCEPT WHEN NOTED)
C. CEILING HEIGHTS ARE MEASURED FROM TOP OF SUB FLOOR, TYP.
D. GUARDRAIL CONSTRUCTION SHALL BE CAPABLE OF RESISTING A 20 PLF HORIZONTAL LOAD PERPENDICULAR TO THE TOP RAIL PER 2010 C.B.C., SECTION 1607.7
E. PROVIDE WINDOWS SIZED FOR EMERGENCY ESCAPE AND RESUCUE COMPLIANCE AT ALL SLEEPING ROOMS, WITH MIN NET CLEAR OPENING OF 5.7 SF AND SILL HEIGHT NOT MORE THAN 44" ABOVE THE FLOOR AND OPEN DIRECTLY TO STREETS, PUBLIC ALLEYS, YARDS OR EXIT COURTS.
F. DRAFTSTOPS SHALL BE INSTALLED IN CONCEALED FLOOR AND ATTIC SPACES. DRAFTSTOPS SHALL BE INSTALLED IN LINE WITH DWELLING UNIT AND SLEEPING AREA SEPERATIONS, AND CONSTRUCTED PER 2010 C.B.C.
G. FIRE BLOCKING SHALL BE PROVIDED IN THE FOLLOWING:
   1. IN CONCEALED PLACES OF STUD WALLS AND PARTITIONS, INCLUDING FURRED SPACES, AT CEILINGS AND FLOOR LEVEL AND AT 10' INTERVALS, BOTH VERTICAL AND HORIZONTAL, PER CBC SECTION 803.
   2. AT ALL INTER-CONNECTIONS BETEEN CONCEALED VERTICAL AND HORIZONTAL SPACES SUCH AS SOFFITS, DROP AND COVED CEILINGS.
   3. IN CONCEALED SPACES BETWEEN STAIR STRINGERS AT THE TOP AND BOTTOM OF THE RUN AND BETWEEN STUDS ALONG AND IN LINE WITH THE RUN OF THE STAIRS IF THE WALLS UNDER THE STAIRS ARE UNFINISHED.
I. ALL GLAZING TO BE TEMPERED INCLUDING SHOWER/BATHTUB DOORS AND SHALL BE AFFIXED WITH A PERMANENT LABEL.
K. ALL DOORS TO HAVE A MIN 32" CLEAR DIMENSION.
L. MAXIMUM 1/2" ELEVATION DIFFERENCE AT DOOR THRESHOLDS
M. PROVIDE 24" CLEAR FROM STRIKE SIDE OF SWINGING DOOR AT PULL SIDE AND 12" AT PUSH SIDE OF ALL EXTERIOR UNIT DOORS.PROVIDE 18" CLEAR FROM STRIKE SIDE OF SWINGING DOOR AT PULL SIDE AND 12" AT PUSH SIDE OF ALL INTERIOR UNIT DOORS.
N. INTERIOR DOOR FINISHES SHALL COMPLY WITH SECTION 10.2.7 OF NFPA 101 AND SECTION 804 OF C.B.C.
O. NON-ABSORBENT INTERIOR FLOOR AND WALL FINISHES WITHIN 2' AROUND AND PERPINDICULAR TO EXTERIOR ENTRIES AND/OR OPENINGS SUBJECT TO FOOT TRAFFIC (5.407.2.2)
P. OCCUPIABLE SPACES, HABITABLE SPACES, AND CORRIDORS SHALL HAVE A CEILING HEIGH OF NOT LESS THAN 7'. 6". BATHROOMS, TOILET ROOMS, KITCHENS, STORAGE ROOMS AND LAUNDRY ROOMS SHALL BE PERMITTED TO HAVE A CEILING HEIGHT OF NOT LESS THAN 7' (1208.2). ANY ROOM WITH A FURRED CEILING SHALL BE REQUIRED TO HAVE THE MINIMUM CEILING HEIGHT IN TWO-THIRDS OF THE AREA THEREOF, BUT IN NO CASE SHALL THE HEIGHT OF THE FURRED CEILING BE LESS THAN 7'.
Q. THE FLOW RATES FOR ALL PLUMBING FIXTURES SHALL COMPLY WITH THE MAXIMUM FLOW RATES IN TABLE 4.303.1.
R. ACOUSTICAL SOUND PADS ARE REQUIRED ON ALL ELECTRICAL & LV BOXES MOUNTED IN THE CEILINGS.
S. WHEN A SHOWER IS SERVED BY MORE THAN ONE SHOWERHEAD, THE COMINED FLOW RATE OF ALL THE SHOWERHEADS AND/OR OTHER OUTLETS CONTROLLED BY A SINGLE VALVE SHALL NOT EXCEED 2.0 GALLONS PER MINUTE AT 80 PSI, OR THE SHOWER SHALL BE DESIGNED TO ONLY ALLOW ONE SHOWERHEAD TO BE IN OPERATION AT A TIME.

LEGEND

A 6.0	WALL TYPE TAG, REFER TO AD.10
	DUCT SOFFIT @ 7'-10" (7'-6" MIN.)
	1-HOUR FIRE BARRIER
	2-HOUR FIRE BARRIER
	BATHROOM EXHAUST: ENERGY STAR COMPLIANT; DUCTED TO TERMINATE OUTSIDE THE BUILDING. FANS NOT FUNCTIONING AS A COMPONENT OF A WHOLE UNIT VENTILATION SYSTEM MUST BE HUMIDITY CONTROLLED
S	SMOKE DETECTOR
C	CARBON MONOXIDE DETECTOR

RESIDENTIAL DOOR SCHEDULE

ABBREVIATIONS

*	DENOTES EGRESS	EXT	EXTERIOR	SF	STORE FRONT
ALUM	ALUMINUM	FX	FIXED	SG	SINGLE GLAZED
BF	BI-FOLDING	HC	HOLLOW CORE	SGD	SLIDING GLASS DR
CA	CASEMENT	HM	HOLLOW METAL	SL	SINGLE
CLR	CLEAR ANODIZED	INT	INTERIOR	SL	SLIDER
DB	DOUBLE	PF	PAINTED FINISH	SWG	SWING
DG	DUAL GLAZED	RG	REEDED GLASS	TG	TEMPERED GLASS
ENT	ENTRY	SC	SOLID CORE	WD	WOOD

HARDWARE GROUPS

1. MORTISE ENTRY W/ DEADBOLT
2. CYLINDER W/ PRIVACY THUMB TURN
3. CYLINDER PASSAGE
4. FINGER PULL

NO.	OPERATION	TYPE	SIZE	DETAIL REF	HDWRE
D.01	SI	WD SC	2' 10" x 7' 0"	3 | AD.50; 4 | AD50	2
D.02	BF	WD HC	2' 8" x 7' 0"	3 | AD.50; 5 | AD.50; 6 | AD.50	4
D.03	SL	WD HC	4' 8" x 7' 0"	3 | AD.50; 7 | AD.50; 8 | AD.50	4
D.04	SL	WD HC	6' 6" x 7' 0"	3 | AD.50; 7 | AD.50; 8 | AD.50	4
D.05	SL	WD HC	9' 0" x 7' 0"	3 | AD.50; 7 | AD.50; 8 | AD.50	4

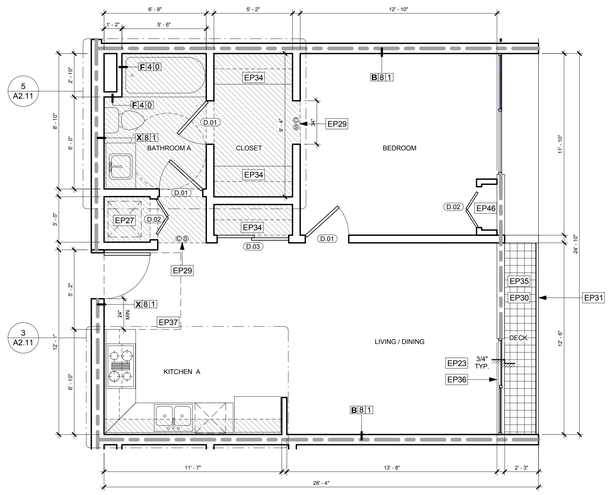

UNIT TYPE 1A (UNIT 205-211-212-217-311) | SCALE: 1/4" = 1'-0" | 1

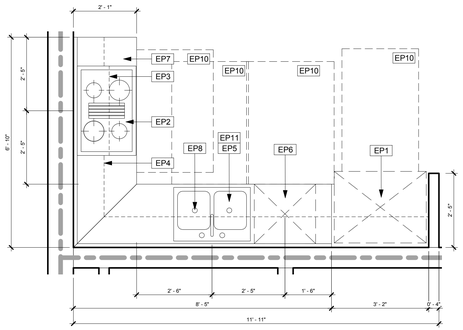

KITCHEN A - UNIT TYPE 1A / LOFT 1A | SCALE: 1/2" = 1'-0" | 3

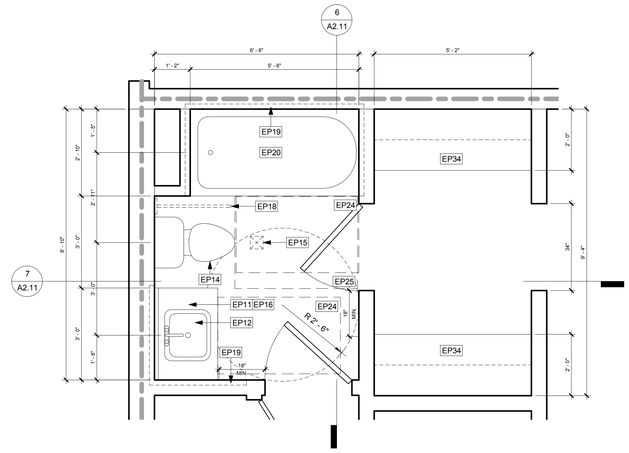

BATHROOM A - ALL UNITS & LOFTS | SCALE: 1/2" = 1'-0" | 5

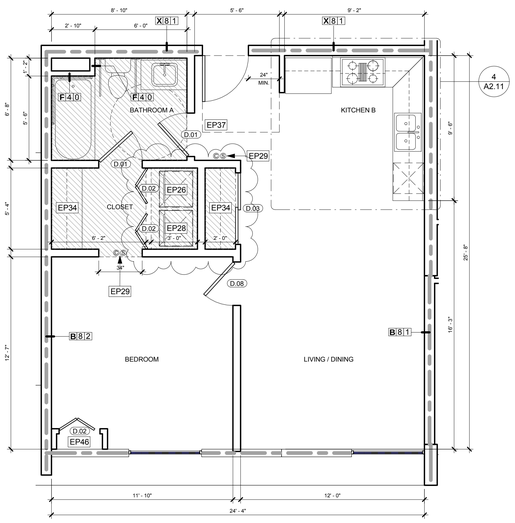

UNIT TYPE 1A SIM (UNIT 206-214-215-306-315) | SCALE: 1/4" = 1'-0" | 2

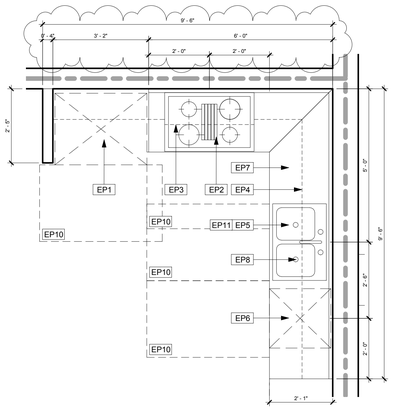

KITCHEN B - UNIT TYPE 1A SIM / LOFT 1B / 1C | SCALE: 1/2" = 1'-0" | 4

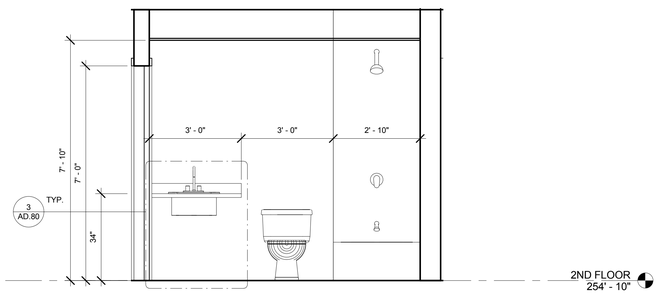

TYPICAL BATHROOM ELEVATION I | SCALE: 1/2" = 1'-0" | 6

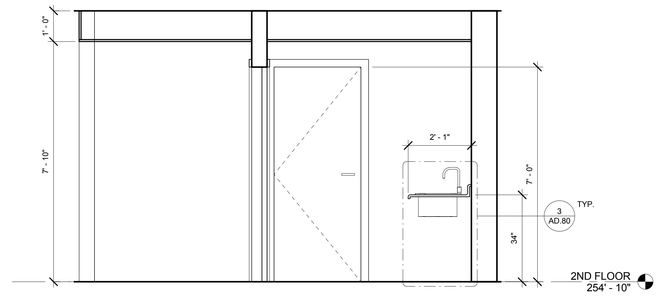

TYPICAL BATHROOM ELEVATION II | SCALE: 1/2" = 1'-0" | 7

NO.	REVISIONS	DATE
01	PLAN CHECK REVISIONS	06/06/2016

THE ABOVE DRAWINGS AND SPECIFICATIONS AND REPORTS CONTAINED HEREIN, AS WELL AS THE PROPERTY OF THE ARCHITECT AND NO PART THEREOF SHALL BE REPRODUCED OR USED OR USED IN CONNECTION WITH ANY OTHER WORK OR PROJECT OTHER THAN THE SPECIFIC PROJECT FOR WHICH THEY HAVE BEEN PREPARED OR DEVELOPED, WITHOUT THE WRITTEN CONSENT OF THE ARCHITECT. VISUAL CONTACT WITH THESE DRAWINGS AND SPECIFICATIONS DOES NOT CONSTITUTE CONCLUSIVE EVIDENCE OF ACCEPTANCE OF THESE RESTRICTIONS.

LICENSED ARCHITECT
STEPHEN M. ALBERT
NO. C 9412
REN. 5-31-13
STATE OF CALIFORNIA

1833 N. GAREY AVE.

1833 NORTH GAREY AVENUE
PAMONA, CALIFORNIA 91767

ENLARGED 1 BEDROOM UNITS

the albert group architects
2012 Stoner Ave | Los Angeles, CA 90025 310.914.9555

C.U.P NUMBER:

PROJECT NUMBER: 14130

PROJECT STATUS: PLAN CHECK RESUBMITTAL

ISSUE DATE: 07/18/2016

SHEET NUMBER: A2.11

ENLARGED PLAN KEY NOTES

EP1 REFRIGERATOR. VERIFY W/OWNER SPACE NEEDED PENDING SPECIFICATION.
EP2 SLIDE-IN, COUNTER DEPTH, GAS RANGE.
EP3 RECIRCULATING HOOD.
EP4 CABINET ABOVE, SEE 2|AD.80 FOR TYPICAL SECTION
EP5 30" WIDE SINK.
EP6 DISHWASHER
EP7 36" HIGH, STONE TOP COUNTER, TYPICAL @ KITCHENS, SEE 1-5|AD.80 FOR TYPICAL CASEWORK SECTIONS
EP8 GARBAGE DISPOSAL
EP9 PROVIDE MINIMUM TWO 15" WIDE BREADBOARDS OR 30" WIDE WORK SPACE IN EACH KITCHEN.
EP10 30" x 48" APPROACH TO APPLIANCES, TYPICAL.
EP11 RUN FLOORING UNDER CABINET AS REQUIRED FOR A.D.A. ACCESSIBILITY TO REAR WALL. CABINET UNDER SINK TO BE TO BE REMOVABLE PER DISABLED ACCESS, SEE ACCESSIBILITY AND 1|AD.80 FOR TYPICAL SECTION. HOT WATER AND DRAIN PIPES EXPOSED UNDER SINKS SHALL BE INSULATED OR OTHERWISE CONFIGURED SO AS TO PRTECT AGAINST CONTACT. THERE SHALL BE NO SHARP OR ABRASIVE SURFACES UNDER SINKS.
EP12 UNDERMOUNT LAVATORY BASIN.
EP14 WATER CLOSET SHALL BE "ULTRA LOW FLUSH" TYPE TOILET: MAX. 1.28 GAL/FLUSH (4.8 LITERS)
EP15 LIGHT/EXHAUST FAN COMBINATION TO PROVIDE A MIN. 5 AIR CHANGES PER HOUR. BATHROOM EXHAUST FANS TO BE ENERGY STAR COMPLIANT AND CONTROLLED BY A HUMIDISTAT WHICH SHALL BE READILY ACCESSIBLE.
EP16 34" HIGH MAX STONE COUNTER TOP AT BATHROOMS.
EP18 LOCATION OF POSSIBLE FUTURE SWING AWAY GRAB BAR, TYPICAL
EP19 HANDICAP GRAB BAR BACKING, TYPICAL, SEE DETAILS 8|HC.7
EP20 66"x30" TUB / SHOWER COMBINATION, CERAMIC TILE SURROUND W/SLIDING SHOWER ENCLOSURE. VERIFY TILE LAYOUT WITH ARCHITECT.
EP22 SHATTERPROOF SHOWER ENCLOSURE, VERIFY HEIGHT AND FRAME DESIGN. SHOWER THRESHOLD @ 2" MAXIMUM HEIGHT @ 1:2

ENLARGED PLAN KEY NOTES

EP23 THRESHOLD AT 3/4" MAXIMUM HEIGHT AT 1:2 HORIZONTAL BEVELED PER SECTION 1132A.4.1.
EP24 30" x 48" APPROACH SPACES AT SINK, SHOWER AND TUB
EP25 36" x 48" APPROACH SPACE AT WATER CLOSET, UNLESS WHERE 36" x 36" IS PERMITTED PER 1134A.7.1. EXCEPTION
EP26 FRONT LOAD ADA COMPLIANT WASHER, VENTED TO EXTERIOR AS REQUIRED BY MECHANICAL CODE.
EP27 FRONT LOAD STACK WASHER AND DRYER, VENTED TO EXTERIOR AS REQUIRED BY MECHANICAL CODE.
EP28 FRONT LOAD ADA COMPLIANT DRYER, VENTED TO EXTERIOR AS REQUIRED BY MECHANICAL CODE.
EP29 HARDWIRED SMOKE DETECTOR, TYPICAL THROUGHOUT. PROVIDE APPROVED, INTERCONNECTED HARDWIRED CARBON MONOXIDE ALARM/DETECTORS WITH BATTERY BACK-UP IN HALLWAYS AND BEDROOMS.
EP30 MINIMUM CLASS "B" RATED ELASTOMERIC DECK COATING SLOPED FOR PROPER DRAINAGE, ICC# ER-5019.
EP31 42" HIGH GUARDRAIL OR GUARDRAIL WALL.
EP33 LINE OF FLOOR ABOVE.
EP34 SHELF AND POLE.
EP35 AREA OF BALCONY / PATIO, 2% MAX SLOPE, TYPICAL. VERIFY LAYOUT WITH OVERALL PLANS.
EP36 DOOR / WINDOW SHALL PROVIDE AN OPENABLE MEANS OF EGRESS WITH A MAXIMUM SILL HEIGHT NOT MORE THAN 44" ABOVE FINISHED FLOOR. SEE GN-3 / V-1.
EP37 48"x60" MINIMUM CLEAR FOR SIDE APPROACH, 60"x60" MINIMUM CLEAR FOR FRONT APPROACH, AT ENTRY TO UNITS, TYP.
EP39 ROUND EXHAUST TERMINAL, SEE ELVATION.
EP42 34" x 84" ACCESS PANEL, FOR ACCESSING AND SERVICING FCU AND DUCTWORK FOR MEZZANINE UNITS
EP46 TANKLESS WATER HEATER WITH LOUVER AND ACCESS PANEL

ENLARGED PLAN GENERAL NOTES

A. ALL EXTERIOR WALLS TO BE X 61 U.O.N. (EXCEPT WHEN NOTED)
B. ALL INTERIOR WALLS TO BE A 40 U.O.N. (EXCEPT WHEN NOTED)
C. CEILING HEIGHTS ARE MEASURED FROM TOP OF SUB FLOOR, TYP.
D. GUARDRAIL CONSTRUCTION SHALL BE CAPABLE OF RESISTING A 20 PLF HORIZONTAL LOAD PERPENDICULAR TO THE TOP RAIL PER 2010 C.B.C., SECTION 1607.7
E. PROVIDE WINDOWS SIZED FOR EMERGENCY ESCAPE AND RESUCUE COMPLIANCE AT ALL SLEEPING ROOMS, WITH MIN NET CLEAR OPENING OF 5.7 SF AND SILL HEIGHT NOT MORE THAN 44" ABOVE THE FLOOR AND OPEN DIRECTLY TO STREETS, PUBLIC ALLEYS, YARDS OR EXIT COURTS.
F. DRAFTSTOPS SHALL BE INSTALLED IN CONCEALED FLOOR AND ATTIC SPACES. DRAFTSTOPS SHALL BE INSTALLED IN LINE WITH DWELLING UNIT AND SLEEPING AREA SEPERATIONS, AND CONSTRUCTED PER 2010 C.B.C.
G. FIRE BLOCKING SHALL BE PROVIDED IN THE FOLLOWING:
  1. IN CONCEALED PLACES OF STUD WALLS AND PARTITIONS, INCLUDING FURRED SPACES, AT CEILINGS AND FLOOR LEVEL AND AT 10' INTERVALS, BOTH VERTICAL AND HORIZONTAL, PER CBC SECTION 803.
  2. AT ALL INTER-CONNECTIONS BETEEN CONCEALED VERTICAL AND HORIZONTAL SPACES SUCH AS SOFFITS, DROP AND COVED CEILINGS.
  3. IN CONCEALED SPACES BETWEEN STAIR STRINGERS AT THE TOP AND BOTTOM OF THE RUN AND BETWEEN STUDS ALONG AND IN LINE WITH THE RUN OF THE STAIRS IF THE WALLS UNDER THE STAIRS ARE UNFINISHED.
I. ALL GLAZING TO BE TEMPERED INCLUDING SHOWER/BATHTUB DOORS AND SHALL BE AFFIXED WITH A PERMANENT LABEL.
K. ALL DOORS TO HAVE A MIN 32" CLEAR DIMENSION.
L. MAXIMUM 1/2" ELEVATION DIFFERENCE AT DOOR THRESHOLDS
M. PROVIDE 24" CLEAR FROM STRIKE SIDE OF SWINGING DOOR AT PULL SIDE AND 12" AT PUSH SIDE OF ALL EXTERIOR UNIT DOORS.PROVIDE 18" CLEAR FROM STRIKE SIDE OF SWINGING DOOR AT PULL SIDE AND 12" AT PUSH SIDE OF ALL INTERIOR UNIT DOORS.
N. INTERIOR DOOR FINISHES SHALL COMPLY WITH SECTION 10.2.7 OF NFPA 101 AND SECTION 804 OF C.B.C.
O. NON-ABSORBENT INTERIOR FLOOR AND WALL FINISHES WITHIN 2' AROUND AND PERPINDICULAR TO EXTERIOR ENTRIES AND/OR OPENINGS SUBJECT TO FOOT TRAFFIC (5.407.2.2)
P. OCCUPIABLE SPACES, HABITABLE SPACES, AND CORRIDORS SHALL HAVE A CEILING HEIGH OF NOT LESS THAN 7' - 6". BATHROOMS, TOILET ROOMS, KITCHENS, STORAGE ROOMS AND LAUNDRY ROOMS SHALL BE PERMITTED TO HAVE A CEILING HEIGHT OF NOT LESS THAN 7' (1208.2). ANY ROOM WITH A FURRED CEILING SHALL BE REQUIRED TO HAVE THE MINIMUM CEILING HEIGHT IN TWO-THIRDS OF THE AREA THEREOF, BUT IN NO CASE SHALL THE HEIGHT OF THE FURRED CEILING BE LESS THAN 7'.
Q. THE FLOW RATES FOR ALL PLUMBING FIXTURES SHALL COMPLY WITH THE MAXIMUM FLOW RATES IN TABLE 4.303.1.
R. ACOUSTICAL SOUND PADS ARE REQUIRED ON ALL ELECTRICAL & LV BOXES MOUNTED IN THE CEILINGS.
S. WHEN A SHOWER IS SERVED BY MORE THAN ONE SHOWERHEAD, THE COMINED FLOW RATE OF ALL THE SHOWERHEADS AND/OR OTHER OUTLETS CONTROLLED BY A SINGLE VALVE SHALL NOT EXCEED 2.0 GALLONS PER MINUTE AT 80 PSI, OR THE SHOWER SHALL BE DESIGNED TO ONLY ALLOW ONE SHOWERHEAD TO BE IN OPERATION AT A TIME.

LEGEND

A 6 0 — WALL TYPE TAG, REFER TO AD.10
DUCT SOFFIT @ 7'-10" (7'-6" MIN.)
1-HOUR FIRE BARRIER
2-HOUR FIRE BARRIER
BATHROOM EXHAUST: ENERGY STAR COMPLIANT, DUCTED TO TERMINATE OUTSIDE THE BUILDING. FANS NOT FUNCTIONING AS A COMPONENT OF A WHOLE UNIT VENTILATION SYSTEM MUST BE HUMIDITY CONTROLLED
S — SMOKE DETECTOR
C — CARBON MONOXIDE DETECTOR

RESIDENTIAL DOOR SCHEDULE

ABBREVIATIONS

*	DENOTES EGRESS	EXT	EXTERIOR	SF	STORE FRONT		
ALUM	ALUMINUM	FX	FIXED	SG	SINGLE GLAZED		
BF	BI-FOLDING	HC	HOLLOW CORE	SGD	SLIDING GLASS DR		
CA	CASEMENT	HM	HOLLOW METAL	SI	SINGLE		
CLR	CLEAR ANODIZED	INT	INTERIOR	SL	SLIDER		
DB	DOUBLE	PF	PAINTED FINISH	SWG	SWING		
DG	DUAL GLAZED	RG	REEDED GLASS	TG	TEMPERED GLASS		
ENT	ENTRY	SC	SOLID CORE	WD	WOOD		

HARDWARE GROUPS

1. MORTISE ENTRY W/ DEADBOLT
2. CYLINDER W/ PRIVACY THUMB TURN
3. CYLINDER PASSAGE
4. FINGER PULL

NO.	OPERATION	TYPE	SIZE	DETAIL REF	HDWRE
D.01	SI	WD SC	2' 10" x 7' 0"	3 | AD.50; 4 | AD50	2
D.02	BF	WD HC	2' 8" x 7' 0"	3 | AD.50; 5 | AD.50; 6 | AD.50	4
D.03	SL	WD HC	4' 8" x 7' 0"	3 | AD.50; 7 | AD.50; 8 | AD.50	4
D.04	SL	WD HC	6' 6" x 7' 0"	3 | AD.50; 7 | AD.50; 8 | AD.50	4
D.05	SL	WD HC	9' 0" x 7' 0"	3 | AD.50; 7 | AD.50; 8 | AD.50	4

THE ABOVE DRAWINGS AND SPECIFICATIONS AND IDEAS, DESIGNS AND ARRANGEMENTS REPRESENTED THEREBY ARE AND SHALL REMAIN THE PROPERTY OF THE ARCHITECT AND NO PART THEREOF SHAL BE COPIED DISCLOSED TO OTHERS OR USED IN CONNECTION WITH ANY OTHER WORK OR PROJECT OTHER THAN THE SPECIFIC PROJECT FOR WHICH THEY HAVE BEEN PREPARED AND DEVELOPED, WITHOUT THE WRITTEN CONSENT OF THE ARCHITECT. VISUAL CONTACT WITH THESE DRAWINGS OR SPECIFICATIONS SHALL CONSTITUTE CONCLUSIVE EVIDENCE OF ACCEPTANCE OF THESE RESTRICTIONS.

NO.	REVISIONS	DATE
01	PLAN CHECK REVISIONS	06/06/2016

LICENSED ARCHITECT — STEPHEN M. ALBERT — NO. C 9412 — REN. 5-31-13 — STATE OF CALIFORNIA

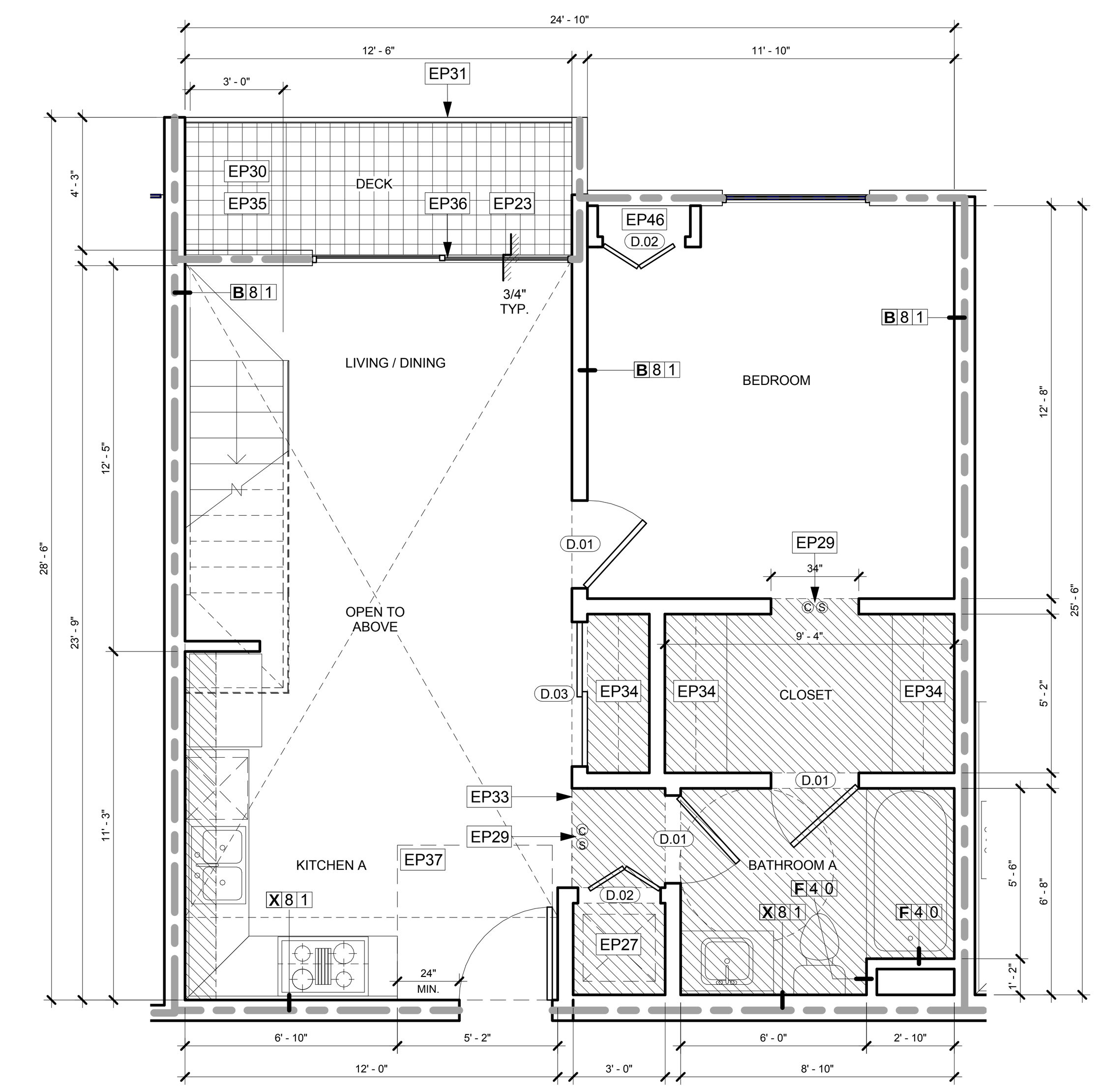

LOFT 1A.01 (UNIT 305) | SCALE: 1/4" = 1'-0" | 1

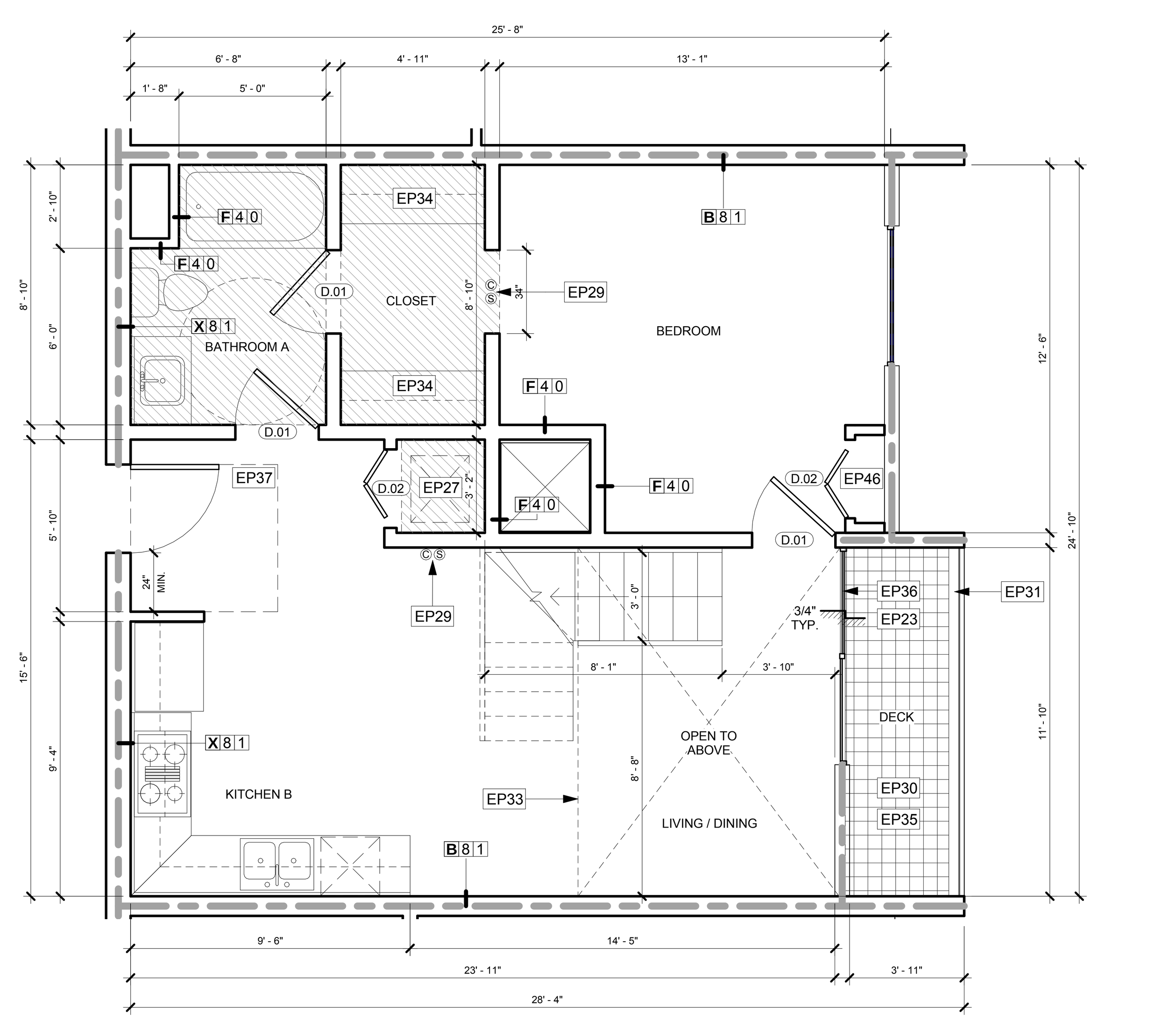

LOFT 1B.01 (UNIT 312) | SCALE: 1/4" = 1'-0" | 3

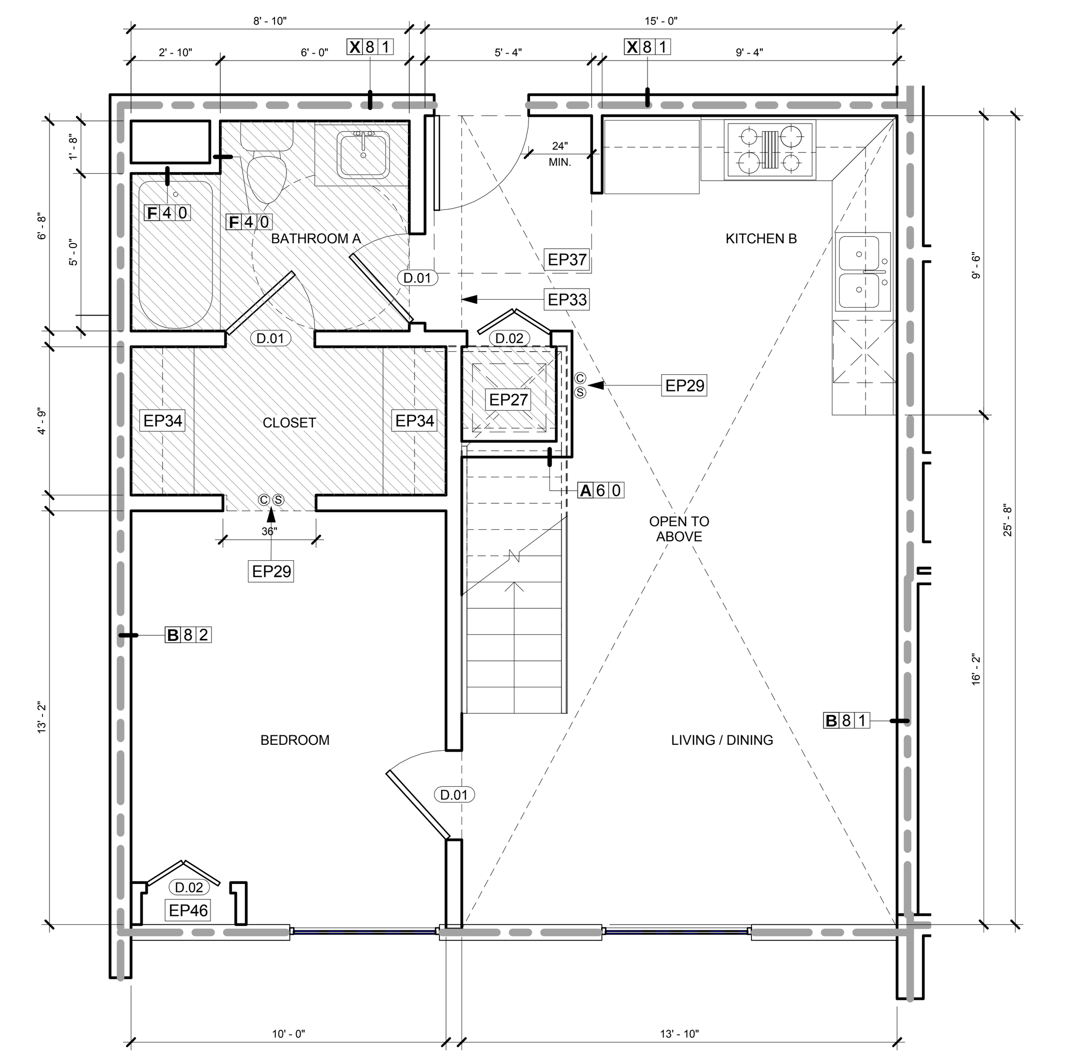

LOFT 1C.01 (UNIT 314) | SCALE: 1/4" = 1'-0" | 5

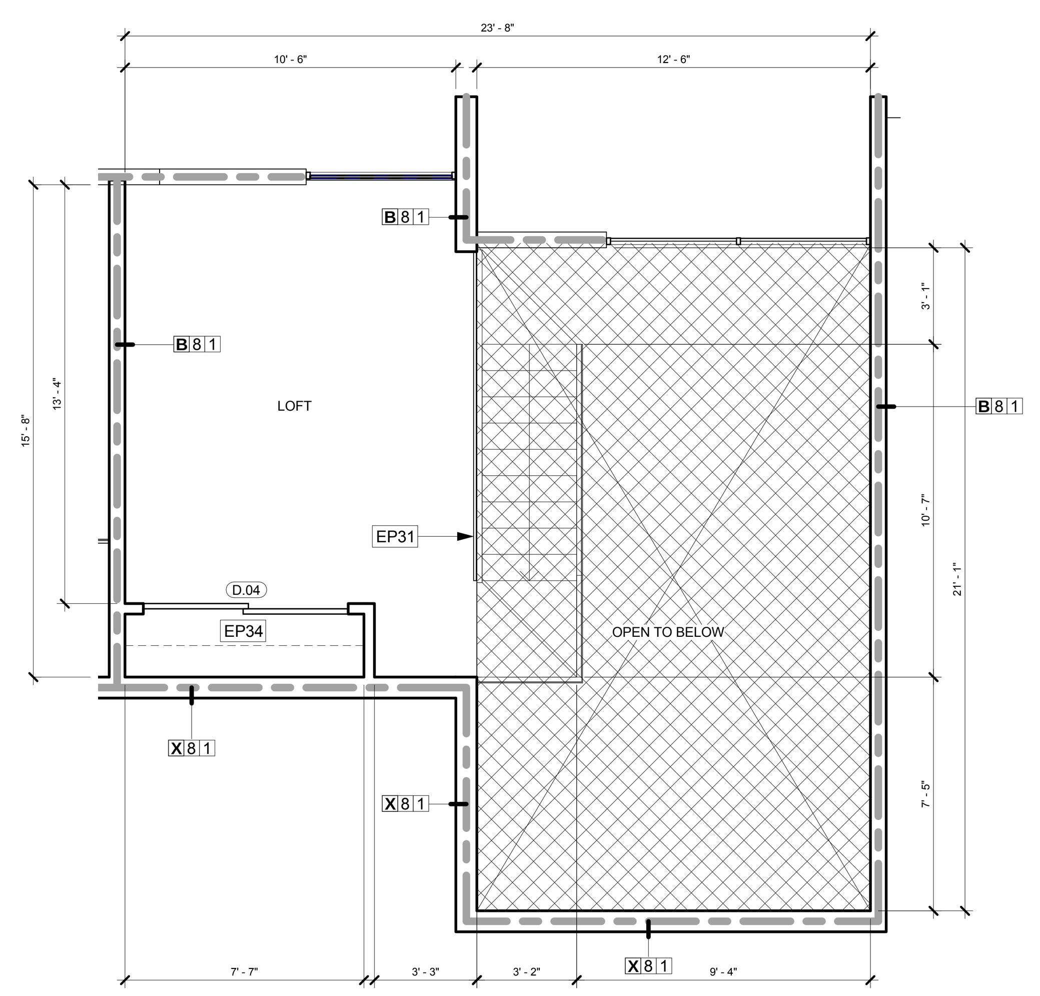

LOFT 1A.02 (UNIT 305) | SCALE: 1/4" = 1'-0" | 2

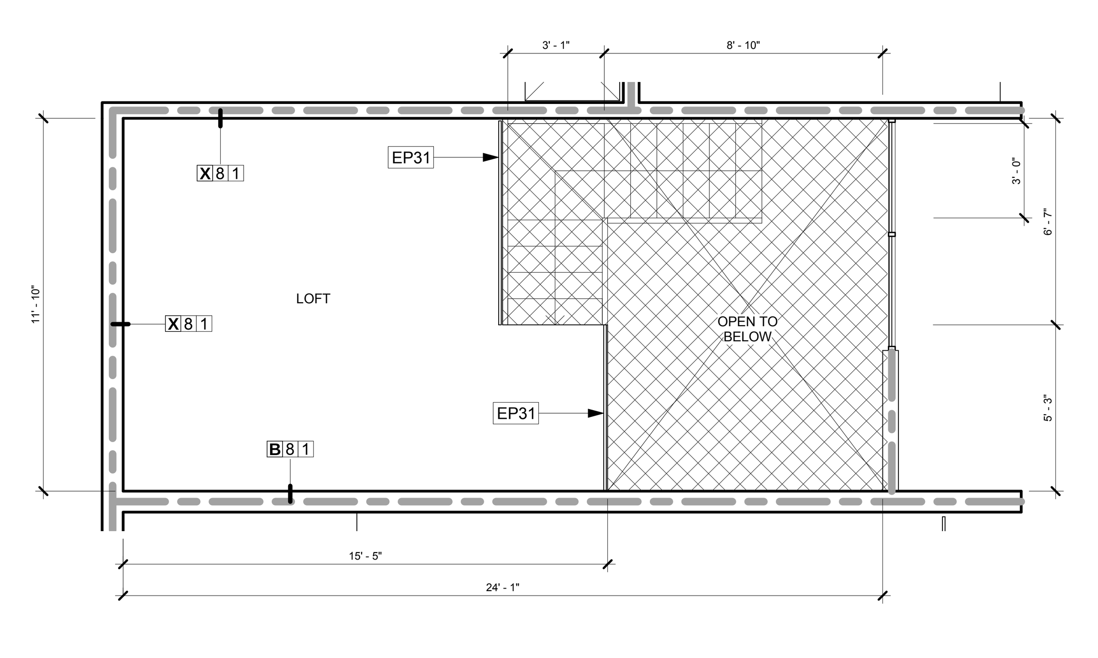

LOFT 1B.02 (UNIT 312) | SCALE: 1/4" = 1'-0" | 4

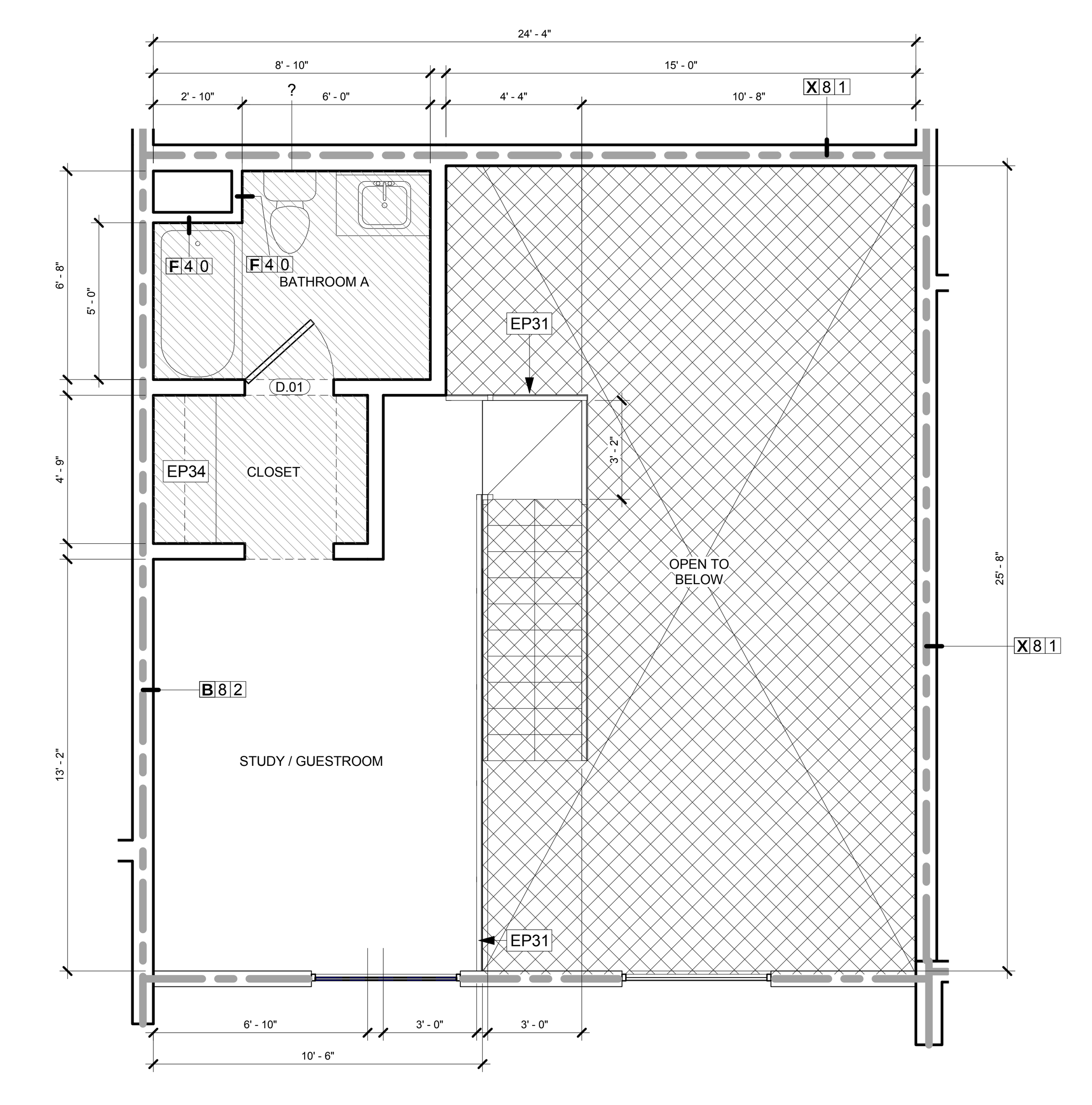

LOFT 1C.02 (UNIT 314) | SCALE: 1/4" = 1'-0" | 6

1833 N. GAREY AVE.

1833 NORTH GAREY AVENUE
PAMONA, CALIFORNIA 91767

ENLARGED 1 BEDROOM LOFTS

the albert group architects
2032 Stoner Ave | Los Angeles, CA 90025 310.820.8863

C.U.P NUMBER:

PROJECT NUMBER: 14130

PROJECT STATUS: PLAN CHECK RESUBMITTAL

ISSUE DATE: 07/18/2016

SHEET NUMBER: A2.12

ENLARGED PLAN KEY NOTES

EP1 REFRIGERATOR. VERIFY W/OWNER SPACE NEEDED PENDING SPECIFICATION.
EP2 SLIDE-IN, COUNTER DEPTH, GAS RANGE.
EP3 RECIRCULATING HOOD.
EP4 CABINET ABOVE, SEE 2|AD.80 FOR TYPICAL SECTION
EP5 30" WIDE SINK.
EP6 DISHWASHER
EP7 36" HIGH, STONE TOP COUNTER, TYPICAL @ KITCHENS, SEE 1-5|AD.80 FOR TYPICAL CASEWORK SECTIONS
EP8 GARBAGE DISPOSAL
EP9 PROVIDE MINIMUM TWO 15" WIDE BREADBOARDS OR 30" WIDE WORK SPACE IN EACH KITCHEN.
EP10 30" x 48" APPROACH TO APPLIANCES, TYPICAL.
EP11 RUN FLOORING UNDER CABINET AS REQUIRED FOR A.D.A. ACCESSIBILITY TO REAR WALL. CABINET UNDER SINK TO BE TO BE REMOVABLE PER DISABLED ACCESS, SEE ACCESSIBILITY AND 1|AD.80 FOR TYPICAL SECTION. HOT WATER AND DRAIN PIPES EXPOSED UNDER SINKS SHALL BE INSULATED OR OTHERWISE CONFIGURED SO AS TO PRTECT AGAINST CONTACT. THERE SHALL BE NO SHARP OR ABRASIVE SURFACES UNDER SINKS.
EP12 UNDERMOUNT LAVATORY BASIN.
EP14 WATER CLOSET SHALL BE "ULTRA LOW FLUSH" TYPE TOILET: MAX. 1.28 GAL/FLUSH (4.8 LITERS)
EP15 LIGHT/EXHAUST FAN COMBINATION TO PROVIDE A MIN. 5 AIR CHANGES PER HOUR. BATHROOM EXHAUST FANS TO BE ENERGY STAR COMPLIANT AND CONTROLLED BY A HUMIDISTAT WHICH SHALL BE READILY ACCESSIBLE.
EP16 34" HIGH MAX STONE COUNTER TOP AT BATHROOMS.
EP18 LOCATION OF POSSIBLE FUTURE SWING AWAY GRAB BAR, TYPICAL
EP19 HANDICAP GRAB BAR BACKING, TYPICAL, SEE DETAILS 8|HC.7
EP20 66"x30" TUB / SHOWER COMBINATION, CERAMIC TILE SURROUND W/SLIDING SHOWER ENCLOSURE. VERIFY TILE LAYOUT WITH ARCHITECT.
EP22 SHATTERPROOF SHOWER ENCLOSURE, VERIFY HEIGHT AND FRAME DESIGN. SHOWER THRESHOLD @ 2" MAXIMUM HEIGHT @ 1:2

ENLARGED PLAN KEY NOTES

EP23 THRESHOLD AT 3/4" MAXIMUM HEIGHT AT 1:2 HORIZONTAL BEVELED PER SECTION 1132A.4.1.
EP24 30" x 48" APPROACH SPACES AT SINK, SHOWER AND TUB
EP25 36" x 48" APPROACH SPACE AT WATER CLOSET, UNLESS WHERE 36" x 36" IS PERMITTED PER 1134A.7.1. EXCEPTION
EP26 FRONT LOAD ADA COMPLIANT WASHER, VENTED TO EXTERIOR AS REQUIRED BY MECHANICAL CODE.
EP27 FRONT LOAD STACK WASHER AND DRYER, VENTED TO EXTERIOR AS REQUIRED BY MECHANICAL CODE.
EP28 FRONT LOAD ADA COMPLIANT DRYER, VENTED TO EXTERIOR AS REQUIRED BY MECHANICAL CODE.
EP29 HARDWIRED SMOKE DETECTOR, TYPICAL THROUGHOUT. PROVIDE APPROVED, INTERCONNECTED HARDWIRED CARBON MONOXIDE ALARM/DETECTORS WITH BATTERY BACK-UP IN HALLWAYS AND BEDROOMS.
EP30 MINIMUM CLASS "B" RATED ELASTOMERIC DECK COATING SLOPED FOR PROPER DRAINAGE, ICC# ER-5019.
EP31 42" HIGH GUARDRAIL OR GUARDRAIL WALL.
EP33 LINE OF FLOOR ABOVE.
EP34 SHELF AND POLE.
EP35 AREA OF BALCONY / PATIO, 2% MAX SLOPE, TYPICAL. VERIFY LAYOUT WITH OVERALL PLANS.
EP36 DOOR / WINDOW SHALL PROVIDE AN OPENABLE MEANS OF EGRESS WITH A MAXIMUM SILL HEIGHT NOT MORE THAN 44" ABOVE FINISHED FLOOR. SEE GN-3 / V-1.
EP37 48"x60" MINIMUM CLEAR FOR SIDE APPROACH, 60"x60" MINIMUM CLEAR FOR FRONT APPROACH, AT ENTRY TO UNITS, TYP.
EP39 ROUND EXHAUST TERMINAL, SEE ELVATION.
EP42 34" x 84" ACCESS PANEL, FOR ACCESSING AND SERVICING FCU AND DUCTWORK FOR MEZZANINE UNITS
EP46 TANKLESS WATER HEATER WITH LOUVER AND ACCESS PANEL

ENLARGED PLAN GENERAL NOTES

A. ALL EXTERIOR WALLS TO BE X 61 U.O.N. (EXCEPT WHEN NOTED)
B. ALL INTERIOR WALLS TO BE A 40 U.O.N. (EXCEPT WHEN NOTED)
C. CEILING HEIGHTS ARE MEASURED FROM TOP OF SUB FLOOR, TYP.
D. GUARDRAIL CONSTRUCTION SHALL BE CAPABLE OF RESISTING A 20 PLF HORIZONTAL LOAD PERPENDICULAR TO THE TOP RAIL PER 2010 C.B.C., SECTION 1607.7
E. PROVIDE WINDOWS SIZED FOR EMERGENCY ESCAPE AND RESUCUE COMPLIANCE AT ALL SLEEPING ROOMS, WITH MIN NET CLEAR OPENING OF 5.7 SF AND SILL HEIGHT NOT MORE THAN 44" ABOVE THE FLOOR AND OPEN DIRECTLY TO STREETS, PUBLIC ALLEYS, YARDS OR EXIT COURTS.
F. DRAFTSTOPS SHALL BE INSTALLED IN CONCEALED FLOOR AND ATTIC SPACES. DRAFTSTOPS SHALL BE INSTALLED IN LINE WITH DWELLING UNIT AND SLEEPING AREA SEPERATIONS, AND CONSTRUCTED PER 2010 C.B.C.
G. FIRE BLOCKING SHALL BE PROVIDED IN THE FOLLOWING:
1. IN CONCEALED PLACES OF STUD WALLS AND PARTITIONS, INCLUDING FURRED SPACES, AT CEILINGS AND FLOOR LEVEL AND AT 10' INTERVALS, BOTH VERTICAL AND HORIZONTAL, PER CBC SECTION 803.
2. AT ALL INTER-CONNECTIONS BETEEN CONCEALED VERTICAL AND HORIZONTAL SPACES SUCH AS SOFFITS, DROP AND COVED CEILINGS.
3. IN CONCEALED SPACES BETWEEN STAIR STRINGERS AT THE TOP AND BOTTOM OF THE RUN AND BETWEEN STUDS ALONG AND IN LINE WITH THE RUN OF THE STAIRS IF THE WALLS UNDER THE STAIRS ARE UNFINISHED.
I. ALL GLAZING TO BE TEMPERED INCLUDING SHOWER/BATHTUB DOORS AND SHALL BE AFFIXED WITH A PERMANENT LABEL.
K. ALL DOORS TO HAVE A MIN 32" CLEAR DIMENSION.
L. MAXIMUM 1/2" ELEVATION DIFFERENCE AT DOOR THRESHOLDS
M. PROVIDE 24" CLEAR FROM STRIKE SIDE OF SWINGING DOOR AT PULL SIDE AND 12" AT PUSH SIDE OF ALL EXTERIOR UNIT DOORS.PROVIDE 18" CLEAR FROM STRIKE SIDE OF SWINGING DOOR AT PULL SIDE AND 12" AT PUSH SIDE OF ALL INTERIOR UNIT DOORS.
N. INTERIOR DOOR FINISHES SHALL COMPLY WITH SECTION 10.2.7 OF NFPA 101 AND SECTION 804 OF C.B.C.
O. NON-ABSORBENT INTERIOR FLOOR AND WALL FINISHES WITHIN 2' AROUND AND PERPINDICULAR TO EXTERIOR ENTRIES AND/OR OPENINGS SUBJECT TO FOOT TRAFFIC (5.407.2.2)
P. OCCUPIABLE SPACES, HABITABLE SPACES, AND CORRIDORS SHALL HAVE A CEILING HEIGH OF NOT LESS THAN 7' - 6". BATHROOMS, TOILET ROOMS, KITCHENS, STORAGE ROOMS AND LAUNDRY ROOMS SHALL BE PERMITTED TO HAVE A CEILING HEIGHT OF NOT LESS THAN 7' (1208.2). ANY ROOM WITH A FURRED CEILING SHALL BE REQUIRED TO HAVE THE MINIMUM CEILING HEIGHT IN TWO-THIRDS OF THE AREA THEREOF, BUT IN NO CASE SHALL THE HEIGHT OF THE FURRED CEILING BE LESS THAN 7'.
Q. THE FLOW RATES FOR ALL PLUMBING FIXTURES SHALL COMPLY WITH THE MAXIMUM FLOW RATES IN TABLE 4.303.1.
R. ACOUSTICAL SOUND PADS ARE REQUIRED ON ALL ELECTRICAL & LV BOXES MOUNTED IN THE CEILINGS.
S. WHEN A SHOWER IS SERVED BY MORE THAN ONE SHOWERHEAD, THE COMINED FLOW RATE OF ALL THE SHOWERHEADS AND/OR OTHER OUTLETS CONTROLLED BY A SINGLE VALVE SHALL NOT EXCEED 2.0 GALLONS PER MINUTE AT 80 PSI, OR THE SHOWER SHALL BE DESIGNED TO ONLY ALLOW ONE SHOWERHEAD TO BE IN OPERATION AT A TIME.

LEGEND

A 6 0 — WALL TYPE TAG, REFER TO AD.10
DUCT SOFFIT @ 7'-10" (7'-6" MIN.)
1-HOUR FIRE BARRIER
2-HOUR FIRE BARRIER
BATHROOM EXHAUST: ENERGY STAR COMPLIANT, DUCTED TO TERMINATE OUTSIDE THE BUILDING. FANS NOT FUNCTIONING AS A COMPONENT OF A WHOLE UNIT VENTILATION SYSTEM MUST BE HUMIDITY CONTROLLED
S — SMOKE DETECTOR
C — CARBON MONOXIDE DETECTOR

RESIDENTIAL DOOR SCHEDULE

ABBREVIATIONS

*	DENOTES EGRESS	EXT	EXTERIOR	SF	STORE FRONT
ALUM	ALUMINUM	FX	FIXED	SG	SINGLE GLAZED
BF	BI-FOLDING	HC	HOLLOW CORE	SGD	SLIDING GLASS DR
CA	CASEMENT	HM	HOLLOW METAL	SI	SINGLE
CLR	CLEAR ANODIZED	INT	INTERIOR	SL	SLIDER
DB	DOUBLE	PF	PAINTED FINISH	SWG	SWING
DG	DUAL GLAZED	RG	REEDED GLASS	TG	TEMPERED GLASS
ENT	ENTRY	SC	SOLID CORE	WD	WOOD

HARDWARE GROUPS

1. MORTISE ENTRY W/ DEADBOLT
2. CYLINDER W/ PRIVACY THUMB TURN
3. CYLINDER PASSAGE
4. FINGER PULL

NO.	OPERATION	TYPE	SIZE	DETAIL REF	HDWRE
D.01	SI	WD SC	2' 10" x 7' 0"	3 | AD.50; 4 | AD50	2
D.02	BF	WD HC	2' 8" x 7' 0"	3 | AD.50; 5 | AD.50; 6 | AD.50	4
D.03	SL	WD HC	4' 8" x 7' 0"	3 | AD.50; 7 | AD.50; 8 | AD.50	4
D.04	SL	WD HC	6' 6" x 7' 0"	3 | AD.50; 7 | AD.50; 8 | AD.50	4
D.05	SL	WD HC	9' 0" x 7' 0"	3 | AD.50; 7 | AD.50; 8 | AD.50	4

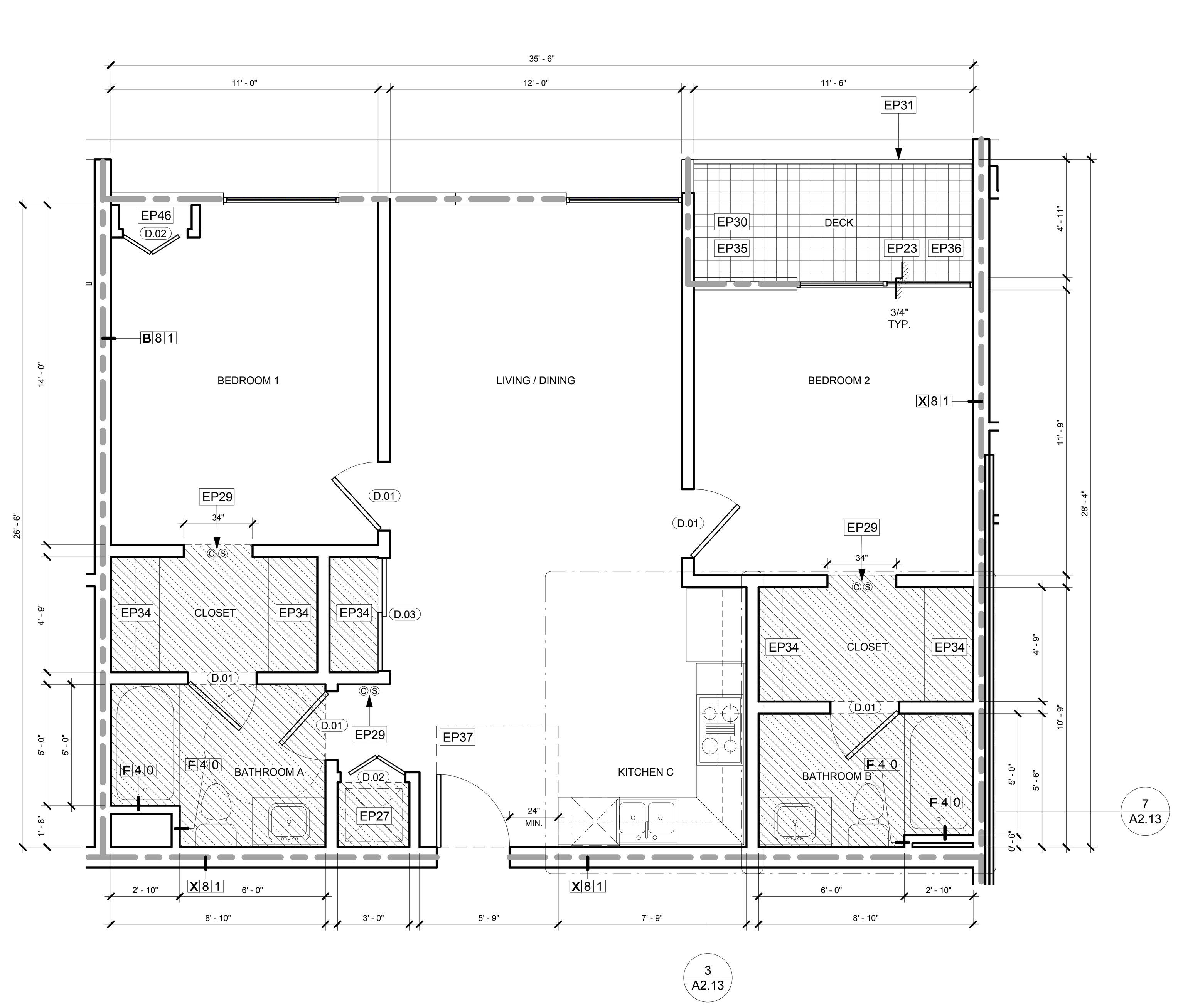

UNIT TYPE 2A (UNIT 201-204-208-209-309) — SCALE: 1/4" = 1'-0" — 1

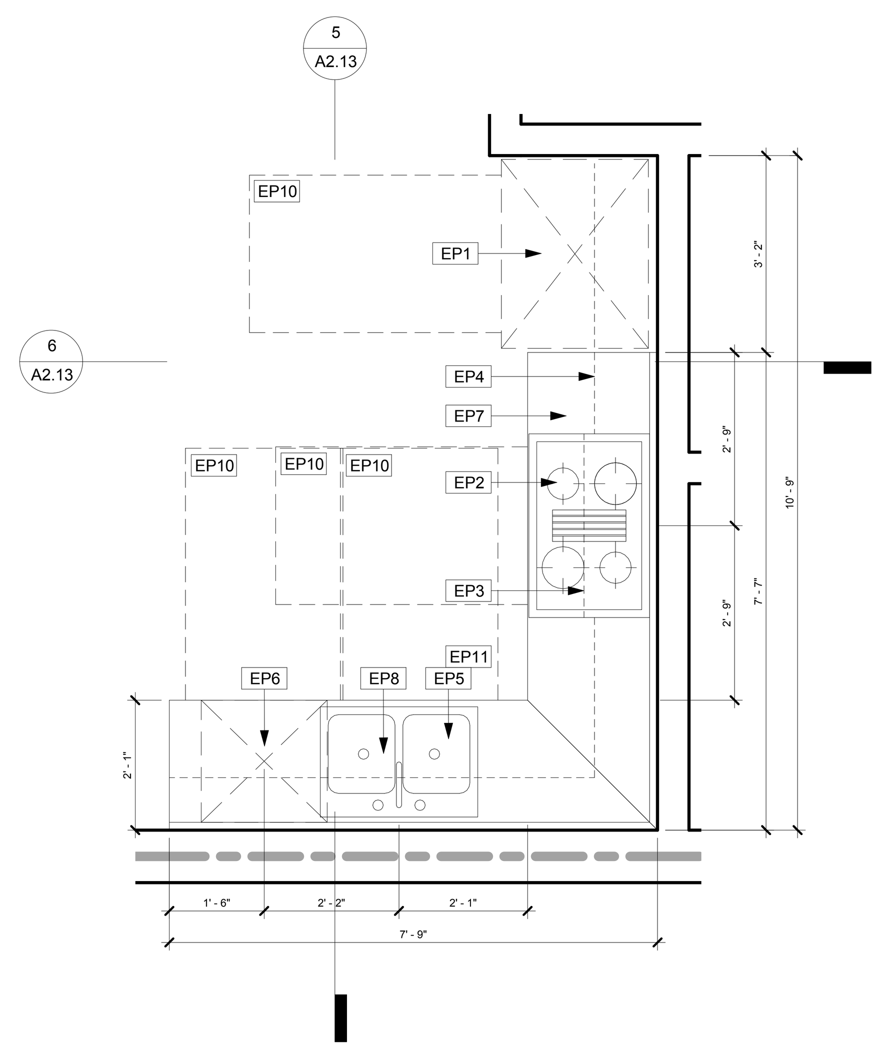

KITCHEN C - 2A / 2A SIM / LOFTS — SCALE: 1/2" = 1'-0" — 3

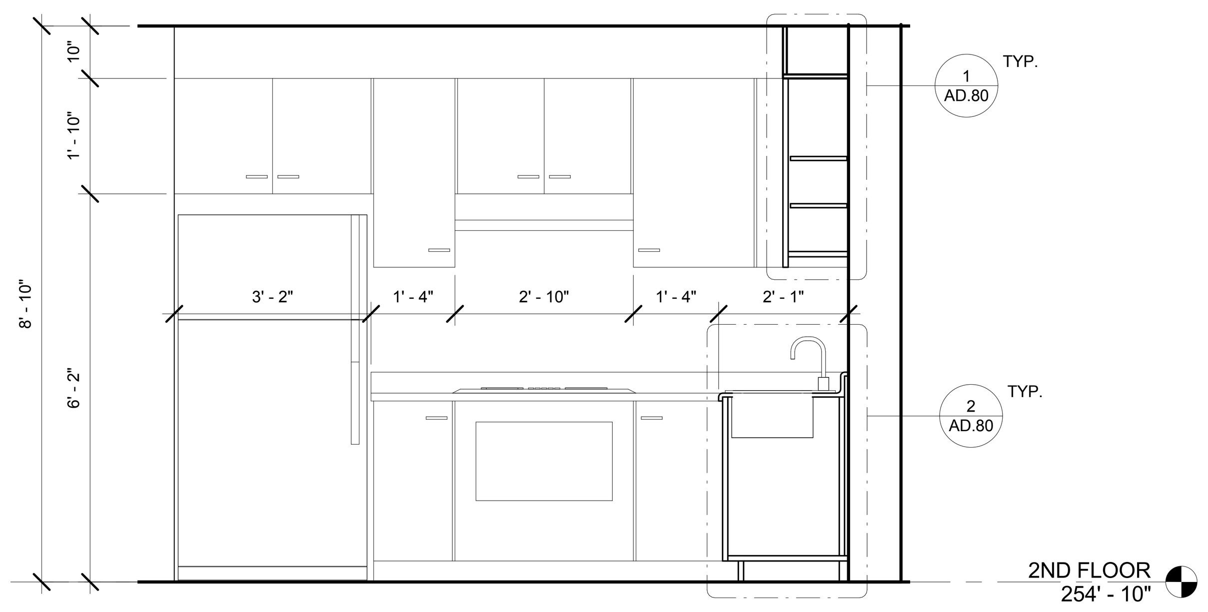

TYPICAL KITCHEN ELEVATION I — SCALE: 1/2" = 1'-0" — 5

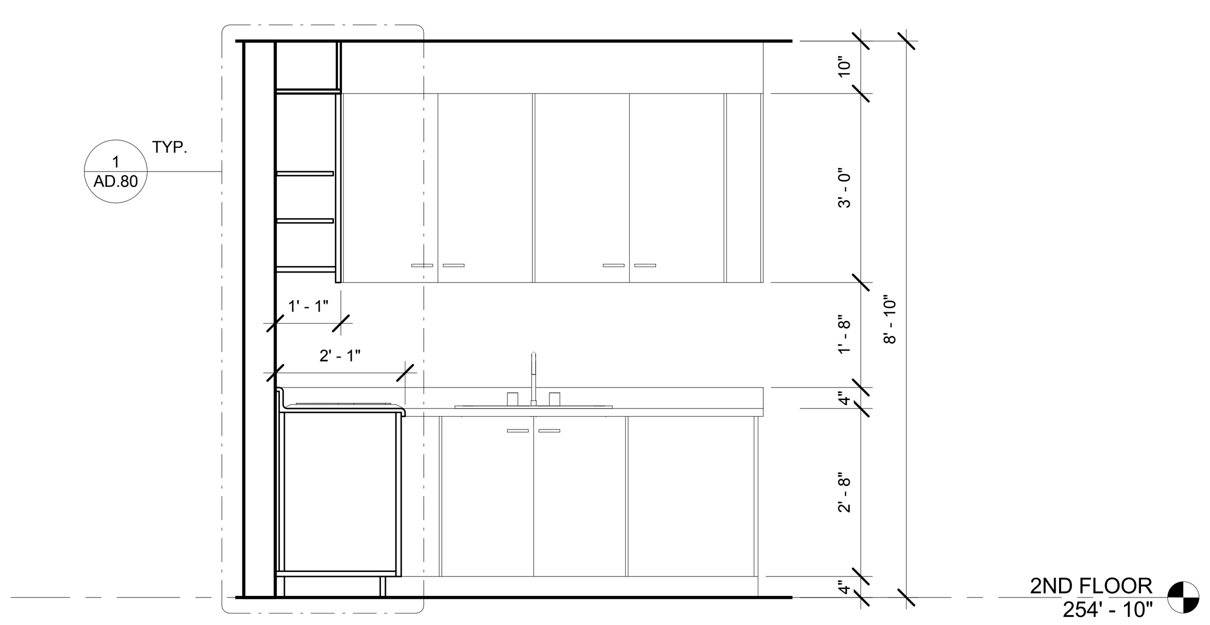

TYPICAL KITCHEN ELEVATION II — SCALE: 1/2" = 1'-0" — 6

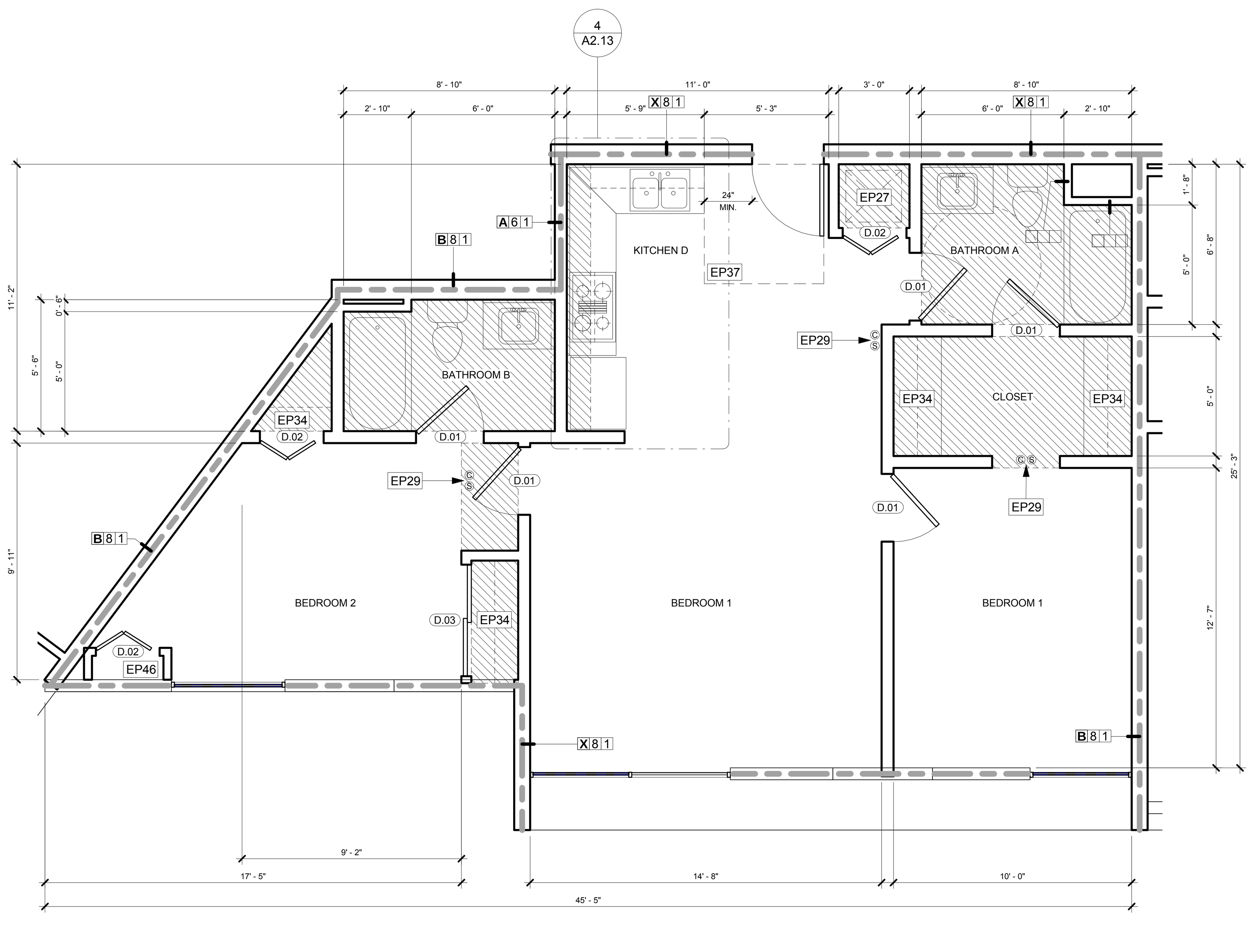

UNIT TYPE 2A SIM (UNIT 202-207) — SCALE: 1/4" = 1'-0" — 2

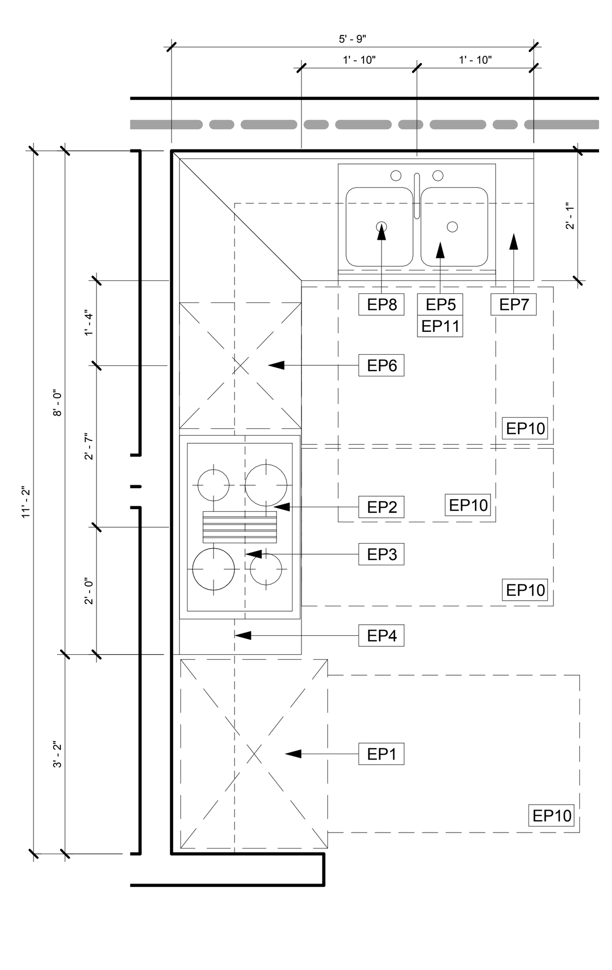

KITCHEN D - 2A SIM — SCALE: 1/2" = 1'-0" — 4

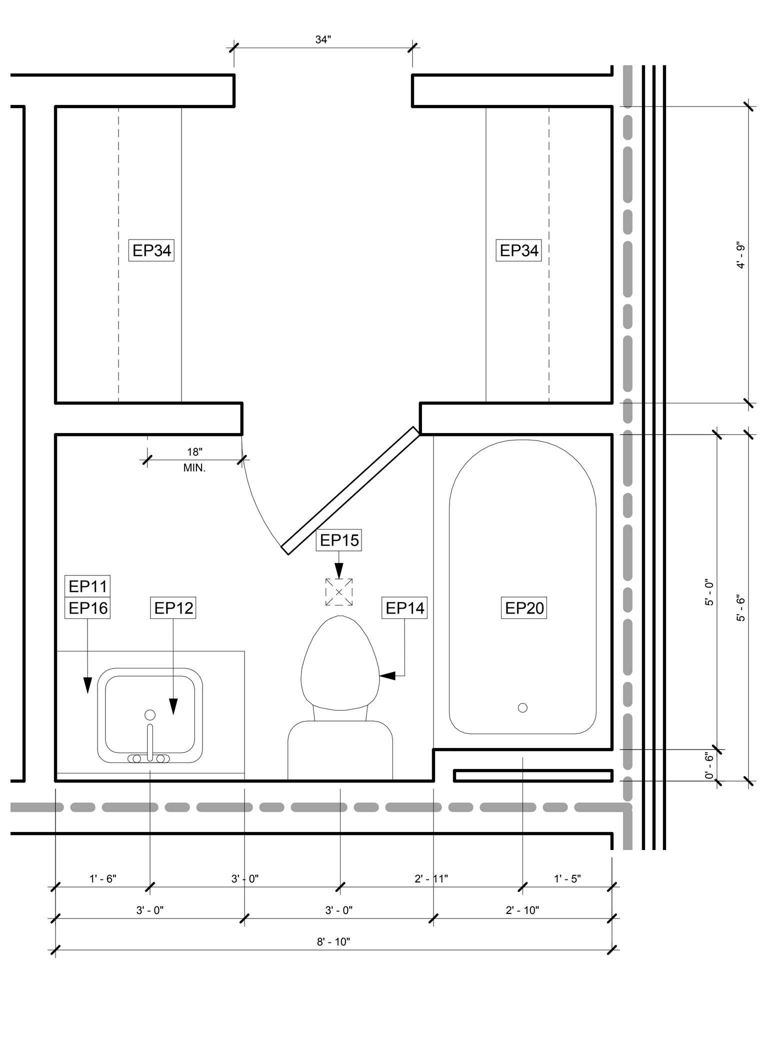

BATHROOM B - ALL 2 BEDROOM UNITS & LOFTS — SCALE: 1/2" = 1'-0" — 7

THE ABOVE DRAWINGS AND SPECIFICATIONS AND IDEAS, DESIGNS AND ARRANGEMENTS REPRESENTED THEREBY ARE AND SHALL REMAIN THE PROPERTY OF THE ARCHITECT AND NO PART THEREOF SHAL BE COPIED DISCLOSED TO OTHERS OR USED IN CONNECTION WITH ANY OTHER WORK OR PROJECT OTHER THAN THE SPECIFIC PROJECT FOR WHICH THEY HAVE BEEN PREPARED AND DEVELOPED, WITHOUT THE WRITTEN CONSENT OF THE ARCHITECT. VISUAL CONTACT WITH THESE DRAWINGS OR SPECIFICATIONS SHALL CONSTITUTE CONCLUSIVE EVIDENCE OF ACCEPTANCE OF THESE RESTRICTIONS.

NO.	REVISIONS	DATE
01	PLAN CHECK REVISIONS	06/06/2016

LICENSED ARCHITECT — STEPHEN M. ALBERT — NO. C 9412 — REN. 5-31-13 — STATE OF CALIFORNIA

1833 N. GAREY AVE.

1833 NORTH GAREY AVENUE
PAMONA, CALIFORNIA 91767

ENLARGED 2 BEDROOM UNITS

the albert group architects
2032 Stoner Ave | Los Angeles, CA 90025 310.820.8863

C.U.P NUMBER:

PROJECT NUMBER: 14130

PROJECT STATUS: PLAN CHECK RESUBMITTAL

ISSUE DATE: 07/18/2016

SHEET NUMBER: A2.13

ENLARGED PLAN KEY NOTES

EP1 REFRIGERATOR. VERIFY W/OWNER SPACE NEEDED PENDING SPECIFICATION.
EP2 SLIDE-IN, COUNTER DEPTH, GAS RANGE.
EP3 RECIRCULATING HOOD.
EP4 CABINET ABOVE, SEE 2|AD.80 FOR TYPICAL SECTION
EP5 30" WIDE SINK.
EP6 DISHWASHER
EP7 36" HIGH, STONE TOP COUNTER, TYPICAL @ KITCHENS, SEE 1-5|AD.80 FOR TYPICAL CASEWORK SECTIONS
EP8 GARBAGE DISPOSAL
EP9 PROVIDE MINIMUM TWO 15" WIDE BREADBOARDS OR 30" WIDE WORK SPACE IN EACH KITCHEN.
EP10 30" x 48" APPROACH TO APPLIANCES, TYPICAL.
EP11 RUN FLOORING UNDER CABINET AS REQUIRED FOR A.D.A. ACCESSIBILITY TO REAR WALL. CABINET UNDER SINK TO BE TO BE REMOVABLE PER DISABLED ACCESS, SEE ACCESSIBILITY AND 1|AD.80 FOR TYPICAL SECTION. HOT WATER AND DRAIN PIPES EXPOSED UNDER SINKS SHALL BE INSULATED OR OTHERWISE CONFIGURED SO AS TO PRTECT AGAINST CONTACT. THERE SHALL BE NO SHARP OR ABRASIVE SURFACES UNDER SINKS.
EP12 UNDERMOUNT LAVATORY BASIN.
EP14 WATER CLOSET SHALL BE "ULTRA LOW FLUSH" TYPE TOILET: MAX. 1.28 GAL/FLUSH (4.8 LITERS)
EP15 LIGHT/EXHAUST FAN COMBINATION TO PROVIDE A MIN. 5 AIR CHANGES PER HOUR. BATHROOM EXHAUST FANS TO BE ENERGY STAR COMPLIANT AND CONTROLLED BY A HUMIDISTAT WHICH SHALL BE READILY ACCESSIBLE.
EP16 34" HIGH MAX STONE COUNTER TOP AT BATHROOMS.
EP18 LOCATION OF POSSIBLE FUTURE SWING AWAY GRAB BAR, TYPICAL
EP19 HANDICAP GRAB BAR BACKING, TYPICAL, SEE DETAILS 8|HC.7
EP20 66"x30" TUB / SHOWER COMBINATION, CERAMIC TILE SURROUND W/SLIDING SHOWER ENCLOSURE. VERIFY TILE LAYOUT WITH ARCHITECT.
EP22 SHATTERPROOF SHOWER ENCLOSURE, VERIFY HEIGHT AND FRAME DESIGN. SHOWER THRESHOLD @ 2" MAXIMUM HEIGHT @ 1:2

ENLARGED PLAN KEY NOTES

EP23 THRESHOLD AT 3/4" MAXIMUM HEIGHT AT 1:2 HORIZONTAL BEVELED PER SECTION 1132A.4.1.
EP24 30" x 48" APPROACH SPACES AT SINK, SHOWER AND TUB
EP25 36" x 48" APPROACH SPACE AT WATER CLOSET, UNLESS WHERE 36" x 36" IS PERMITTED PER 1134A.7.1. EXCEPTION
EP26 FRONT LOAD ADA COMPLIANT WASHER, VENTED TO EXTERIOR AS REQUIRED BY MECHANICAL CODE.
EP27 FRONT LOAD STACK WASHER AND DRYER, VENTED TO EXTERIOR AS REQUIRED BY MECHANICAL CODE.
EP28 FRONT LOAD ADA COMPLIANT DRYER, VENTED TO EXTERIOR AS REQUIRED BY MECHANICAL CODE.
EP29 HARDWIRED SMOKE DETECTOR, TYPICAL THROUGHOUT. PROVIDE APPROVED, INTERCONNECTED HARDWIRED CARBON MONOXIDE ALARM/DETECTORS WITH BATTERY BACK-UP IN HALLWAYS AND BEDROOMS.
EP30 MINIMUM CLASS "B" RATED ELASTOMERIC DECK COATING SLOPED FOR PROPER DRAINAGE, ICC# ER-5019.
EP31 42" HIGH GUARDRAIL OR GUARDRAIL WALL.
EP33 LINE OF FLOOR ABOVE.
EP34 SHELF AND POLE.
EP35 AREA OF BALCONY / PATIO, 2% MAX SLOPE, TYPICAL. VERIFY LAYOUT WITH OVERALL PLANS.
EP36 DOOR / WINDOW SHALL PROVIDE AN OPENABLE MEANS OF EGRESS WITH A MAXIMUM SILL HEIGHT NOT MORE THAN 44" ABOVE FINISHED FLOOR. SEE GN-3 / V-1.
EP37 48"x60" MINIMUM CLEAR FOR SIDE APPROACH, 60"x60" MINIMUM CLEAR FOR FRONT APPROACH, AT ENTRY TO UNITS, TYP.
EP39 ROUND EXHAUST TERMINAL, SEE ELVATION.
EP42 34" x 84" ACCESS PANEL, FOR ACCESSING AND SERVICING FCU AND DUCTWORK FOR MEZZANINE UNITS
EP46 TANKLESS WATER HEATER WITH LOUVER AND ACCESS PANEL

ENLARGED PLAN GENERAL NOTES

A. ALL EXTERIOR WALLS TO BE X 61 U.O.N. (EXCEPT WHEN NOTED)
B. ALL INTERIOR WALLS TO BE A 40 U.O.N. (EXCEPT WHEN NOTED)
C. CEILING HEIGHTS ARE MEASURED FROM TOP OF SUB FLOOR, TYP.
D. GUARDRAIL CONSTRUCTION SHALL BE CAPABLE OF RESISTING A 20 PLF HORIZONTAL LOAD PERPENDICULAR TO THE TOP RAIL PER 2010 C.B.C., SECTION 1607.7
E. PROVIDE WINDOWS SIZED FOR EMERGENCY ESCAPE AND RESUCUE COMPLIANCE AT ALL SLEEPING ROOMS, WITH MIN NET CLEAR OPENING OF 5.7 SF AND SILL HEIGHT NOT MORE THAN 44" ABOVE THE FLOOR AND OPEN DIRECTLY TO STREETS, PUBLIC ALLEYS, YARDS OR EXIT COURTS.
F. DRAFTSTOPS SHALL BE INSTALLED IN CONCEALED FLOOR AND ATTIC SPACES. DRAFTSTOPS SHALL BE INSTALLED IN LINE WITH DWELLING UNIT AND SLEEPING AREA SEPERATIONS, AND CONSTRUCTED PER 2010 C.B.C.
G. FIRE BLOCKING SHALL BE PROVIDED IN THE FOLLOWING:
1. IN CONCEALED PLACES OF STUD WALLS AND PARTITIONS, INCLUDING FURRED SPACES, AT CEILINGS AND FLOOR LEVEL AND AT 10' INTERVALS, BOTH VERTICAL AND HORIZONTAL, PER CBC SECTION 803.
2. AT ALL INTER-CONNECTIONS BETEEN CONCEALED VERTICAL AND HORIZONTAL SPACES SUCH AS SOFFITS, DROP AND COVED CEILINGS.
3. IN CONCEALED SPACES BETWEEN STAIR STRINGERS AT THE TOP AND BOTTOM OF THE RUN AND BETWEEN STUDS ALONG AND IN LINE WITH THE RUN OF THE STAIRS IF THE WALLS UNDER THE STAIRS ARE UNFINISHED.
I. ALL GLAZING TO BE TEMPERED INCLUDING SHOWER/BATHTUB DOORS AND SHALL BE AFFIXED WITH A PERMANENT LABEL.
K. ALL DOORS TO HAVE A MIN 32" CLEAR DIMENSION.
L. MAXIMUM 1/2" ELEVATION DIFFERENCE AT DOOR THRESHOLDS
M. PROVIDE 24" CLEAR FROM STRIKE SIDE OF SWINGING DOOR AT PULL SIDE AND 12" AT PUSH SIDE OF ALL EXTERIOR UNIT DOORS.PROVIDE 18" CLEAR FROM STRIKE SIDE OF SWINGING DOOR AT PULL SIDE AND 12" AT PUSH SIDE OF ALL INTERIOR UNIT DOORS.
N. INTERIOR DOOR FINISHES SHALL COMPLY WITH SECTION 10.2.7 OF NFPA 101 AND SECTION 804 OF C.B.C.
O. NON-ABSORBENT INTERIOR FLOOR AND WALL FINISHES WITHIN 2' AROUND AND PERPINDICULAR TO EXTERIOR ENTRIES AND/OR OPENINGS SUBJECT TO FOOT TRAFFIC (5.407.2.2)
P. OCCUPIABLE SPACES, HABITABLE SPACES, AND CORRIDORS SHALL HAVE A CEILING HEIGH OF NOT LESS THAN 7' - 6". BATHROOMS, TOILET ROOMS, KITCHENS, STORAGE ROOMS AND LAUNDRY ROOMS SHALL BE PERMITTED TO HAVE A CEILING HEIGHT OF NOT LESS THAN 7' (1208.2). ANY ROOM WITH A FURRED CEILING SHALL BE REQUIRED TO HAVE THE MINIMUM CEILING HEIGHT IN TWO-THIRDS OF THE AREA THEREOF, BUT IN NO CASE SHALL THE HEIGHT OF THE FURRED CEILING BE LESS THAN 7'.
Q. THE FLOW RATES FOR ALL PLUMBING FIXTURES SHALL COMPLY WITH THE MAXIMUM FLOW RATES IN TABLE 4.303.1.
R. ACOUSTICAL SOUND PADS ARE REQUIRED ON ALL ELECTRICAL & LV BOXES MOUNTED IN THE CEILINGS.
S. WHEN A SHOWER IS SERVED BY MORE THAN ONE SHOWERHEAD, THE COMINED FLOW RATE OF ALL THE SHOWERHEADS AND/OR OTHER OUTLETS CONTROLLED BY A SINGLE VALVE SHALL NOT EXCEED 2.0 GALLONS PER MINUTE AT 80 PSI, OR THE SHOWER SHALL BE DESIGNED TO ONLY ALLOW ONE SHOWERHEAD TO BE IN OPERATION AT A TIME.

LEGEND

A 6 0	WALL TYPE TAG, REFER TO AD.10
	DUCT SOFFIT @ 7'-10" (7'-6" MIN.)
	1-HOUR FIRE BARRIER
	2-HOUR FIRE BARRIER
	BATHROOM EXHAUST: ENERGY STAR COMPLIANT, DUCTED TO TERMINATE OUTSIDE THE BUILDING. FANS NOT FUNCTIONING AS A COMPONENT OF A WHOLE UNIT VENTILATION SYSTEM MUST BE HUMIDITY CONTROLLED
S	SMOKE DETECTOR
C	CARBON MONOXIDE DETECTOR

RESIDENTIAL DOOR SCHEDULE

ABBREVIATIONS

*	DENOTES EGRESS	EXT	EXTERIOR	SF	STORE FRONT
ALUM	ALUMINUM	FX	FIXED	SG	SINGLE GLAZED
BF	BI-FOLDING	HC	HOLLOW CORE	SGD	SLIDING GLASS DR
CA	CASEMENT	HM	HOLLOW METAL	SI	SINGLE
CLR	CLEAR ANODIZED	INT	INTERIOR	SL	SLIDER
DB	DOUBLE	PF	PAINTED FINISH	SWG	SWING
DG	DUAL GLAZED	RG	REEDED GLASS	TG	TEMPERED GLASS
ENT	ENTRY	SC	SOLID CORE	WD	WOOD

HARDWARE GROUPS

1. MORTISE ENTRY W/ DEADBOLT
2. CYLINDER W/ PRIVACY THUMB TURN
3. CYLINDER PASSAGE
4. FINGER PULL

NO.	OPERATION	TYPE	SIZE	DETAIL REF	HDWRE
D.01	SI	WD SC	2' 10" x 7' 0"	3 | AD.50; 4 | AD50	2
D.02	BF	WD HC	2' 8" x 7' 0"	3 | AD.50; 5 | AD.50; 6 | AD.50	4
D.03	SL	WD HC	4' 8" x 7' 0"	3 | AD.50; 7 | AD.50; 8 | AD.50	4
D.04	SL	WD HC	6' 6" x 7' 0"	3 | AD.50; 7 | AD.50; 8 | AD.50	4
D.05	SL	WD HC	9' 0" x 7' 0"	3 | AD.50; 7 | AD.50; 8 | AD.50	4

THE ABOVE DRAWINGS AND SPECIFICATIONS AND IDEAS, DESIGNS AND ARRANGEMENTS REPRESENTED THEREBY ARE AND SHALL REMAIN THE PROPERTY OF THE ARCHITECT AND NO PART THEREOF SHAL BE COPIED DISCLOSED TO OTHERS OR USED IN CONNECTION WITH ANY OTHER WORK OR PROJECT OTHER THAN THE SPECIFIC PROJECT FOR WHICH THEY HAVE BEEN PREPARED AND DEVELOPED, WITHOUT THE WRITTEN CONSENT OF THE ARCHITECT. VISUAL CONTACT WITH THESE DRAWINGS OR SPECIFICATIONS SHALL CONSTITUTE CONCLUSIVE EVIDENCE OF ACCEPTANCE OF THESE RESTRICTIONS.

NO.	REVISIONS	DATE
01	PLAN CHECK REVISIONS	06/06/2016

LICENSED ARCHITECT
STEPHEN M. ALBERT
NO. C 9412
REN. 5-31-13
STATE OF CALIFORNIA

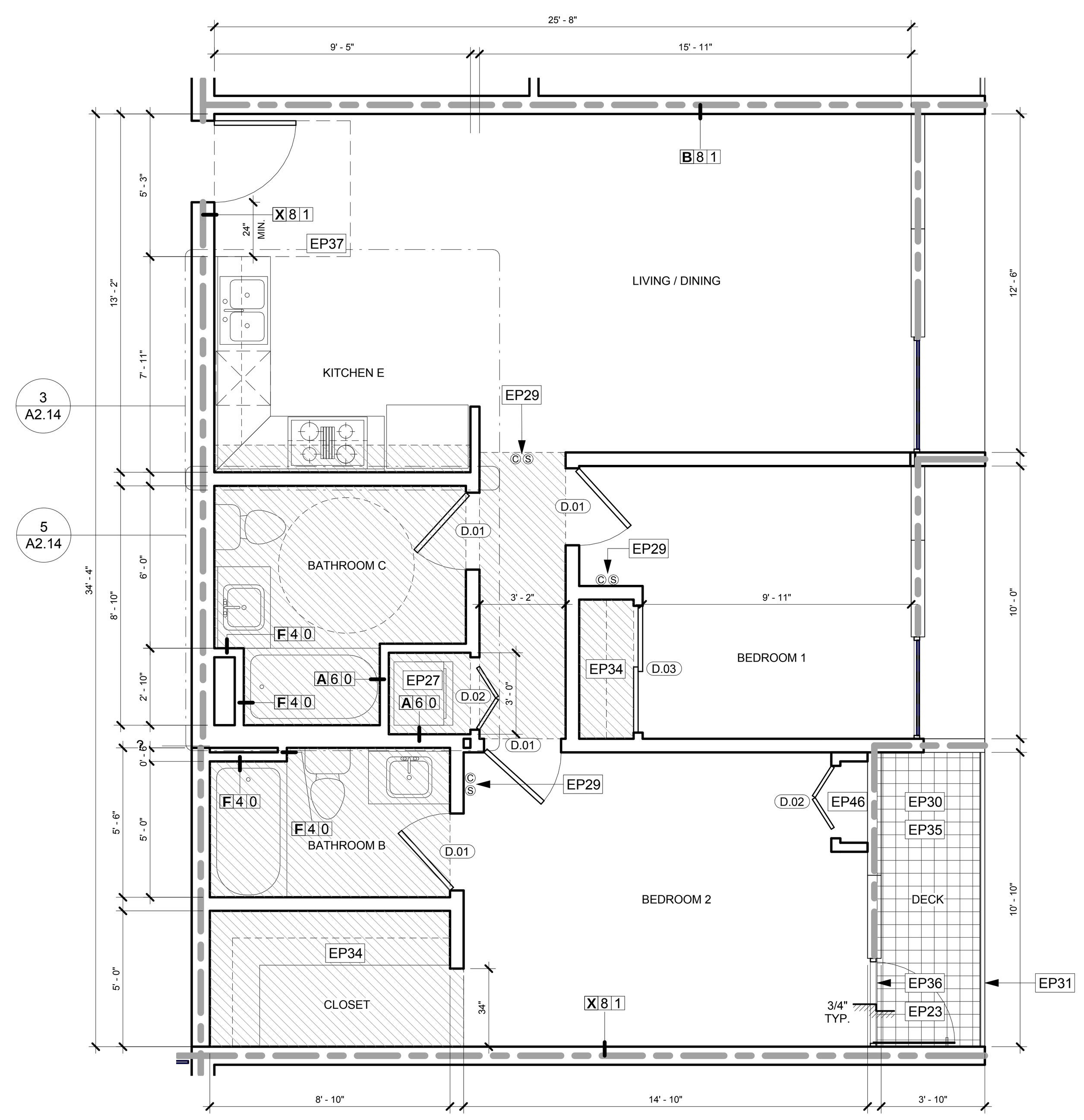

UNIT TYPE 2B (UNIT 210-213) — SCALE: 1/4" = 1'-0" — 1

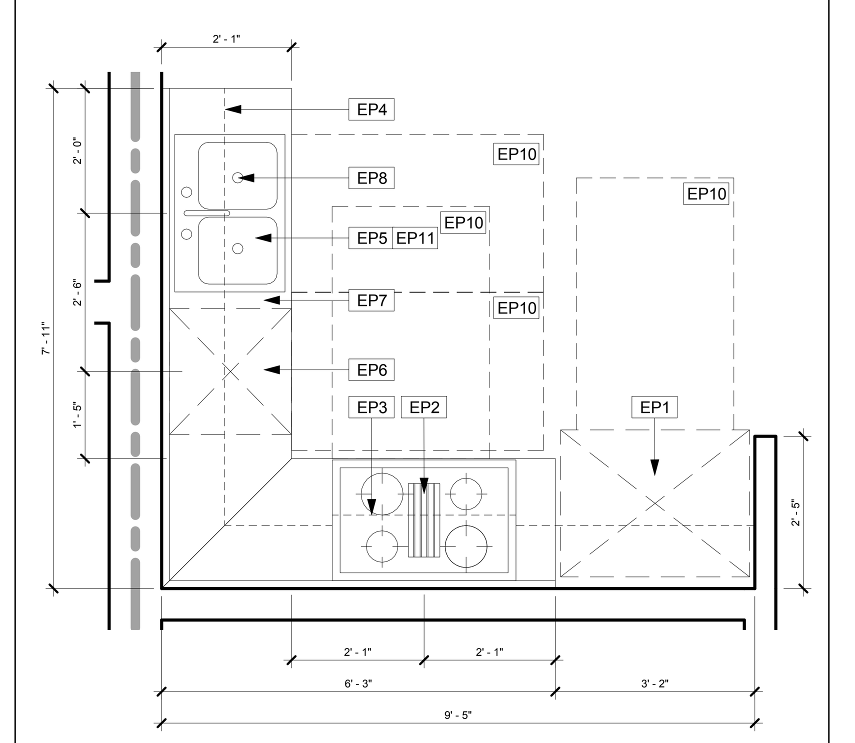

KITCHEN E - 2B / 2B SIM / LOFT 2G — SCALE: 1/2" = 1'-0" — 3

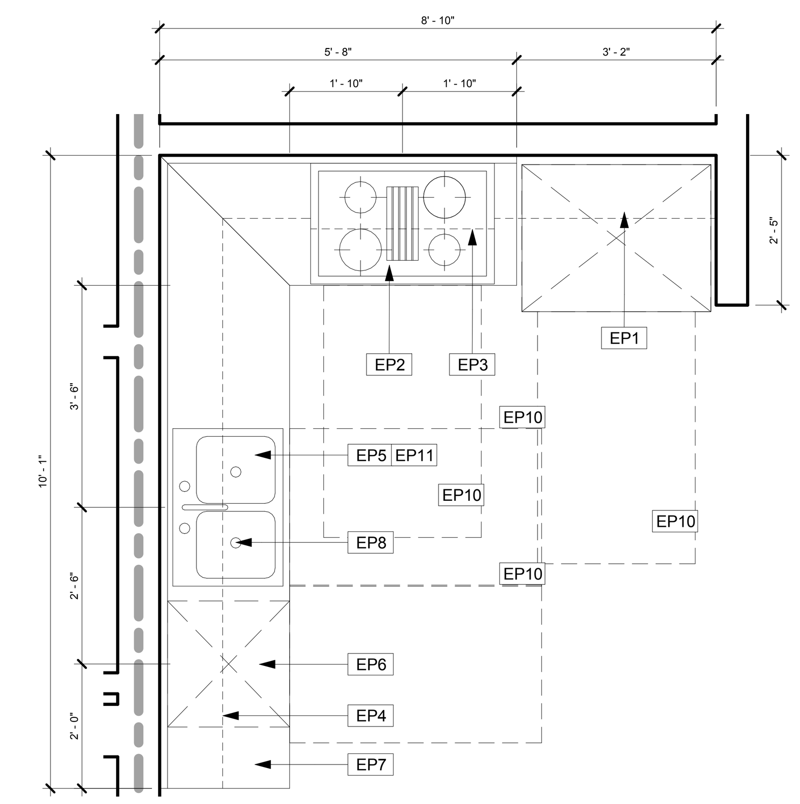

KITCHEN F - 2B SIM / LOFT 2F — SCALE: 1/2" = 1'-0" — 4

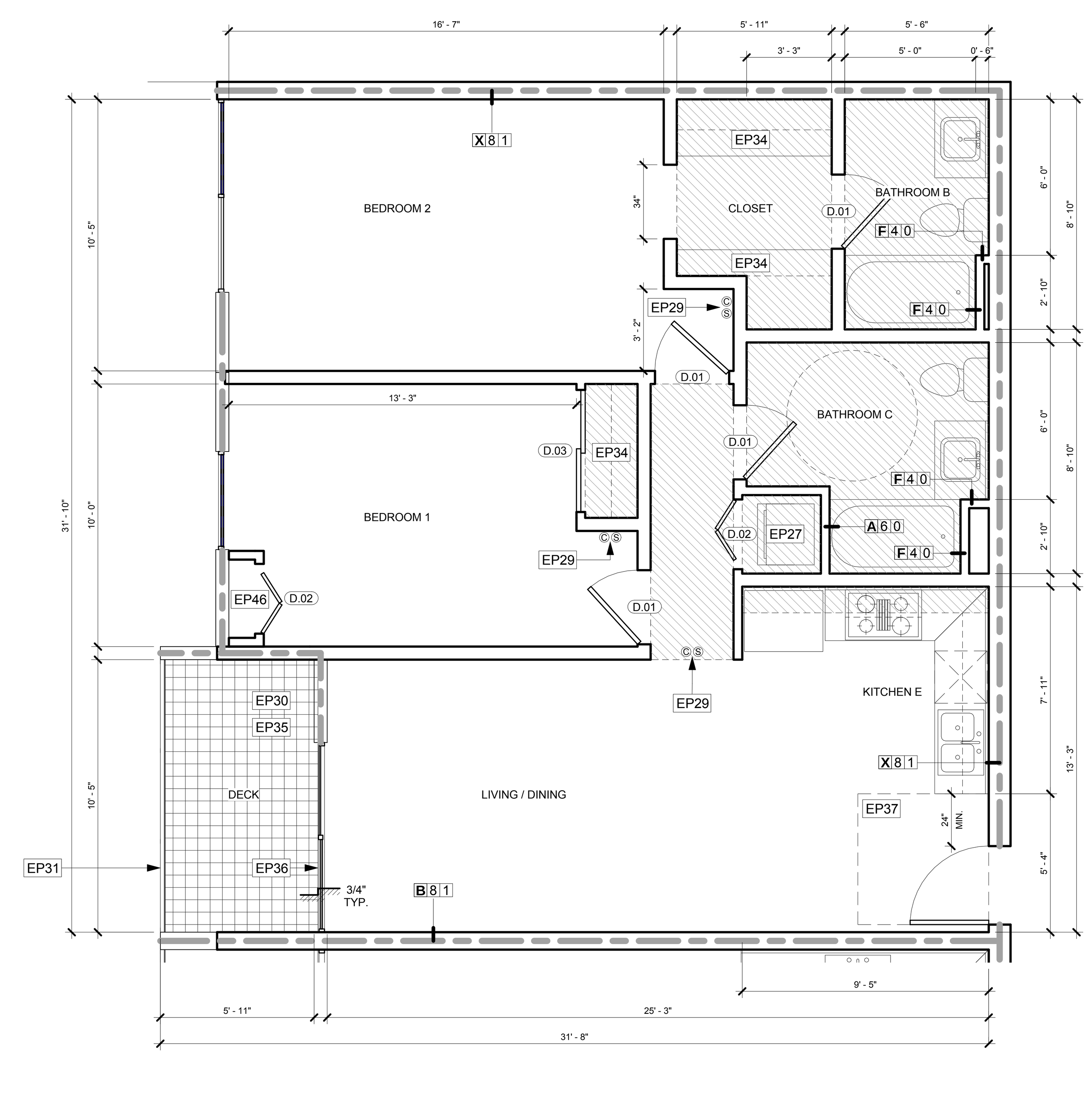

UNIT TYPE 2B SIM (UNIT 203-216-303-316) — SCALE: 1/4" = 1'-0" — 2

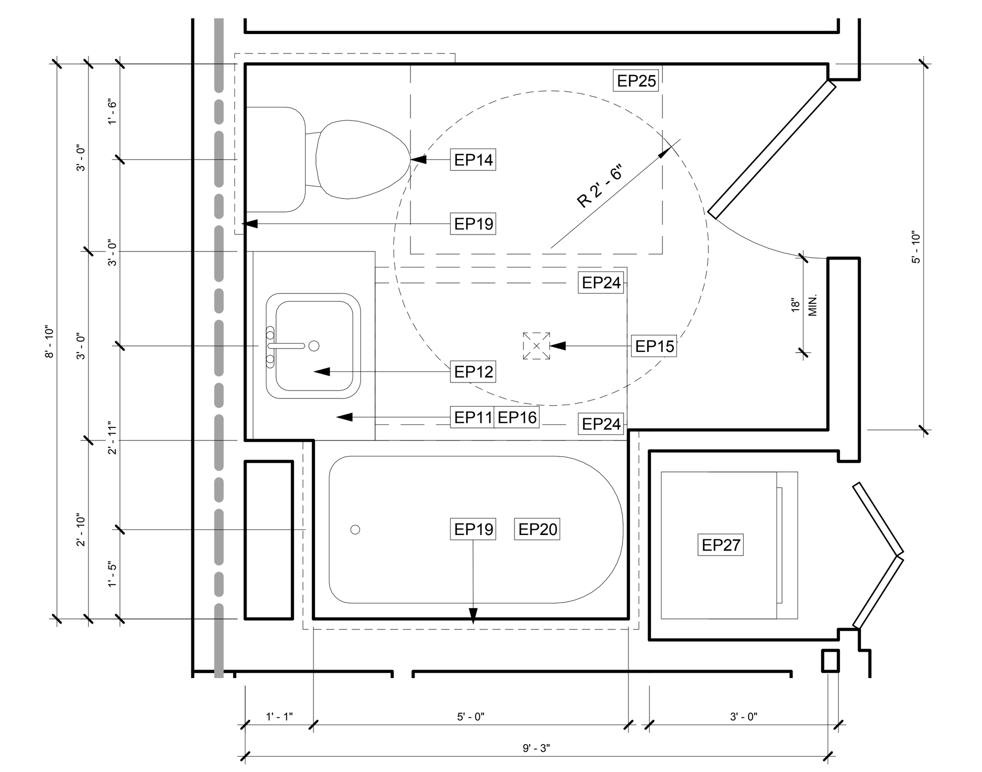

BATHROOM C - UNIT TYPE 2B / 2B SIM — SCALE: 1/2" = 1'-0" — 5

1833 N. GAREY AVE.

1833 NORTH GAREY AVENUE
PAMONA, CALIFORNIA 91767

ENLARGED 2 BEDROOM UNITS

the albert group architects
2032 Stoner Ave | Los Angeles, CA 90025 310.820.8863

C.U.P NUMBER:

PROJECT NUMBER: 14130

PROJECT STATUS: PLAN CHECK RESUBMITTAL

ISSUE DATE: 07/18/2016

SHEET NUMBER: A2.14

ENLARGED PLAN KEY NOTES

EP1 REFRIGERATOR. VERIFY W/OWNER SPACE NEEDED PENDING SPECIFICATION.
EP2 SLIDE-IN, COUNTER DEPTH, GAS RANGE.
EP3 RECIRCULATING HOOD.
EP4 CABINET ABOVE, SEE 2AD.80 FOR TYPICAL SECTION
EP5 30" WIDE SINK.
EP6 DISHWASHER.
EP7 36" HIGH, STONE TOP COUNTER, TYPICAL @ KITCHENS, SEE 1-5/A0.80 FOR TYPICAL CASEWORK SECTIONS
EP8 GARBAGE DISPOSAL
EP9 PROVIDE MINIMUM TWO 15" WIDE BREADBOARDS OR 30" WIDE WORK SPACE IN EACH KITCHEN.
EP10 30" x 48" APPROACH TO APPLIANCES, TYPICAL.
EP11 RUN FLOORING UNDER CABINET AS REQUIRED FOR A.D.A. ACCESSIBILITY TO REAR WALL. CABINET UNDER SINK TO BE TO BE REMOVABLE PER DISABLED ACCESS, SEE ACCESSIBILITY AND 1/AD.80 FOR TYPICAL SECTION. HOT WATER AND DRAIN PIPES EXPOSED UNDER SINKS SHALL BE INSULATED OR OTHERWISE CONFIGURED SO AS TO PROTECT AGAINST CONTACT. THERE SHALL BE NO SHARP OR ABRASIVE SURFACES UNDER SINKS.
EP12 UNDERMOUNT LAVATORY BASIN.
EP14 WATER CLOSET SHALL BE "ULTRA LOW FLUSH" TYPE TOILET: MAX. 1.28 GAL/FLUSH (4.8 LITERS)
EP15 LIGHT/EXHAUST FAN COMBINATION TO PROVIDE A MIN. 5 AIR CHANGES PER HOUR. BATHROOM EXHAUST FANS TO BE ENERGY STAR COMPLIANT AND CONTROLLED BY A HUMIDISTAT WHICH SHALL BE READILY ACCESSIBLE.
EP16 34" HIGH MAX STONE COUNTER TOP AT BATHROOMS.
EP18 LOCATION OF POSSIBLE FUTURE SWING AWAY GRAB BAR, TYPICAL
EP19 HANDICAP GRAB BAR BACKING, TYPICAL, SEE DETAILS 8/HC.7
EP20 66"x30" TUB / SHOWER COMBINATION, CERAMIC TILE SURROUND W/SLIDING SHOWER ENCLOSURE. VERIFY TILE LAYOUT WITH ARCHITECT.
EP22 SHATTERPROOF SHOWER ENCLOSURE, VERIFY HEIGHT AND FRAME DESIGN. SHOWER THRESHOLD @ 2" MAXIMUM HEIGHT @ 1:2

ENLARGED PLAN KEY NOTES

EP23 THRESHOLD AT 3/4" MAXIMUM HEIGHT AT 1:2 HORIZONTAL BEVELED PER SECTION 1132A.4.1.
EP24 30" x 48" APPROACH SPACES AT SINK, SHOWER AND TUB
EP25 36" x 48" APPROACH SPACE AT WATER CLOSET, UNLESS WHERE 36" x 36" IS PERMITTED PER 1134A.7.1. EXCEPTION
EP26 FRONT LOAD ADA COMPLIANT WASHER, VENTED TO EXTERIOR AS REQUIRED BY MECHANICAL CODE.
EP27 FRONT LOAD STACK WASHER AND DRYER, VENTED TO EXTERIOR AS REQUIRED BY MECHANICAL CODE.
EP28 FRONT LOAD ADA COMPLIANT DRYER, VENTED TO EXTERIOR AS REQUIRED BY MECHANICAL CODE.
EP29 HARDWIRED SMOKE DETECTOR, TYPICAL THROUGHOUT. PROVIDE APPROVED, INTERCONNECTED HARDWIRED CARBON MONOXIDE ALARM/DETECTORS WITH BATTERY BACK-UP IN HALLWAYS AND BEDROOMS.
EP30 MINIMUM CLASS "B" RATED ELASTOMERIC DECK COATING SLOPED FOR PROPER DRAINAGE, ICC# ER-5019.
EP31 42" HIGH GUARDRAIL OR GUARDRAIL WALL.
EP33 LINE OF FLOOR ABOVE.
EP34 SHELF AND POLE.
EP35 AREA OF BALCONY / PATIO, 2% MAX SLOPE, TYPICAL. VERIFY LAYOUT WITH OVERALL PLANS.
EP36 DOOR / WINDOW SHALL PROVIDE AN OPENABLE MEANS OF EGRESS WITH A MAXIMUM SILL HEIGHT NOT MORE THAN 44" ABOVE FINISHED FLOOR. SEE GN-3 / V-1.
EP37 48"x60" MINIMUM CLEAR FOR SIDE APPROACH, 60"x60" MINIMUM CLEAR FOR FRONT APPROACH, AT ENTRY TO UNITS, TYP.
EP39 ROUND EXHAUST TERMINAL, SEE ELVATION.
EP42 34" x 84" ACCESS PANEL, FOR ACCESSING AND SERVICING FCU AND DUCTWORK FOR MEZZANINE UNITS
EP46 TANKLESS WATER HEATER WITH LOUVER AND ACCESS PANEL

ENLARGED PLAN GENERAL NOTES

A. ALL EXTERIOR WALLS TO BE X 6 1 U.O.N. (EXCEPT WHEN NOTED)
B. ALL INTERIOR WALLS TO BE A 4 0 U.O.N. (EXCEPT WHEN NOTED)
C. CEILING HEIGHTS ARE MEASURED FROM TOP OF SUB FLOOR. TYP.
D. GUARDRAIL CONSTRUCTION SHALL BE CAPABLE OF RESISTING A 20 PLF HORIZONTAL LOAD PERPENDICULAR TO THE TOP RAIL PER 2010 C.B.C., SECTION 1607.7
E. PROVIDE WINDOWS SIZED FOR EMERGENCY ESCAPE AND RESUCUE COMPLIANCE AT ALL SLEEPING ROOMS, WITH MIN NET CLEAR OPENING OF 5.7 SF AND SILL HEIGHT NOT MORE THAN 44" ABOVE THE FLOOR AND OPEN DIRECTLY TO STREETS, PUBLIC ALLEYS, YARDS OR EXIT COURTS.
F. DRAFTSTOPS SHALL BE INSTALLED IN CONCEALED FLOOR AND ATTIC SPACES. DRAFTSTOPS SHALL BE INSTALLED IN LINE WITH DWELLING UNIT AND SLEEPING AREA SEPERATIONS, AND CONSTRUCTED PER 2010 C.B.C.
G. FIRE BLOCKING SHALL BE PROVIDED IN THE FOLLOWING:
   1. IN CONCEALED PLACES OF STUD WALLS AND PARTITIONS, INCLUDING FURRED SPACES, AT CEILINGS AND FLOOR LEVEL AND AT 10' INTERVALS, BOTH VERTICAL AND HORIZONTAL, PER CBC SECTION 803.
   2. AT ALL INTER-CONNECTIONS BETEEN CONCEALED VERTICAL AND HORIZONTAL SPACES SUCH AS SOFFITS, DROP AND COVED CEILINGS.
   3. IN CONCEALED SPACES BETWEEN STAIR STRINGERS AT THE TOP AND BOTTOM OF THE RUN AND BETWEEN STUDS ALONG AND IN LINE WITH THE RUN OF THE STAIRS IF THE WALLS UNDER THE STAIRS ARE UNFINISHED.
I. ALL GLAZING TO BE TEMPERED INCLUDING SHOWER/BATHTUB DOORS AND SHALL BE AFFIXED WITH A PERMANENT LABEL.
K. ALL DOORS TO HAVE A MIN 32" CLEAR DIMENSION.
L. MAXIMUM 1/2" ELEVATION DIFFERENCE AT DOOR THRESHOLDS
M. PROVIDE 24" CLEAR FROM STRIKE SIDE OF SWINGING DOOR AT PULL SIDE AND 12" AT PUSH SIDE OF ALL EXTERIOR UNIT DOORS.PROVIDE 18" CLEAR FROM STRIKE SIDE OF SWINGING DOOR AT PULL SIDE AND 12" AT PUSH SIDE OF ALL INTERIOR UNIT DOORS.
N. INTERIOR DOOR FINISHES SHALL COMPLY WITH SECTION 10.2.7 OF NFPA 101 AND SECTION 804 OF C.B.C.
O. NON-ABSORBENT INTERIOR FLOOR AND WALL FINISHES WITHIN 2' AROUND AND PERPINDICULAR TO EXTERIOR ENTRIES AND/OR OPENINGS SUBJECT TO FOOT TRAFFIC (5.407.2.2)
P. OCCUPIABLE SPACES, HABITABLE SPACES, AND CORRIDORS SHALL HAVE A CEILING HEIGH OF NOT LESS THAN 7'- 6". BATHROOMS, TOILET ROOMS, KITCHENS, STORAGE ROOMS AND LAUNDRY ROOMS SHALL BE PERMITTED TO HAVE A CEILING HEIGHT OF NOT LESS THAN 7' (1208.2). ANY ROOM WITH A FURRED CEILING SHALL BE REQUIRED TO HAVE THE MINIMUM CEILING HEIGHT IN TWO-THIRDS OF THE AREA THEREOF, BUT IN NO CASE SHALL THE HEIGHT OF THE FURRED CEILING BE LESS THAN 7'.
Q. THE FLOW RATES FOR ALL PLUMBING FIXTURES SHALL COMPLY WITH THE MAXIMUM FLOW RATES IN TABLE 4.303.1.
R. ACOUSTICAL SOUND PADS ARE REQUIRED ON ALL ELECTRICAL & LV BOXES MOUNTED IN THE CEILINGS.
S. WHEN A SHOWER IS SERVED BY MORE THAN ONE SHOWERHEAD, THE COMINED FLOW RATE OF ALL THE SHOWERHEADS AND/OR OTHER OUTLETS CONTROLLED BY A SINGLE VALVE SHALL NOT EXCEED 2.0 GALLONS PER MINUTE AT 80 PSI, OR THE SHOWER SHALL BE DESIGNED TO ONLY ALLOW ONE SHOWERHEAD TO BE IN OPERATION AT A TIME.

LEGEND

A 6 0	WALL TYPE TAG. REFER TO AD.10
	DUCT SOFFIT @ 7'-10" (7'-6" MIN.)
	1-HOUR FIRE BARRIER
	2-HOUR FIRE BARRIER
	BATHROOM EXHAUST: ENERGY STAR COMPLIANT, DUCTED TO TERMINATE OUTSIDE THE BUILDING. FANS NOT FUNCTIONING AS A COMPONENT OF A WHOLE UNIT VENTILATION SYSTEM MUST BE HUMIDITY CONTROLLED
S	SMOKE DETECTOR
C	CARBON MONOXIDE DETECTOR

RESIDENTIAL DOOR SCHEDULE

ABBREVIATIONS

*	DENOTES EGRESS	EXT	EXTERIOR	SF	STORE FRONT
ALUM	ALUMINUM	FX	FIXED	SG	SINGLE GLAZED
BF	BI-FOLDING	HC	HOLLOW CORE	SGD	SLIDING GLASS DR
CA	CASEMENT	HM	HOLLOW METAL	SI	SINGLE
CLR	CLEAR ANODIZED	INT	INTERIOR	SL	SLIDER
DB	DOUBLE	PF	PAINTED FINISH	SWG	SWING
DG	DUAL GLAZED	RG	REEDED GLASS	TG	TEMPERED GLASS
ENT	ENTRY	SC	SOLID CORE	WD	WOOD

HARDWARE GROUPS

1. MORTISE ENTRY W/ DEADBOLT
2. CYLINDER W/ PRIVACY THUMB TURN
3. CYLINDER PASSAGE
4. FINGER PULL

NO.	OPERATION	TYPE	SIZE	DETAIL REF	HDWRE
D.01	SI	WD SC	2' 10" x 7' 0"	3 | AD.50; 4 | AD50	2
D.02	BF	WD HC	2' 8" x 7' 0"	3 | AD.50; 5 | AD.50; 6 | AD.50	4
D.03	SL	WD HC	4' 8" x 7' 0"	3 | AD.50; 7 | AD.50; 8 | AD.50	4
D.04	SL	WD HC	6' 6" x 7' 0"	3 | AD.50; 7 | AD.50; 8 | AD.50	4
D.05	SL	WD HC	9' 0" x 7' 0"	3 | AD.50; 7 | AD.50; 8 | AD.50	4

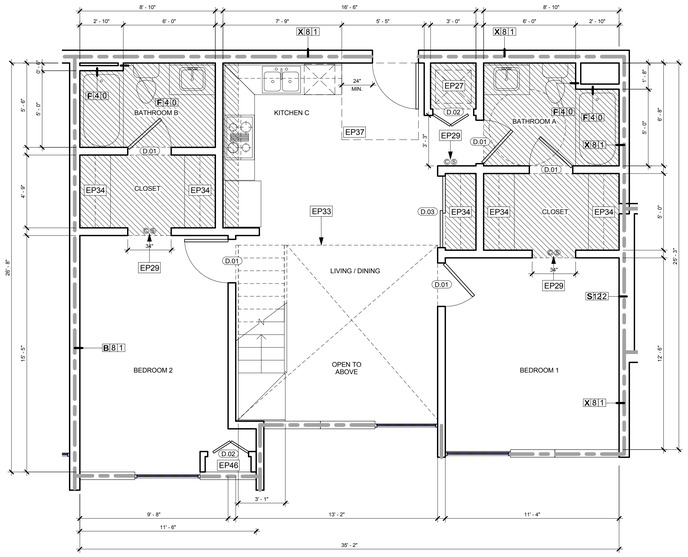

LOFT 2A.01 (UNIT 301) | SCALE: 1/4" = 1'-0" | 1

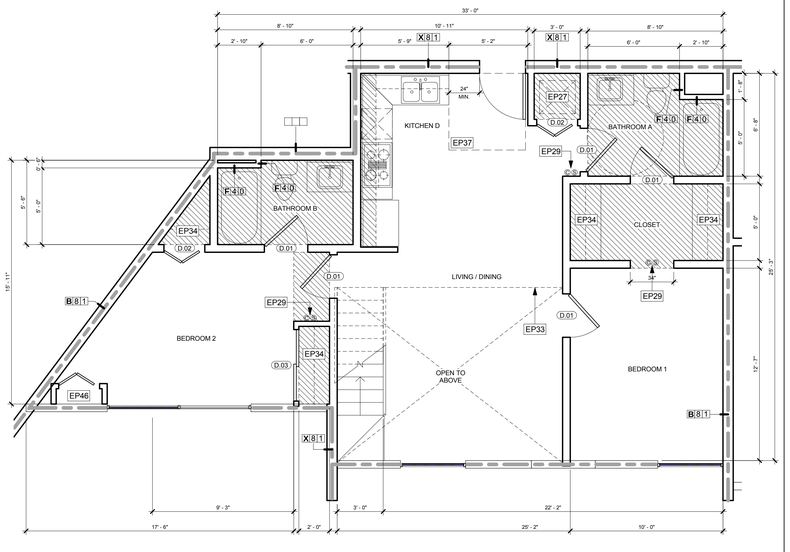

LOFT 2B.01 (UNIT 302) | SCALE: 1/4" = 1'-0" | 3

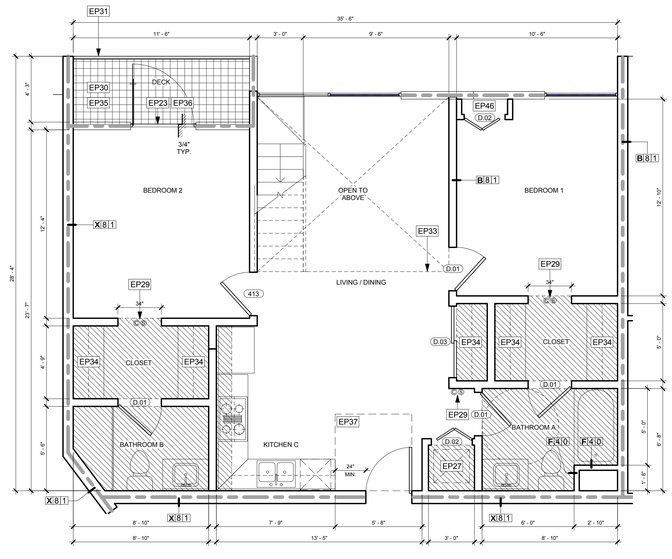

LOFT 2C.01 (UNIT 304) | SCALE: 1/4" = 1'-0" | 5

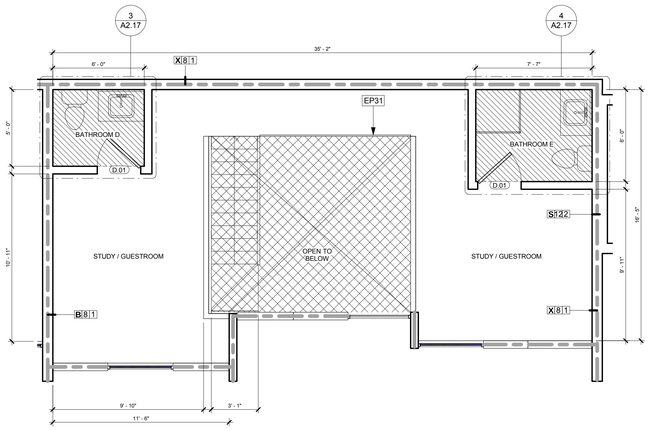

LOFT 2A.02 (UNIT 301) | SCALE: 1/4" = 1'-0" | 2

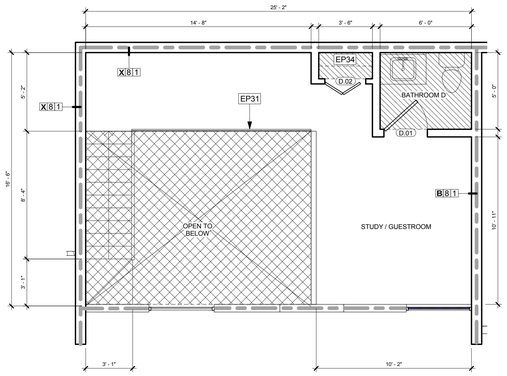

LOFT 2B.02 (UNIT 302) | SCALE: 1/4" = 1'-0" | 4

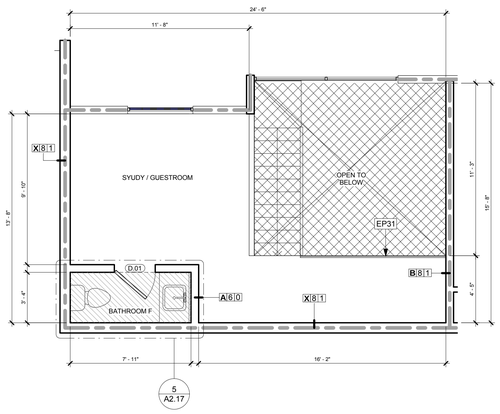

LOFT 2C.02 (UNIT 304) | SCALE: 1/4" = 1'-0" | 6

THE ABOVE DRAWINGS AND SPECIFICATIONS AND REPORTS CONTAINED HEREIN AND SHALL REMAIN THE PROPERTY OF THE ARCHITECT AND NO PART OF THE SAME MAY BE REPRODUCED OR USED OR DISCLOSED WITHOUT THE WRITTEN CONSENT OF THE ARCHITECT. VISUAL CONTACT WITH THESE DRAWINGS AND SPECIFICATIONS SHALL CONSTITUTE CONCLUSIVE EVIDENCE OF ACCEPTANCE OF THESE RESTRICTIONS.

NO.	REVISIONS	DATE
01	PLAN CHECK REVISIONS	06/06/2016

LICENSED ARCHITECT
STEPHEN M. ALBERT
NO. C 9412
REN. 5-31-13
STATE OF CALIFORNIA

1833 N. GAREY AVE.

1833 NORTH GAREY AVENUE
PAMONA, CALIFORNIA 91767

ENLARGED 2 BEDROOM LOFTS

the albert group architects
2032 Stoner Ave | Los Angeles, CA 90025 310.914.0246

C.U.P NUMBER:

PROJECT NUMBER: 14130

PROJECT STATUS: PLAN CHECK RESUBMITTAL

ISSUE DATE: 07/18/2016

SHEET NUMBER: A2.15

ENLARGED PLAN KEY NOTES

- EP1 REFRIGERATOR. VERIFY W/OWNER SPACE NEEDED PENDING SPECIFICATION.
- EP2 SLIDE-IN, COUNTER DEPTH, GAS RANGE.
- EP3 RECIRCULATING HOOD.
- EP4 CABINET ABOVE, SEE 2|AD.80 FOR TYPICAL SECTION
- EP5 30" WIDE SINK.
- EP6 DISHWASHER
- EP7 36" HIGH, STONE TOP COUNTER, TYPICAL @ KITCHENS, SEE 1-5|AD.80 FOR TYPICAL CASEWORK SECTIONS
- EP8 GARBAGE DISPOSAL
- EP9 PROVIDE MINIMUM TWO 15" WIDE BREADBOARDS OR 30" WIDE WORK SPACE IN EACH KITCHEN.
- EP10 30" x 48" APPROACH TO APPLIANCES, TYPICAL.
- EP11 RUN FLOORING UNDER CABINET AS REQUIRED FOR A.D.A. ACCESSIBILITY TO REAR WALL. CABINET UNDER SINK TO BE TO BE REMOVABLE PER DISABLED ACCESS, SEE ACCESSIBILITY AND 1|AD.80 FOR TYPICAL SECTION. HOT WATER AND DRAIN PIPES EXPOSED UNDER SINKS SHALL BE INSULATED OR OTHERWISE CONFIGURED SO AS TO PRTECT AGAINST CONTACT. THERE SHALL BE NO SHARP OR ABRASIVE SURFACES UNDER SINKS.
- EP12 UNDERMOUNT LAVATORY BASIN.
- EP14 WATER CLOSET SHALL BE "ULTRA LOW FLUSH" TYPE TOILET: MAX. 1.28 GAL/FLUSH (4.8 LITERS)
- EP15 LIGHT/EXHAUST FAN COMBINATION TO PROVIDE A MIN. 5 AIR CHANGES PER HOUR. BATHROOM EXHAUST FANS TO BE ENERGY STAR COMPLIANT AND CONTROLLED BY A HUMIDISTAT WHICH SHALL BE READILY ACCESSIBLE.
- EP16 34" HIGH MAX STONE COUNTER TOP AT BATHROOMS.
- EP18 LOCATION OF POSSIBLE FUTURE SWING AWAY GRAB BAR, TYPICAL
- EP19 HANDICAP GRAB BAR BACKING, TYPICAL, SEE DETAILS 8|HC.7
- EP20 66"x30" TUB / SHOWER COMBINATION, CERAMIC TILE SURROUND W/SLIDING SHOWER ENCLOSURE. VERIFY TILE LAYOUT WITH ARCHITECT.
- EP22 SHATTERPROOF SHOWER ENCLOSURE, VERIFY HEIGHT AND FRAME DESIGN. SHOWER THRESHOLD @ 2" MAXIMUM HEIGHT @ 1:2

ENLARGED PLAN KEY NOTES

- EP23 THRESHOLD AT 3/4" MAXIMUM HEIGHT AT 1:2 HORIZONTAL BEVELED PER SECTION 1132A.4.1.
- EP24 30" x 48" APPROACH SPACES AT SINK, SHOWER AND TUB
- EP25 36" x 48" APPROACH SPACE AT WATER CLOSET, UNLESS WHERE 36" x 36" IS PERMITTED PER 1134A.7.1. EXCEPTION
- EP26 FRONT LOAD ADA COMPLIANT WASHER, VENTED TO EXTERIOR AS REQUIRED BY MECHANICAL CODE.
- EP27 FRONT LOAD STACK WASHER AND DRYER, VENTED TO EXTERIOR AS REQUIRED BY MECHANICAL CODE.
- EP28 FRONT LOAD ADA COMPLIANT DRYER, VENTED TO EXTERIOR AS REQUIRED BY MECHANICAL CODE.
- EP29 HARDWIRED SMOKE DETECTOR, TYPICAL THROUGHOUT. PROVIDE APPROVED, INTERCONNECTED HARDWIRED CARBON MONOXIDE ALARM/DETECTORS WITH BATTERY BACK-UP IN HALLWAYS AND BEDROOMS.
- EP30 MINIMUM CLASS "B" RATED ELASTOMERIC DECK COATING SLOPED FOR PROPER DRAINAGE, ICC# ER-5019.
- EP31 42" HIGH GUARDRAIL OR GUARDRAIL WALL.
- EP33 LINE OF FLOOR ABOVE.
- EP34 SHELF AND POLE.
- EP35 AREA OF BALCONY / PATIO, 2% MAX SLOPE, TYPICAL. VERIFY LAYOUT WITH OVERALL PLANS.
- EP36 DOOR / WINDOW SHALL PROVIDE AN OPENABLE MEANS OF EGRESS WITH A MAXIMUM SILL HEIGHT NOT MORE THAN 44" ABOVE FINISHED FLOOR. SEE GN-3 / V-1.
- EP37 48"x60" MINIMUM CLEAR FOR SIDE APPROACH, 60"x60" MINIMUM CLEAR FOR FRONT APPROACH, AT ENTRY TO UNITS, TYP.
- EP39 ROUND EXHAUST TERMINAL, SEE ELVATION.
- EP42 34" x 84" ACCESS PANEL, FOR ACCESSING AND SERVICING FCU AND DUCTWORK FOR MEZZANINE UNITS
- EP46 TANKLESS WATER HEATER WITH LOUVER AND ACCESS PANEL

ENLARGED PLAN GENERAL NOTES

A. ALL EXTERIOR WALLS TO BE X 61 U.O.N. (EXCEPT WHEN NOTED)
B. ALL INTERIOR WALLS TO BE A 40 U.O.N. (EXCEPT WHEN NOTED)
C. CEILING HEIGHTS ARE MEASURED FROM TOP OF SUB FLOOR, TYP.
D. GUARDRAIL CONSTRUCTION SHALL BE CAPABLE OF RESISTING A 20 PLF HORIZONTAL LOAD PERPENDICULAR TO THE TOP RAIL PER 2010 C.B.C., SECTION 1607.7
E. PROVIDE WINDOWS SIZED FOR EMERGENCY ESCAPE AND RESUCUE COMPLIANCE AT ALL SLEEPING ROOMS, WITH MIN NET CLEAR OPENING OF 5.7 SF AND SILL HEIGHT NOT MORE THAN 44" ABOVE THE FLOOR AND OPEN DIRECTLY TO STREETS, PUBLIC ALLEYS, YARDS OR EXIT COURTS.
F. DRAFTSTOPS SHALL BE INSTALLED IN CONCEALED FLOOR AND ATTIC SPACES. DRAFTSTOPS SHALL BE INSTALLED IN LINE WITH DWELLING UNIT AND SLEEPING AREA SEPERATIONS, AND CONSTRUCTED PER 2010 C.B.C.
G. FIRE BLOCKING SHALL BE PROVIDED IN THE FOLLOWING:
   1. IN CONCEALED PLACES OF STUD WALLS AND PARTITIONS, INCLUDING FURRED SPACES, AT CEILINGS AND FLOOR LEVEL AND AT 10' INTERVALS, BOTH VERTICAL AND HORIZONTAL, PER CBC SECTION 803.
   2. AT ALL INTER-CONNECTIONS BETEEN CONCEALED VERTICAL AND HORIZONTAL SPACES SUCH AS SOFFITS, DROP AND COVED CEILINGS.
   3. IN CONCEALED SPACES BETWEEN STAIR STRINGERS AT THE TOP AND BOTTOM OF THE RUN AND BETWEEN STUDS ALONG AND IN LINE WITH THE RUN OF THE STAIRS IF THE WALLS UNDER THE STAIRS ARE UNFINISHED.
I. ALL GLAZING TO BE TEMPERED INCLUDING SHOWER/BATHTUB DOORS AND SHALL BE AFFIXED WITH A PERMANENT LABEL.
K. ALL DOORS TO HAVE A MIN 32" CLEAR DIMENSION.
L. MAXIMUM 1/2" ELEVATION DIFFERENCE AT DOOR THRESHOLDS
M. PROVIDE 24" CLEAR FROM STRIKE SIDE OF SWINGING DOOR AT PULL SIDE AND 12" AT PUSH SIDE OF ALL EXTERIOR UNIT DOORS.PROVIDE 18" CLEAR FROM STRIKE SIDE OF SWINGING DOOR AT PULL SIDE AND 12" AT PUSH SIDE OF ALL INTERIOR UNIT DOORS.
N. INTERIOR DOOR FINISHES SHALL COMPLY WITH SECTION 10.2.7 OF NFPA 101 AND SECTION 804 OF C.B.C.
O. NON-ABSORBENT INTERIOR FLOOR AND WALL FINISHES WITHIN 2' AROUND AND PERPINDICULAR TO EXTERIOR ENTRIES AND/OR OPENINGS SUBJECT TO FOOT TRAFFIC (5.407.2.2)
P. OCCUPIABLE SPACES, HABITABLE SPACES, AND CORRIDORS SHALL HAVE A CEILING HEIGH OF NOT LESS THAN 7' - 6". BATHROOMS, TOILET ROOMS, KITCHENS, STORAGE ROOMS AND LAUNDRY ROOMS SHALL BE PERMITTED TO HAVE A CEILING HEIGHT OF NOT LESS THAN 7' (1208.2). ANY ROOM WITH A FURRED CEILING SHALL BE REQUIRED TO HAVE THE MINIMUM CEILING HEIGHT IN TWO-THIRDS OF THE AREA THEREOF, BUT IN NO CASE SHALL THE HEIGHT OF THE FURRED CEILING BE LESS THAN 7'.
Q. THE FLOW RATES FOR ALL PLUMBING FIXTURES SHALL COMPLY WITH THE MAXIMUM FLOW RATES IN TABLE 4.303.1.
R. ACOUSTICAL SOUND PADS ARE REQUIRED ON ALL ELECTRICAL & LV BOXES MOUNTED IN THE CEILINGS.
S. WHEN A SHOWER IS SERVED BY MORE THAN ONE SHOWERHEAD, THE COMINED FLOW RATE OF ALL THE SHOWERHEADS AND/OR OTHER OUTLETS CONTROLLED BY A SINGLE VALVE SHALL NOT EXCEED 2.0 GALLONS PER MINUTE AT 80 PSI, OR THE SHOWER SHALL BE DESIGNED TO ONLY ALLOW ONE SHOWERHEAD TO BE IN OPERATION AT A TIME.

LEGEND

Symbol	Description
A 6 0	WALL TYPE TAG, REFER TO AD.10
	DUCT SOFFIT @ 7'-10" (7'-6" MIN.)
	1-HOUR FIRE BARRIER
	2-HOUR FIRE BARRIER
	BATHROOM EXHAUST: ENERGY STAR COMPLIANT, DUCTED TO TERMINATE OUTSIDE THE BUILDING. FANS NOT FUNCTIONING AS A COMPONENT OF A WHOLE UNIT VENTILATION SYSTEM MUST BE HUMIDITY CONTROLLED
S	SMOKE DETECTOR
C	CARBON MONOXIDE DETECTOR

RESIDENTIAL DOOR SCHEDULE

ABBREVIATIONS

*	DENOTES EGRESS	EXT	EXTERIOR	SF	STORE FRONT
ALUM	ALUMINUM	FX	FIXED	SG	SINGLE GLAZED
BF	BI-FOLDING	HC	HOLLOW CORE	SGD	SLIDING GLASS DR
CA	CASEMENT	HM	HOLLOW METAL	SI	SINGLE
CLR	CLEAR ANODIZED	INT	INTERIOR	SL	SLIDER
DB	DOUBLE	PF	PAINTED FINISH	SWG	SWING
DG	DUAL GLAZED	RG	REEDED GLASS	TG	TEMPERED GLASS
ENT	ENTRY	SC	SOLID CORE	WD	WOOD

HARDWARE GROUPS

1. MORTISE ENTRY W/ DEADBOLT
2. CYLINDER W/ PRIVACY THUMB TURN
3. CYLINDER PASSAGE
4. FINGER PULL

NO.	OPERATION	TYPE	SIZE	DETAIL REF	HDWRE
D.01	SI	WD SC	2' 10" x 7' 0"	3 | AD.50; 4 | AD50	2
D.02	BF	WD HC	2' 8" x 7' 0"	3 | AD.50; 5 | AD.50; 6 | AD.50	4
D.03	SL	WD HC	4' 8" x 7' 0"	3 | AD.50; 7 | AD.50; 8 | AD.50	4
D.04	SL	WD HC	6' 6" x 7' 0"	3 | AD.50; 7 | AD.50; 8 | AD.50	4
D.05	SL	WD HC	9' 0" x 7' 0"	3 | AD.50; 7 | AD.50; 8 | AD.50	4

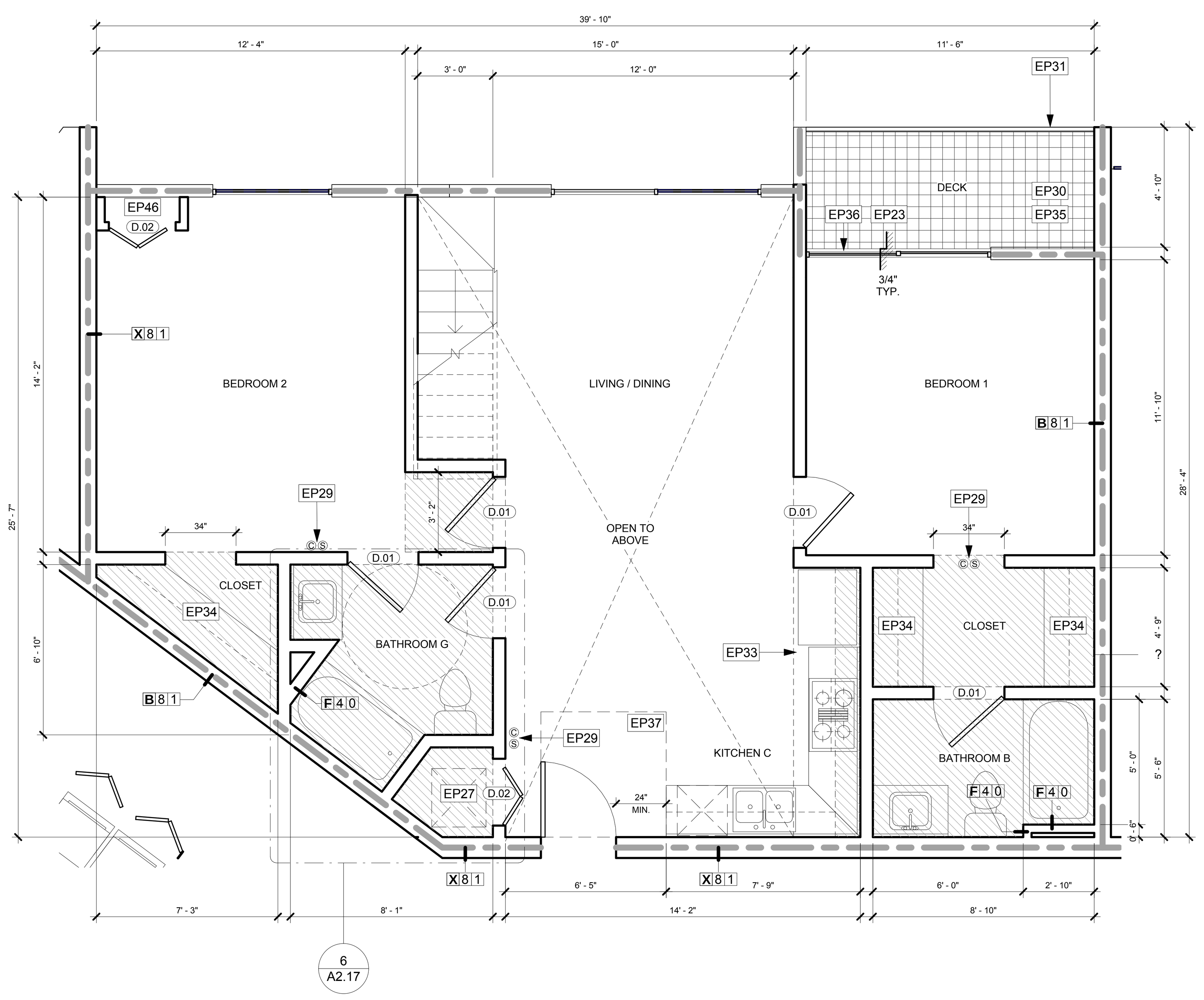

LOFT 2D.01 (UNIT 307) | SCALE: 1/4" = 1'-0" | 1

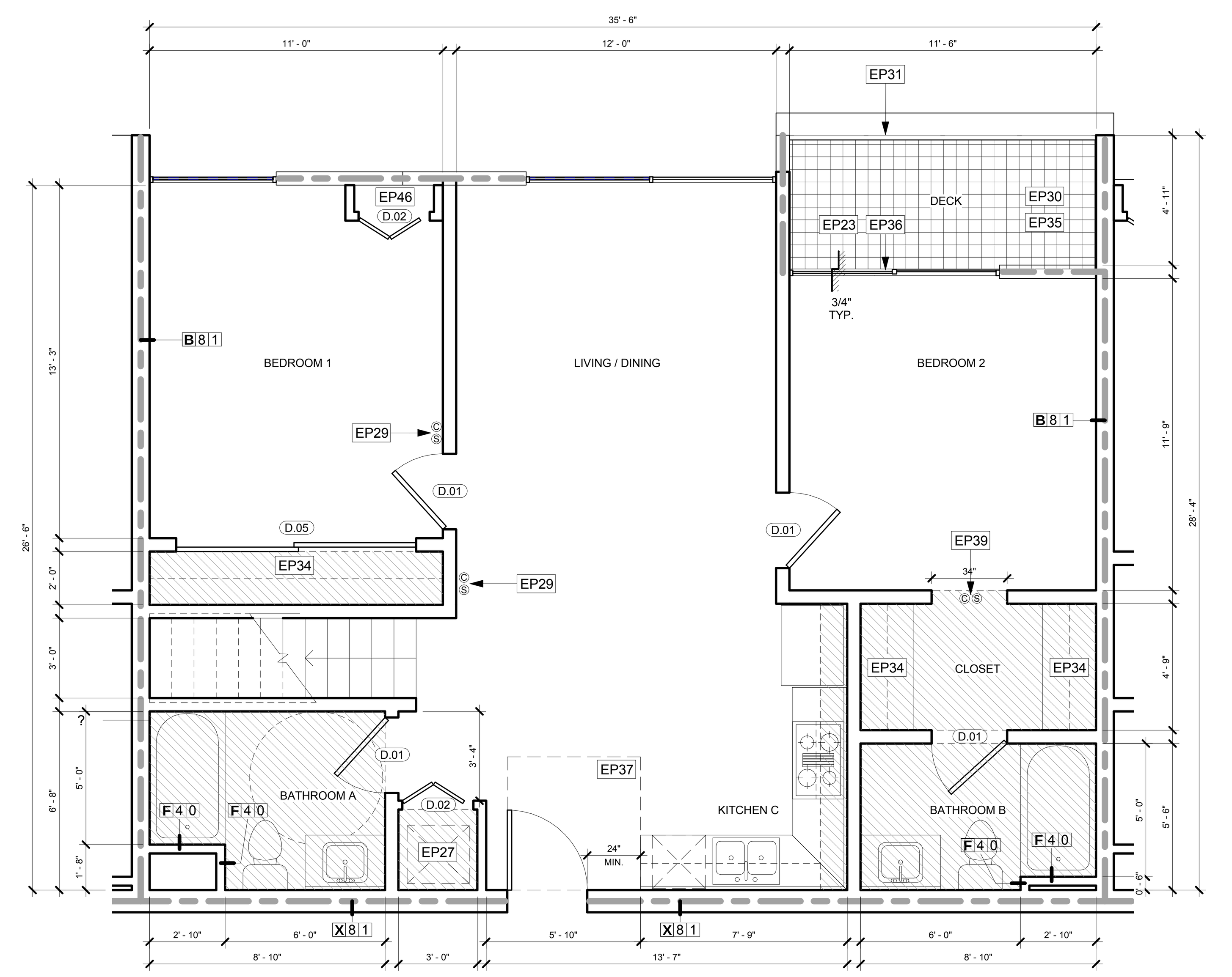

LOFT 2E.01 (UNIT 308) | SCALE: 1/4" = 1'-0" | 3

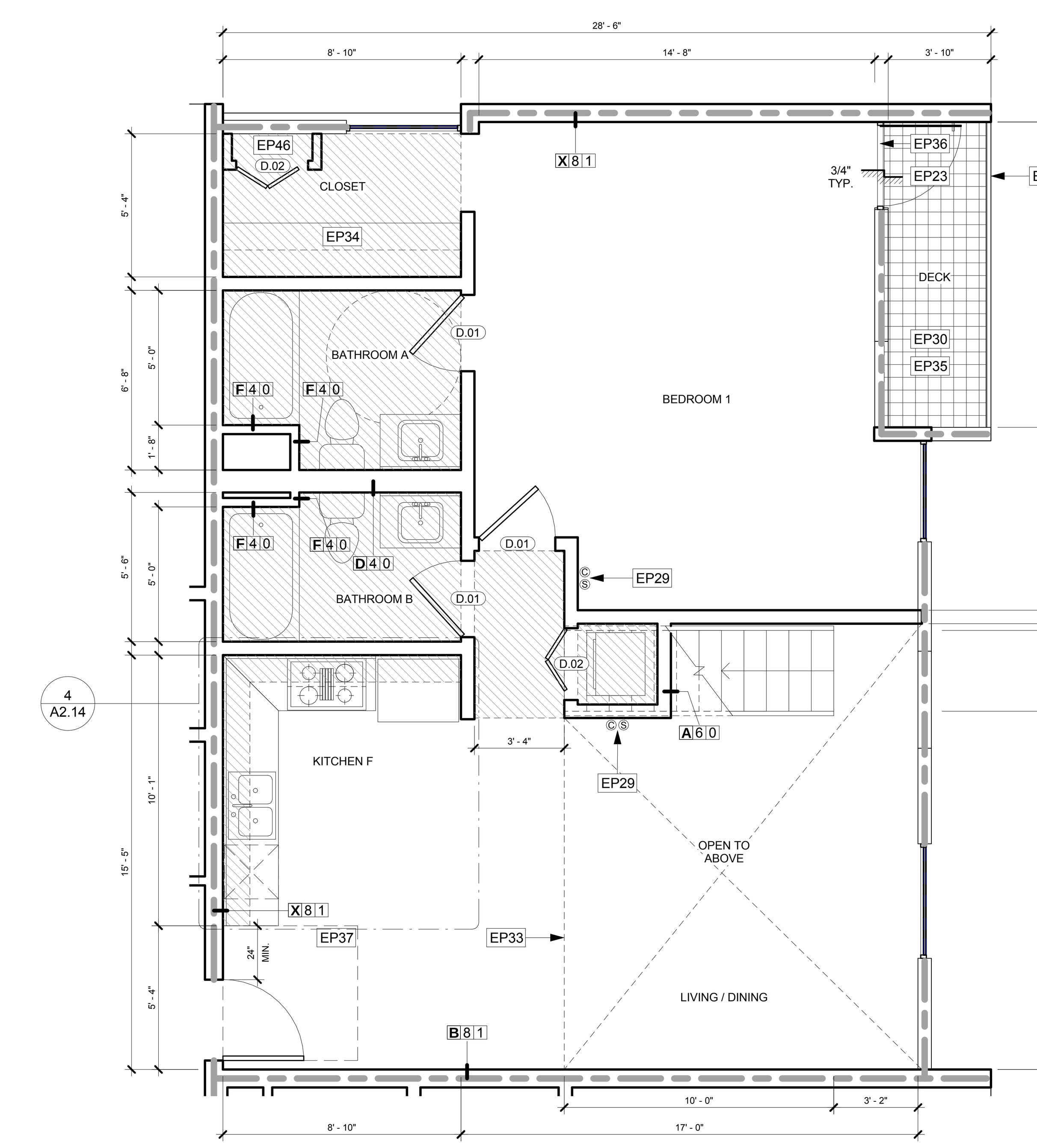

LOFT 2F.01 (UNIT 310) | SCALE: 1/4" = 1'-0" | 5

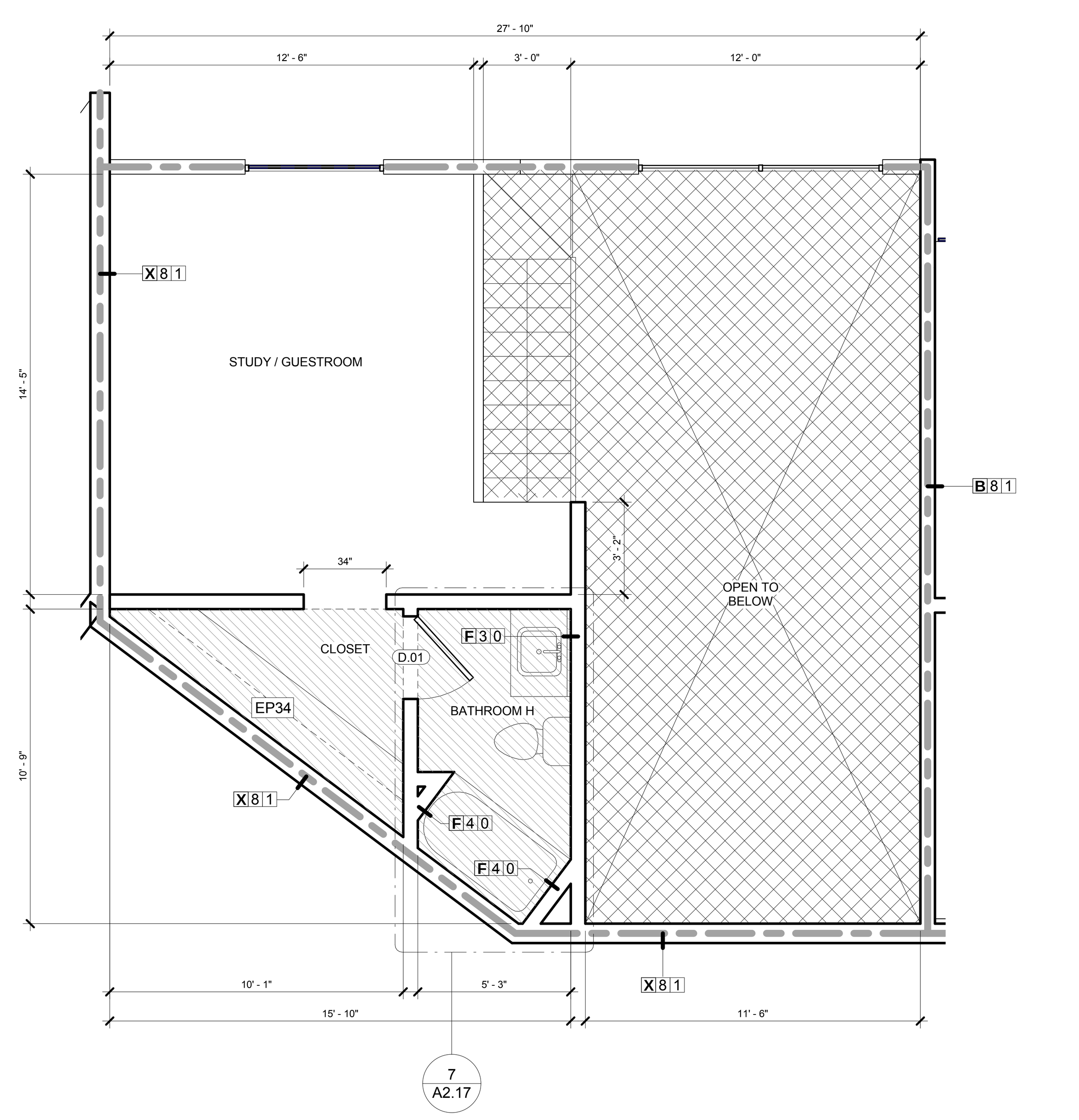

LOFT 2D.02 (UNIT 307) | SCALE: 1/4" = 1'-0" | 2

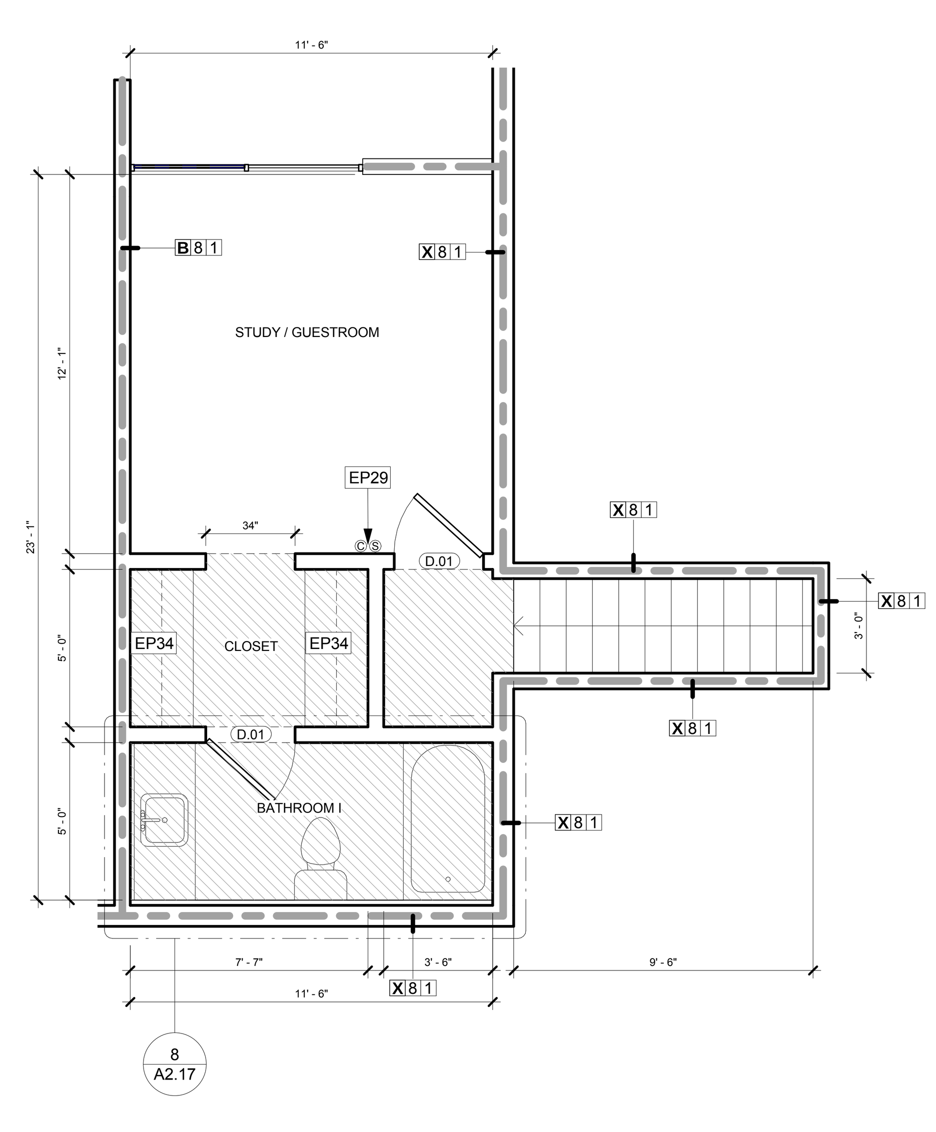

LOFT 2E.02 (UNIT 308) | SCALE: 1/4" = 1'-0" | 4

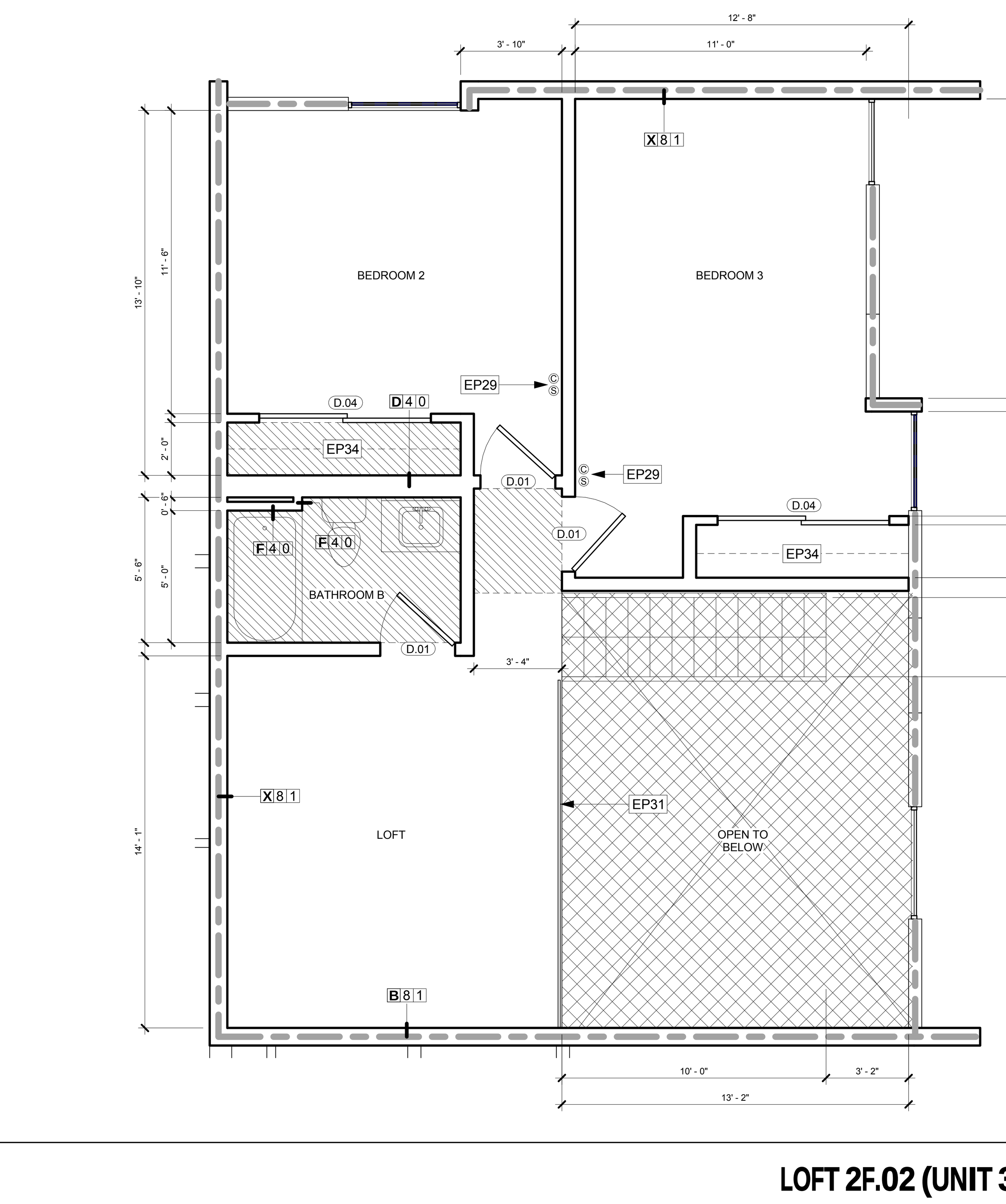

LOFT 2F.02 (UNIT 310) | SCALE: 1/4" = 1'-0" | 6

THE ABOVE DRAWINGS AND SPECIFICATIONS AND IDEAS, DESIGNS AND ARRANGEMENTS REPRESENTED THEREBY ARE AND SHALL REMAIN THE PROPERTY OF THE ARCHITECT AND NO PART THEREOF SHAL BE COPIED DISCLOSED TO OTHERS OR USED IN CONNECTION WITH ANY OTHER WORK OR PROJECT OTHER THAN THE SPECIFIC PROJECT FOR WHICH THEY HAVE BEEN PREPARED AND DEVELOPED, WITHOUT THE WRITTEN CONSENT OF THE ARCHITECT. VISUAL CONTACT WITH THESE DRAWINGS OR SPECIFICATIONS SHALL CONSTITUTE CONCLUSIVE EVIDENCE OF ACCEPTANCE OF THESE RESTRICTIONS.

NO.	REVISIONS	DATE
01	PLAN CHECK REVISIONS	06/06/2016

LICENSED ARCHITECT
STEPHEN M. ALBERT
NO. C 9412
REN. 5-31-13
STATE OF CALIFORNIA

1833 N. GAREY AVE.

1833 NORTH GAREY AVENUE
PAMONA, CALIFORNIA 91767

ENLARGED 2 BEDROOM LOFTS

the albert group architects
2032 Stoner Ave | Los Angeles, CA 90025 310.820.8863

C.U.P NUMBER:

PROJECT NUMBER: 14130

PROJECT STATUS: PLAN CHECK RESUBMITTAL

ISSUE DATE: 07/18/2016

SHEET NUMBER: A2.16

ENLARGED PLAN KEY NOTES

EP1 REFRIGERATOR. VERIFY W/OWNER SPACE NEEDED PENDING SPECIFICATION.
EP2 SLIDE-IN, COUNTER DEPTH, GAS RANGE.
EP3 RECIRCULATING HOOD.
EP4 CABINET ABOVE, SEE 2|AD.80 FOR TYPICAL SECTION
EP5 30" WIDE SINK.
EP6 DISHWASHER
EP7 36" HIGH, STONE TOP COUNTER, TYPICAL @ KITCHENS, SEE 1-5|AD.80 FOR TYPICAL CASEWORK SECTIONS
EP8 GARBAGE DISPOSAL
EP9 PROVIDE MINIMUM TWO 15" WIDE BREADBOARDS OR 30" WIDE WORK SPACE IN EACH KITCHEN.
EP10 30" x 48" APPROACH TO APPLIANCES, TYPICAL.
EP11 RUN FLOORING UNDER CABINET AS REQUIRED FOR A.D.A. ACCESSIBILITY TO REAR WALL. CABINET UNDER SINK TO BE TO BE REMOVABLE PER DISABLED ACCESS, SEE ACCESSIBILITY AND 1|AD.80 FOR TYPICAL SECTION. HOT WATER AND DRAIN PIPES EXPOSED UNDER SINKS SHALL BE INSULATED OR OTHERWISE CONFIGURED SO AS TO PRTECT AGAINST CONTACT. THERE SHALL BE NO SHARP OR ABRASIVE SURFACES UNDER SINKS.
EP12 UNDERMOUNT LAVATORY BASIN.
EP14 WATER CLOSET SHALL BE "ULTRA LOW FLUSH" TYPE TOILET: MAX. 1.28 GAL/FLUSH (4.8 LITERS)
EP15 LIGHT/EXHAUST FAN COMBINATION TO PROVIDE A MIN. 5 AIR CHANGES PER HOUR. BATHROOM EXHAUST FANS TO BE ENERGY STAR COMPLIANT AND CONTROLLED BY A HUMIDISTAT WHICH SHALL BE READILY ACCESSIBLE.
EP16 34" HIGH MAX STONE COUNTER TOP AT BATHROOMS.
EP18 LOCATION OF POSSIBLE FUTURE SWING AWAY GRAB BAR, TYPICAL
EP19 HANDICAP GRAB BAR BACKING, TYPICAL, SEE DETAILS 8|HC.7
EP20 66"x30" TUB / SHOWER COMBINATION, CERAMIC TILE SURROUND W/SLIDING SHOWER ENCLOSURE. VERIFY TILE LAYOUT WITH ARCHITECT.
EP22 SHATTERPROOF SHOWER ENCLOSURE, VERIFY HEIGHT AND FRAME DESIGN. SHOWER THRESHOLD @ 2" MAXIMUM HEIGHT @ 1:2

ENLARGED PLAN KEY NOTES

EP23 THRESHOLD AT 3/4" MAXIMUM HEIGHT AT 1:2 HORIZONTAL BEVELED PER SECTION 1132A.4.1.
EP24 30" x 48" APPROACH SPACES AT SINK, SHOWER AND TUB
EP25 36" x 48" APPROACH SPACE AT WATER CLOSET, UNLESS WHERE 36" x 36" IS PERMITTED PER 1134A.7.1. EXCEPTION
EP26 FRONT LOAD ADA COMPLIANT WASHER, VENTED TO EXTERIOR AS REQUIRED BY MECHANICAL CODE.
EP27 FRONT LOAD STACK WASHER AND DRYER, VENTED TO EXTERIOR AS REQUIRED BY MECHANICAL CODE.
EP28 FRONT LOAD ADA COMPLIANT DRYER, VENTED TO EXTERIOR AS REQUIRED BY MECHANICAL CODE.
EP29 HARDWIRED SMOKE DETECTOR, TYPICAL THROUGHOUT. PROVIDE APPROVED, INTERCONNECTED HARDWIRED CARBON MONOXIDE ALARM/DETECTORS WITH BATTERY BACK-UP IN HALLWAYS AND BEDROOMS.
EP30 MINIMUM CLASS "B" RATED ELASTOMERIC DECK COATING SLOPED FOR PROPER DRAINAGE, ICC# ER-5019.
EP31 42" HIGH GUARDRAIL OR GUARDRAIL WALL.
EP33 LINE OF FLOOR ABOVE.
EP34 SHELF AND POLE.
EP35 AREA OF BALCONY / PATIO, 2% MAX SLOPE, TYPICAL. VERIFY LAYOUT WITH OVERALL PLANS.
EP36 DOOR / WINDOW SHALL PROVIDE AN OPENABLE MEANS OF EGRESS WITH A MAXIMUM SILL HEIGHT NOT MORE THAN 44" ABOVE FINISHED FLOOR. SEE GN-3 / V-1.
EP37 48"x60" MINIMUM CLEAR FOR SIDE APPROACH, 60"x60" MINIMUM CLEAR FOR FRONT APPROACH, AT ENTRY TO UNITS, TYP.
EP39 ROUND EXHAUST TERMINAL, SEE ELVATION.
EP42 34" x 84" ACCESS PANEL, FOR ACCESSING AND SERVICING FCU AND DUCTWORK FOR MEZZANINE UNITS
EP46 TANKLESS WATER HEATER WITH LOUVER AND ACCESS PANEL

ENLARGED PLAN GENERAL NOTES

A. ALL EXTERIOR WALLS TO BE X 61 U.O.N. (EXCEPT WHEN NOTED)
B. ALL INTERIOR WALLS TO BE A 40 U.O.N. (EXCEPT WHEN NOTED)
C. CEILING HEIGHTS ARE MEASURED FROM TOP OF SUB FLOOR, TYP.
D. GUARDRAIL CONSTRUCTION SHALL BE CAPABLE OF RESISTING A 20 PLF HORIZONTAL LOAD PERPENDICULAR TO THE TOP RAIL PER 2010 C.B.C., SECTION 1607.7
E. PROVIDE WINDOWS SIZED FOR EMERGENCY ESCAPE AND RESUCUE COMPLIANCE AT ALL SLEEPING ROOMS, WITH MIN NET CLEAR OPENING OF 5.7 SF AND SILL HEIGHT NOT MORE THAN 44" ABOVE THE FLOOR AND OPEN DIRECTLY TO STREETS, PUBLIC ALLEYS, YARDS OR EXIT COURTS.
F. DRAFTSTOPS SHALL BE INSTALLED IN CONCEALED FLOOR AND ATTIC SPACES. DRAFTSTOPS SHALL BE INSTALLED IN LINE WITH DWELLING UNIT AND SLEEPING AREA SEPERATIONS, AND CONSTRUCTED PER 2010 C.B.C.
G. FIRE BLOCKING SHALL BE PROVIDED IN THE FOLLOWING:
1. IN CONCEALED PLACES OF STUD WALLS AND PARTITIONS, INCLUDING FURRED SPACES, AT CEILINGS AND FLOOR LEVEL AND AT 10' INTERVALS, BOTH VERTICAL AND HORIZONTAL, PER CBC SECTION 803.
2. AT ALL INTER-CONNECTIONS BETEEN CONCEALED VERTICAL AND HORIZONTAL SPACES SUCH AS SOFFITS, DROP AND COVED CEILINGS.
3. IN CONCEALED SPACES BETWEEN STAIR STRINGERS AT THE TOP AND BOTTOM OF THE RUN AND BETWEEN STUDS ALONG AND IN LINE WITH THE RUN OF THE STAIRS IF THE WALLS UNDER THE STAIRS ARE UNFINISHED.
I. ALL GLAZING TO BE TEMPERED INCLUDING SHOWER/BATHTUB DOORS AND SHALL BE AFFIXED WITH A PERMANENT LABEL.
K. ALL DOORS TO HAVE A MIN 32" CLEAR DIMENSION.
L. MAXIMUM 1/2" ELEVATION DIFFERENCE AT DOOR THRESHOLDS
M. PROVIDE 24" CLEAR FROM STRIKE SIDE OF SWINGING DOOR AT PULL SIDE AND 12" AT PUSH SIDE OF ALL EXTERIOR UNIT DOORS.PROVIDE 18" CLEAR FROM STRIKE SIDE OF SWINGING DOOR AT PULL SIDE AND 12" AT PUSH SIDE OF ALL INTERIOR UNIT DOORS.
N. INTERIOR DOOR FINISHES SHALL COMPLY WITH SECTION 10.2.7 OF NFPA 101 AND SECTION 804 OF C.B.C.
O. NON-ABSORBENT INTERIOR FLOOR AND WALL FINISHES WITHIN 2' AROUND AND PERPINDICULAR TO EXTERIOR ENTRIES AND/OR OPENINGS SUBJECT TO FOOT TRAFFIC (5.407.2.2)
P. OCCUPIABLE SPACES, HABITABLE SPACES, AND CORRIDORS SHALL HAVE A CEILING HEIGH OF NOT LESS THAN 7' - 6". BATHROOMS, TOILET ROOMS, KITCHENS, STORAGE ROOMS AND LAUNDRY ROOMS SHALL BE PERMITTED TO HAVE A CEILING HEIGHT OF NOT LESS THAN 7' (1208.2). ANY ROOM WITH A FURRED CEILING SHALL BE REQUIRED TO HAVE THE MINIMUM CEILING HEIGHT IN TWO-THIRDS OF THE AREA THEREOF, BUT IN NO CASE SHALL THE HEIGHT OF THE FURRED CEILING BE LESS THAN 7'.
Q. THE FLOW RATES FOR ALL PLUMBING FIXTURES SHALL COMPLY WITH THE MAXIMUM FLOW RATES IN TABLE 4.303.1.
R. ACOUSTICAL SOUND PADS ARE REQUIRED ON ALL ELECTRICAL & LV BOXES MOUNTED IN THE CEILINGS.
S. WHEN A SHOWER IS SERVED BY MORE THAN ONE SHOWERHEAD, THE COMINED FLOW RATE OF ALL THE SHOWERHEADS AND/OR OTHER OUTLETS CONTROLLED BY A SINGLE VALVE SHALL NOT EXCEED 2.0 GALLONS PER MINUTE AT 80 PSI, OR THE SHOWER SHALL BE DESIGNED TO ONLY ALLOW ONE SHOWERHEAD TO BE IN OPERATION AT A TIME.

LEGEND

A 6 0	WALL TYPE TAG, REFER TO AD.10
	DUCT SOFFIT @ 7'-10" (7'-6" MIN.)
	1-HOUR FIRE BARRIER
	2-HOUR FIRE BARRIER
	BATHROOM EXHAUST: ENERGY STAR COMPLIANT, DUCTED TO TERMINATE OUTSIDE THE BUILDING. FANS NOT FUNCTIONING AS A COMPONENT OF A WHOLE UNIT VENTILATION SYSTEM MUST BE HUMIDITY CONTROLLED
S	SMOKE DETECTOR
C	CARBON MONOXIDE DETECTOR

RESIDENTIAL DOOR SCHEDULE

ABBREVIATIONS

*	DENOTES EGRESS	EXT	EXTERIOR	SF	STORE FRONT
ALUM	ALUMINUM	FX	FIXED	SG	SINGLE GLAZED
BF	BI-FOLDING	HC	HOLLOW CORE	SGD	SLIDING GLASS DR
CA	CASEMENT	HM	HOLLOW METAL	SI	SINGLE
CLR	CLEAR ANODIZED	INT	INTERIOR	SL	SLIDER
DB	DOUBLE	PF	PAINTED FINISH	SWG	SWING
DG	DUAL GLAZED	RG	REEDED GLASS	TG	TEMPERED GLASS
ENT	ENTRY	SC	SOLID CORE	WD	WOOD

HARDWARE GROUPS

1. MORTISE ENTRY W/ DEADBOLT
2. CYLINDER W/ PRIVACY THUMB TURN
3. CYLINDER PASSAGE
4. FINGER PULL

NO.	OPERATION	TYPE	SIZE	DETAIL REF	HDWRE
D.01	SI	WD SC	2' 10" x 7' 0"	3 | AD.50; 4 | AD50	2
D.02	BF	WD HC	2' 8" x 7' 0"	3 | AD.50; 5 | AD.50; 6 | AD.50	4
D.03	SL	WD HC	4' 8" x 7' 0"	3 | AD.50; 7 | AD.50; 8 | AD.50	4
D.04	SL	WD HC	6' 6" x 7' 0"	3 | AD.50; 7 | AD.50; 8 | AD.50	4
D.05	SL	WD HC	9' 0" x 7' 0"	3 | AD.50; 7 | AD.50; 8 | AD.50	4

THE ABOVE DRAWINGS AND SPECIFICATIONS AND IDEAS, DESIGNS AND ARRANGEMENTS REPRESENTED THEREBY ARE AND SHALL REMAIN THE PROPERTY OF THE ARCHITECT AND NO PART THEREOF SHAL BE COPIED DISCLOSED TO OTHERS OR USED IN CONNECTION WITH ANY OTHER WORK OR PROJECT OTHER THAN THE SPECIFIC PROJECT FOR WHICH THEY HAVE BEEN PREPARED AND DEVELOPED, WITHOUT THE WRITTEN CONSENT OF THE ARCHITECT. VISUAL CONTACT WITH THESE DRAWINGS OR SPECIFICATIONS SHALL CONSTITUTE CONCLUSIVE EVIDENCE OF ACCEPTANCE OF THESE RESTRICTIONS.

NO.	REVISIONS	DATE
01	PLAN CHECK REVISIONS	06/06/2016

LICENSED ARCHITECT
STEPHEN M. ALBERT
NO. C 9412
REN. 5-31-13
STATE OF CALIFORNIA

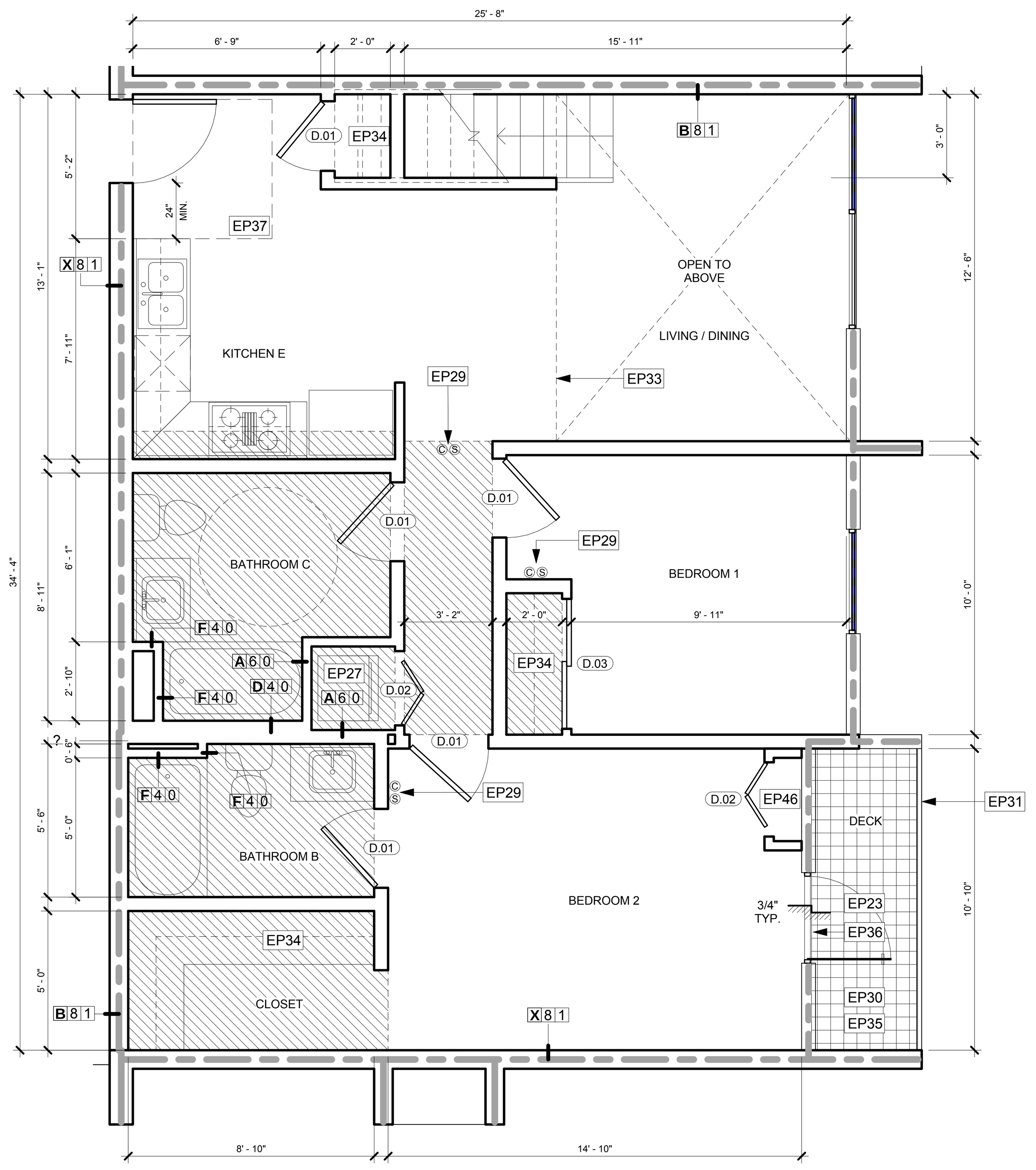

LOFT 2G.01 (UNIT 313) SCALE: 1/4" = 1'-0" 1

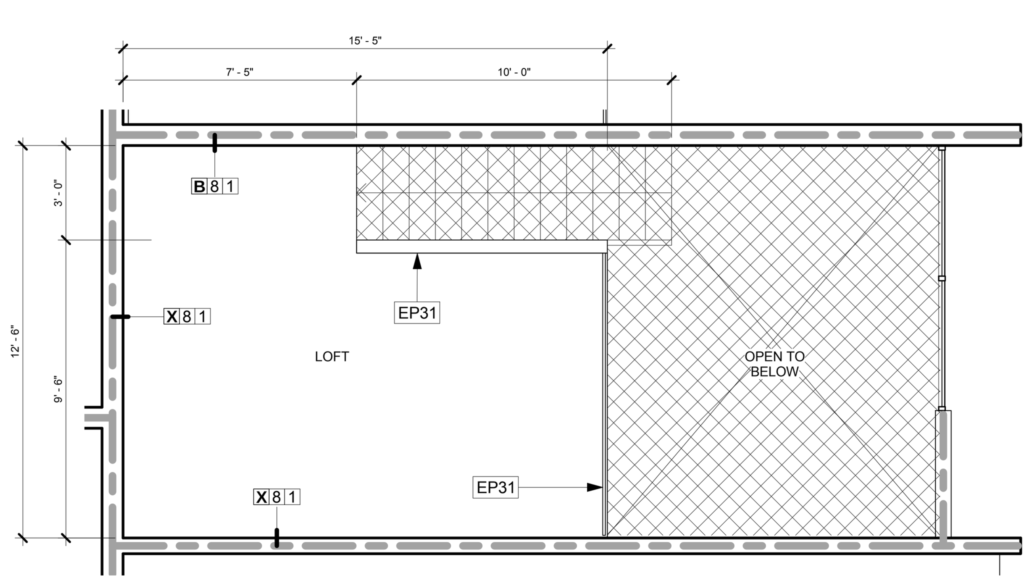

LOFT 2G.02 (UNIT 313) SCALE: 1/4" = 1'-0" 2

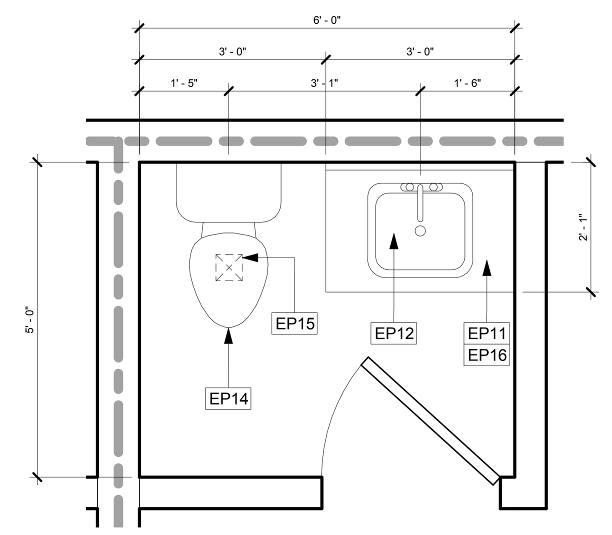

BATHROOM D - LOFT 2A / 2B SCALE: 1/2" = 1'-0" 3

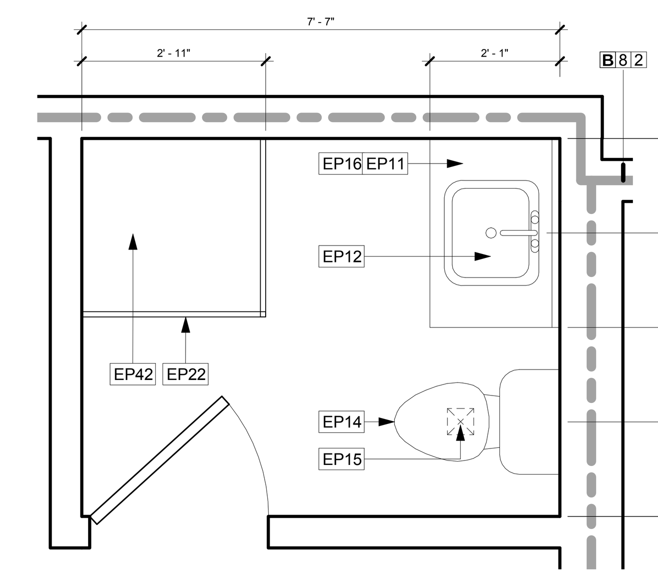

BATHROOM E - LOFT 2A SCALE: 1/2" = 1'-0" 4

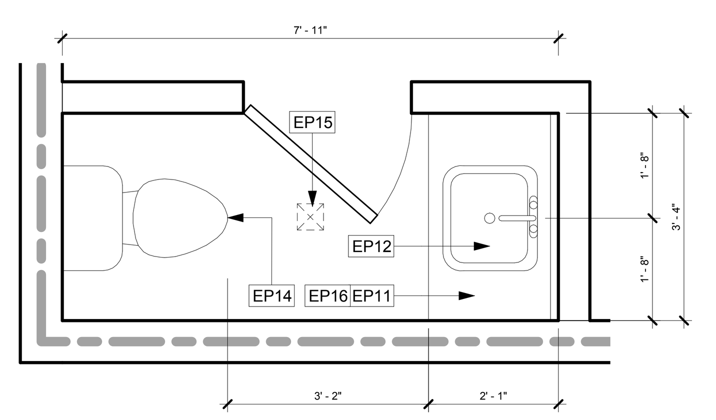

BATHROOM F - LOFT 2C SCALE: 1/2" = 1'-0" 5

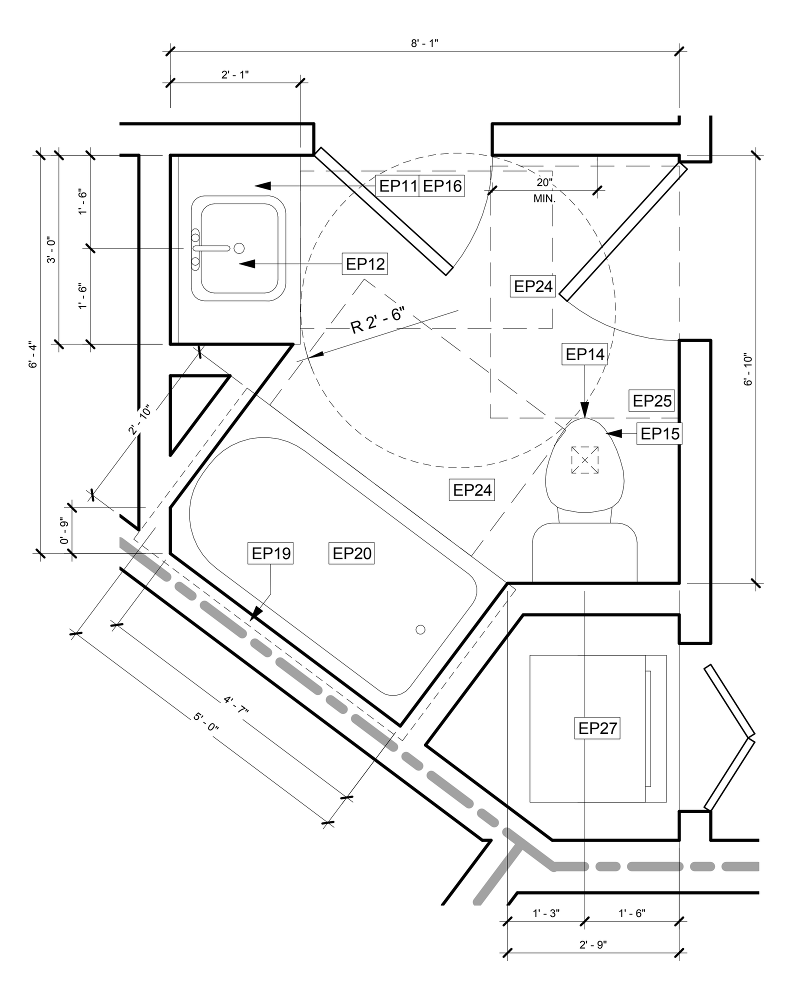

BATHROOM G - LOFT 2D SCALE: 1/2" = 1'-0" 6

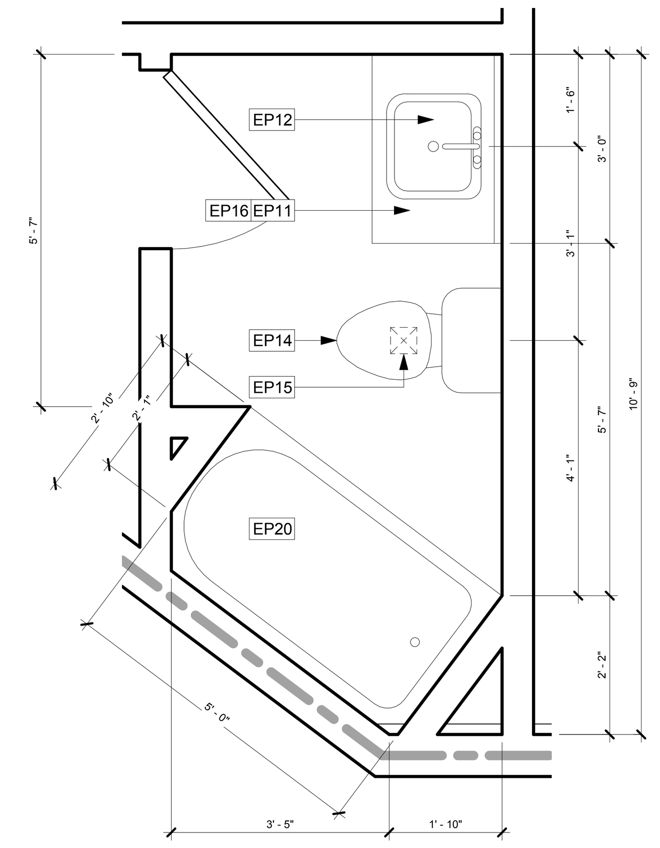

BATHROOM H - UNIT 207 / LOFT 2D SCALE: 1/2" = 1'-0" 7

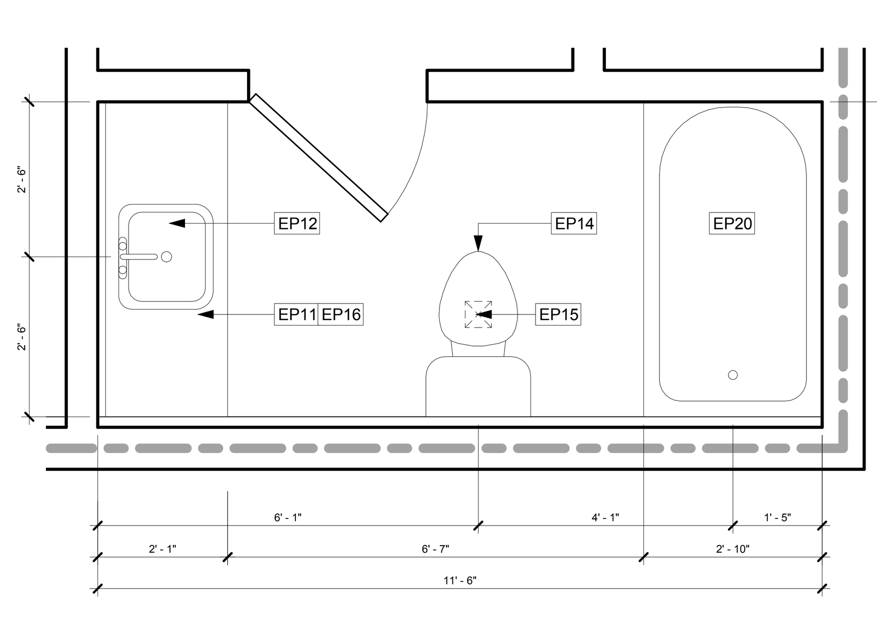

BATHROOM I - LOFT 2E SCALE: 1/2" = 1'-0" 8

1833 N. GAREY AVE.

1833 NORTH GAREY AVENUE
PAMONA, CALIFORNIA 91767

ENLARGED 2 BEDROOM LOFTS

the albert group architects
2032 Stoner Ave | Los Angeles, CA 90025 310.820.8863

C.U.P NUMBER:

PROJECT NUMBER: 14130

PROJECT STATUS: PLAN CHECK RESUBMITTAL

ISSUE DATE: 07/18/2016

SHEET NUMBER: A2.17

ENLARGED PLAN KEY NOTES

EP1 REFRIGERATOR. VERIFY W/OWNER SPACE NEEDED PENDING SPECIFICATION.
EP2 SLIDE-IN, COUNTER DEPTH, GAS RANGE.
EP3 RECIRCULATING HOOD.
EP4 CABINET ABOVE. SEE 2AD.80 FOR TYPICAL SECTION
EP5 30" WIDE SINK.
EP6 DISHWASHER
EP7 36" HIGH, STONE TOP COUNTER, TYPICAL @ KITCHENS, SEE 1-5|AD.80 FOR TYPICAL CASEWORK SECTIONS
EP8 GARBAGE DISPOSAL
EP9 PROVIDE MINIMUM TWO 15" WIDE BREADBOARDS OR 30" WIDE WORK SPACE IN EACH KITCHEN.
EP10 30" x 48" APPROACH TO APPLIANCES, TYPICAL.
EP11 RUN FLOORING UNDER CABINET AS REQUIRED FOR A.D.A. ACCESSIBILITY TO REAR WALL. CABINET UNDER SINK TO BE TO BE REMOVABLE PER DISABLED ACCESS, SEE ACCESSIBILITY AND 1|AD.80 FOR TYPICAL SECTION. HOT WATER AND DRAIN PIPES EXPOSED UNDER SINKS SHALL BE INSULATED OR OTHERWISE CONFIGURED SO AS TO PRTECT AGAINST CONTACT. THERE SHALL BE NO SHARP OR ABRASIVE SURFACES UNDER SINKS.
EP12 UNDERMOUNT LAVATORY BASIN.
EP14 WATER CLOSET SHALL BE "ULTRA LOW FLUSH" TYPE TOILET: MAX. 1.28 GAL/FLUSH (4.8 LITERS)
EP15 LIGHT/EXHAUST FAN COMBINATION TO PROVIDE A MIN. 5 AIR CHANGES PER HOUR. BATHROOM EXHAUST FANS TO BE ENERGY STAR COMPLIANT AND CONTROLLED BY A HUMIDISTAT WHICH SHALL BE READILY ACCESSIBLE.
EP16 34" HIGH MAX STONE COUNTER TOP AT BATHROOMS.
EP18 LOCATION OF POSSIBLE FUTURE SWING AWAY GRAB BAR, TYPICAL
EP19 HANDICAP GRAB BAR BACKING, TYPICAL, SEE DETAILS 8|HC.7
EP20 66"x30" TUB / SHOWER COMBINATION. CERAMIC TILE SURROUND W/SLIDING SHOWER ENCLOSURE. VERIFY TILE LAYOUT WITH ARCHITECT.
EP22 SHATTERPROOF SHOWER ENCLOSURE. VERIFY HEIGHT AND FRAME DESIGN. SHOWER THRESHOLD @ 2" MAXIMUM HEIGHT @ 1:2

ENLARGED PLAN KEY NOTES

EP23 THRESHOLD AT 3/4" MAXIMUM HEIGHT AT 1:2 HORIZONTAL BEVELED PER SECTION 1132A.4.1.
EP24 30" x 48" APPROACH SPACES AT SINK, SHOWER AND TUB
EP25 36" x 48" APPROACH SPACE AT WATER CLOSET, UNLESS WHERE 36" x 36" IS PERMITTED PER 1134A.7.1. EXCEPTION
EP26 FRONT LOAD ADA COMPLIANT WASHER, VENTED TO EXTERIOR AS REQUIRED BY MECHANICAL CODE.
EP27 FRONT LOAD STACK WASHER AND DRYER, VENTED TO EXTERIOR AS REQUIRED BY MECHANICAL CODE.
EP28 FRONT LOAD ADA COMPLIANT DRYER, VENTED TO EXTERIOR AS REQUIRED BY MECHANICAL CODE.
EP29 HARDWIRED SMOKE DETECTOR, TYPICAL THROUGHOUT. PROVIDE APPROVED, INTERCONNECTED HARDWIRED CARBON MONOXIDE ALARM/DETECTORS WITH BATTERY BACK-UP IN HALLWAYS AND BEDROOMS.
EP30 MINIMUM CLASS "B" RATED ELASTOMERIC DECK COATING SLOPED FOR PROPER DRAINAGE, ICC# ER-5019.
EP31 42" HIGH GUARDRAIL OR GUARDRAIL WALL.
EP33 LINE OF FLOOR ABOVE.
EP34 SHELF AND POLE.
EP35 AREA OF BALCONY / PATIO, 2% MAX SLOPE, TYPICAL. VERIFY LAYOUT WITH OVERALL PLANS.
EP36 DOOR / WINDOW SHALL PROVIDE AN OPENABLE MEANS OF EGRESS WITH A MAXIMUM SILL HEIGHT NOT MORE THAN 44" ABOVE FINISHED FLOOR. SEE GN-3 / V-1.
EP37 48"x60" MINIMUM CLEAR FOR SIDE APPROACH, 60"x60" MINIMUM CLEAR FOR FRONT APPROACH, AT ENTRY TO UNITS, TYP.
EP39 ROUND EXHAUST TERMINAL, SEE ELVATION.
EP42 34" x 84" ACCESS PANEL, FOR ACCESSING AND SERVICING FCU AND DUCTWORK FOR MEZZANINE UNITS
EP46 TANKLESS WATER HEATER WITH LOUVER AND ACCESS PANEL

ENLARGED PLAN GENERAL NOTES

A. ALL EXTERIOR WALLS TO BE X|6|1 U.O.N. (EXCEPT WHEN NOTED)
B. ALL INTERIOR WALLS TO BE A|6|0 U.O.N. (EXCEPT WHEN NOTED)
C. CEILING HEIGHTS ARE MEASURED FROM TOP OF SUB FLOOR, TYP.
D. GUARDRAIL CONSTRUCTION SHALL BE CAPABLE OF RESISTING A 20 PLF HORIZONTAL LOAD PERPENDICULAR TO THE TOP RAIL PER 2010 C.B.C., SECTION 1607.7
E. PROVIDE WINDOWS SIZED FOR EMERGENCY ESCAPE AND RESUCUE COMPLIANCE AT ALL SLEEPING ROOMS, WITH MIN NET CLEAR OPENING OF 5.7 SF AND SILL HEIGHT NOT MORE THAN 44" ABOVE THE FLOOR AND OPEN DIRECTLY TO STREETS, PUBLIC ALLEYS, YARDS OR EXIT COURTS.
F. DRAFTSTOPS SHALL BE INSTALLED IN CONCEALED FLOOR AND ATTIC SPACES. DRAFTSTOPS SHALL BE INSTALLED IN LINE WITH DWELLING UNIT AND SLEEPING AREA SEPERATIONS, AND CONSTRUCTED PER 2010 C.B.C.
G. FIRE BLOCKING SHALL BE PROVIDED IN THE FOLLOWING:
   1. IN CONCEALED PLACES OF STUD WALLS AND PARTITIONS, INCLUDING FURRED SPACES, AT CEILINGS AND FLOOR LEVEL AND AT 10' INTERVALS, BOTH VERTICAL AND HORIZONTAL, PER CBC SECTION 803.
   2. AT ALL INTER-CONNECTIONS BETEEN CONCEALED VERTICAL AND HORIZONTAL SPACES SUCH AS SOFFITS, DROP AND COVED CEILINGS.
   3. IN CONCEALED SPACES BETWEEN STAIR STRINGERS AT THE TOP AND BOTTOM OF THE RUN AND BETWEEN STUDS ALONG AND IN LINE WITH THE RUN OF THE STAIRS IF THE WALLS UNDER THE STAIRS ARE UNFINISHED.
I. ALL GLAZING TO BE TEMPERED INCLUDING SHOWER/BATHTUB DOORS AND SHALL BE AFFIXED WITH A PERMANENT LABEL.
K. ALL DOORS TO HAVE A MIN 32" CLEAR DIMENSION.
L. MAXIMUM 1/2" ELEVATION DIFFERENCE AT DOOR THRESHOLDS
M. PROVIDE 24" CLEAR FROM STRIKE SIDE OF SWINGING DOOR AT PULL SIDE AND 12" AT PUSH SIDE OF ALL EXTERIOR UNIT DOORS.PROVIDE 18" CLEAR FROM STRIKE SIDE OF SWINGING DOOR AT PULL SIDE AND 12" AT PUSH SIDE OF ALL INTERIOR UNIT DOORS.
N. INTERIOR DOOR FINISHES SHALL COMPLY WITH SECTION 10.2.7 OF NFPA 101 AND SECTION 804 OF C.B.C.
O. NON-ABSORBENT INTERIOR FLOOR AND WALL FINISHES WITHIN 2' AROUND AND PERPINDICULAR TO EXTERIOR ENTRIES AND/OR OPENINGS SUBJECT TO FOOT TRAFFIC (5.407.2.2)
P. OCCUPIABLE SPACES, HABITABLE SPACES, AND CORRIDORS SHALL HAVE A CEILING HEIGH OF NOT LESS THAN 7' -6". BATHROOMS, TOILET ROOMS, KITCHENS, STORAGE ROOMS AND LAUNDRY ROOMS SHALL BE PERMITTED TO HAVE A CEILING HEIGHT OF NOT LESS THAN 7' (1208.2). ANY ROOM WITH A FURRED CEILING SHALL BE REQUIRED TO HAVE THE MINIMUM CEILING HEIGHT IN TWO-THIRDS OF THE AREA THEREOF, BUT IN NO CASE SHALL THE HEIGHT OF THE FURRED CEILING BE LESS THAN 7'.
Q. THE FLOW RATES FOR ALL PLUMBING FIXTURES SHALL COMPLY WITH THE MAXIMUM FLOW RATES IN TABLE 4.303.1.
R. ACOUSTICAL SOUND PADS ARE REQUIRED ON ALL ELECTRICAL & LV BOXES MOUNTED IN THE CEILINGS.
S. WHEN A SHOWER IS SERVED BY MORE THAN ONE SHOWERHEAD, THE COMINED FLOW RATE OF ALL THE SHOWERHEADS AND/OR OTHER OUTLETS CONTROLLED BY A SINGLE VALVE SHALL NOT EXCEED 2.0 GALLONS PER MINUTE AT 80 PSI, OR THE SHOWER SHALL BE DESIGNED TO ONLY ALLOW ONE SHOWERHEAD TO BE IN OPERATION AT A TIME.

LEGEND

A|6|0 WALL TYPE TAG, REFER TO AD.10
DUCT SOFFIT @ 7'-10" (7'-6" MIN.)
1-HOUR FIRE BARRIER
2-HOUR FIRE BARRIER
BATHROOM EXHAUST: ENERGY STAR COMPLIANT, DUCTED TO TERMINATE OUTSIDE THE BUILDING. FANS NOT FUNCTIONING AS A COMPONENT OF A WHOLE UNIT VENTILATION SYSTEM MUST BE HUMIDITY CONTROLLED
S SMOKE DETECTOR
C CARBON MONOXIDE DETECTOR

RESIDENTIAL DOOR SCHEDULE

ABBREVIATIONS

*	DENOTES EGRESS	EXT	EXTERIOR	SF	STORE FRONT
ALUM	ALUMINUM	FX	FIXED	SG	SINGLE GLAZED
BF	BI-FOLDING	HC	HOLLOW CORE	SGD	SLIDING GLASS DR
CA	CASEMENT	HM	HOLLOW METAL	SI	SINGLE
CLR	CLEAR ANODIZED	INT	INTERIOR	SL	SLIDER
DB	DOUBLE	PF	PAINTED FINISH	SWG	SWING
DG	DUAL GLAZED	RG	REEDED GLASS	TG	TEMPERED GLASS
ENT	ENTRY	SC	SOLID CORE	WD	WOOD

HARDWARE GROUPS

1. MORTISE ENTRY W/ DEADBOLT
2. CYLINDER W/ PRIVACY THUMB TURN
3. CYLINDER PASSAGE
4. FINGER PULL

NO.	OPERATION	TYPE	SIZE	DETAIL REF	HDWRE
D.01	SI	WD SC	2' 10" x 7' 0"	3 | AD.50; 4 | AD50	2
D.02	BF	WD HC	2' 8" x 7' 0"	3 | AD.50; 5 | AD.50; 6 | AD.50	4
D.03	SL	WD HC	4' 8" x 7' 0"	3 | AD.50; 7 | AD.50; 8 | AD.50	4
D.04	SL	WD HC	6' 6" x 7' 0"	3 | AD.50; 7 | AD.50; 8 | AD.50	4
D.05	SL	WD HC	9' 0" x 7' 0"	3 | AD.50; 7 | AD.50; 8 | AD.50	4

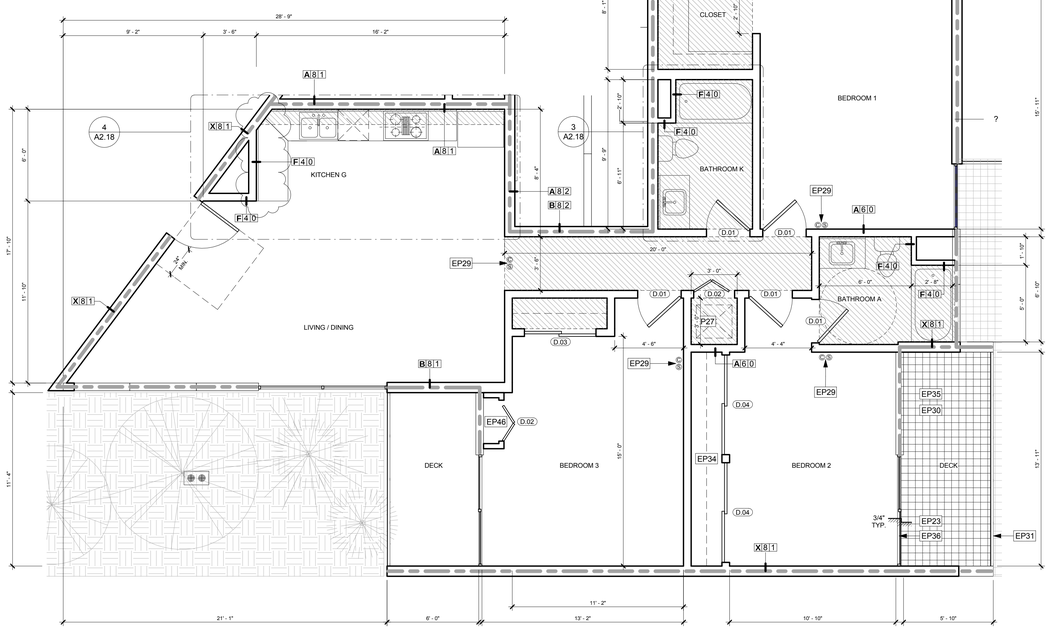

UNIT TYPE 3A (UNIT 218-317) | SCALE: 1/4" = 1'-0" | 1

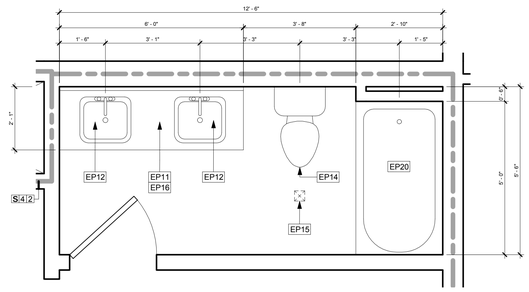

BATHROOM J - UNIT TYPE 3A | SCALE: 1/2" = 1'-0" | 2

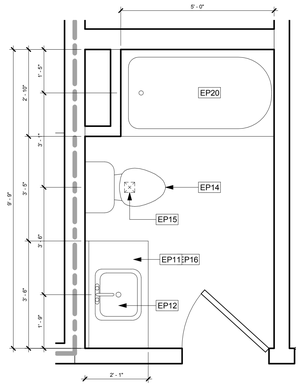

BATHROOM K - UNIT TYPE 3A | SCALE: 1/2" = 1'-0" | 3

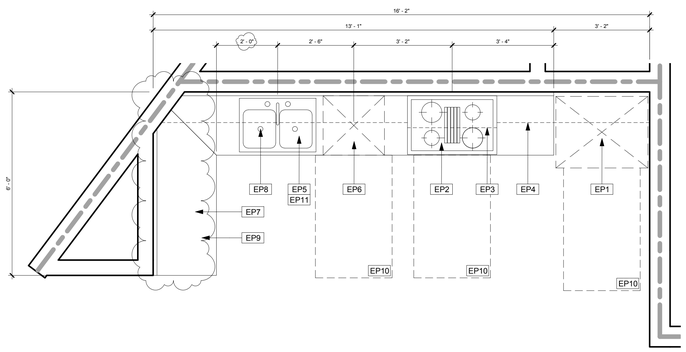

KITCHEN G - UNIT TYPE 3A | SCALE: 1/2" = 1'-0" | 4

THE ABOVE DRAWINGS AND SPECIFICATIONS AND REPORTS CONTAINED HEREIN, AND SHALL REMAIN THE PROPERTY OF THE ARCHITECT AND NO PART THEREOF SHALL BE CONVEYED OR REPRODUCED OR USED IN CONNECTION WITH ANY OTHER WORK OR PROJECT OTHER THAN THE SPECIFIC PROJECT FOR WHICH THEY HAVE BEEN PREPARED AND DEVELOPED, WITHOUT THE WRITTEN CONSENT OF THE ARCHITECT. VISUAL CONTACT WITH THESE DRAWINGS AND SPECIFICATIONS SHALL CONSTITUTE CONCLUSIVE EVIDENCE OF ACCEPTANCE OF THESE RESTRICTIONS.

NO.	REVISIONS	DATE
01	PLAN CHECK REVISIONS	06/06/2016

LICENSED ARCHITECT
STEPHEN M. ALBERT
NO. C 9412
REN. 5-31-13
STATE OF CALIFORNIA

1833 N. GAREY AVE.

1833 NORTH GAREY AVENUE
PAMONA, CALIFORNIA 91767

ENLARGED 3 BEDROOM UNIT

the albert group architects
21032 Stoner Ave | Los Angeles, CA 90025 310.820.0303

C.U.P NUMBER:

PROJECT NUMBER: 14130
PROJECT STATUS: PLAN CHECK RESUBMITTAL
ISSUE DATE: 07/18/2016
SHEET NUMBER: A2.18

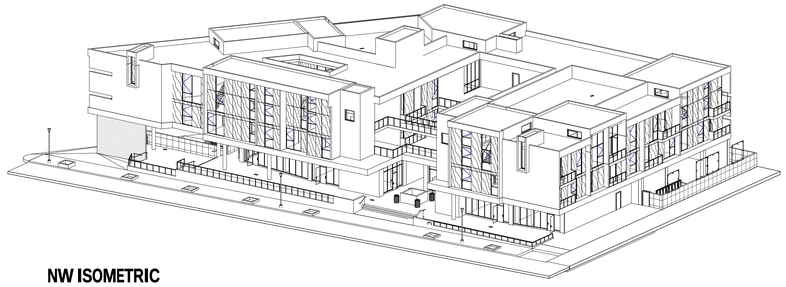

NW ISOMETRIC

ELEVATION KEY NOTES

E1	SMOOTH FINISH CEMENT PLASTER, LA HABRA X-50 CRYSTAL WHITE OR APPROVED EQUAL
E2	SYNTHETIC WOOD COMPOSITE PANEL RAINSCREEN OVER SCRATCH COAT OF STUCCO PAINTED BLACK, TRESPA AMBER FINISH OR APPROVED EQUAL
E3	CURTAIN WALL SYSTEM: SOLARBAN 60 IGU WITH CLEAR ANNODIZED ALUMINUM FINISH WINDOW SYSTEM
E4	GLASS RAILING SYSTEM
E5	BOARD-FORMED CONCRETE
E6	STOREFRONT SIGN
E7	MONUMENT SIGN
E8	PYLON SIGN
E9	8" CMU WALL ORCO SPLIT FACED BLACK BLOCK, 6' - 0" ABOVE FINISHED GRADE
E11	EXPOSED CONCRETE COLUMN
E12	FIRE DEPARTMENT POINT OF CONNECTION
E13	LOCATION OF TRANSFORMER
E14	FREESTANDING WOODEN GREEN SCREEN
E15	STAIR AND/OR ELEVATOR OVERRUN
E16	WALL MOUNTED WOODEN GREEN SCREEN
E17	ALUMINIUM FIXED WINDOW PER SCHEDULE
E18	ALUMINIUM WINDOW PER SCHEDULE
E20	ALUMINIUM DOOR PER SCHEDULE
E21	ALUM. BREAK METAL, FINISH TO MATCH WINDOW WALL SYSTEM
E22	STUCCO PLASTER CONTROL JOINT

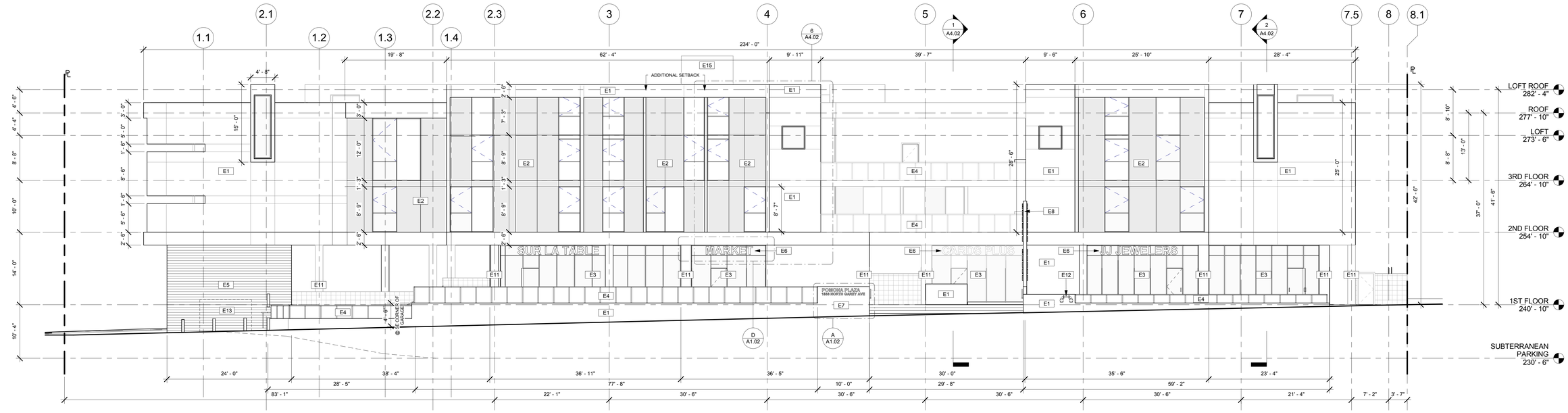

EAST | SCALE: 1/8" = 1'-0" | 2

LOBBY PERSPECTIVE

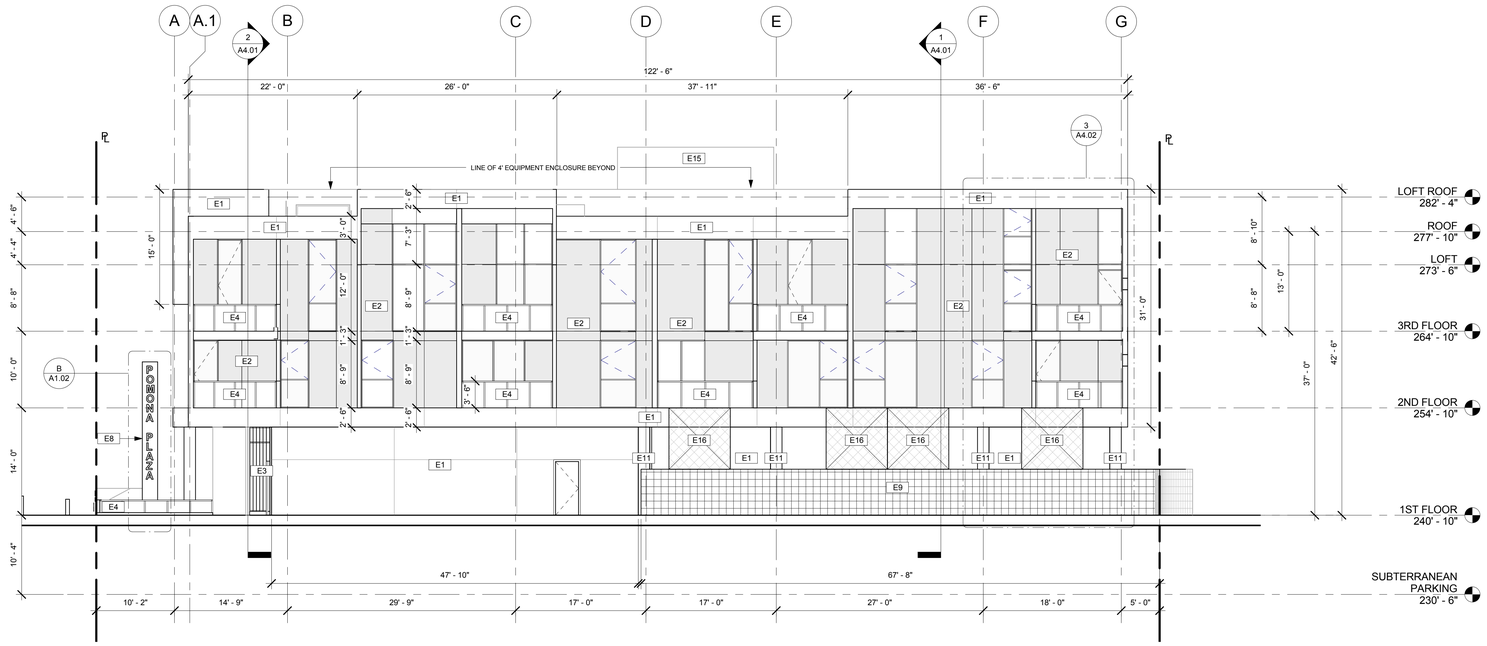

NORTH | SCALE: 1/8" = 1'-0" | 1

THE ABOVE DRAWINGS AND SPECIFICATIONS AND REPRESENTATIONS HEREBY ARE AND SHALL REMAIN THE PROPERTY OF THE ARCHITECT AND NO PART THEREOF SHALL BE COPIED, DISCLOSED TO OTHERS OR USED IN CONNECTION WITH ANY OTHER WORK OR PROJECT OTHER THAN THE SPECIFIC PROJECT FOR WHICH THEY HAVE BEEN PREPARED AND DEVELOPED, WITHOUT THE WRITTEN CONSENT OF THE ARCHITECT. VISUAL CONTACT WITH THESE DOCUMENTS SHALL CONSTITUTE EVIDENCE OF ACCEPTANCE OF THESE RESTRICTIONS.

NO.	REVISIONS	DATE
01	PLAN CHECK REVISIONS	06/06/2016

LICENSED ARCHITECT
STEPHEN M. ALBERT
NO. C 9412
REN. 5-31-13
STATE OF CALIFORNIA

1833 N. GAREY AVE.

1833 NORTH GAREY AVENUE
PAMONA, CALIFORNIA 91767

BUILDING ELEVATIONS

the albert group architects
2032 Stoner Ave. Los Angeles, CA 90025 310.820.6345

C.U.P NUMBER:

PROJECT NUMBER: 14130

PROJECT STATUS: PLAN CHECK RESUBMITTAL

ISSUE DATE: 07/18/2016

SHEET NUMBER: A3.01

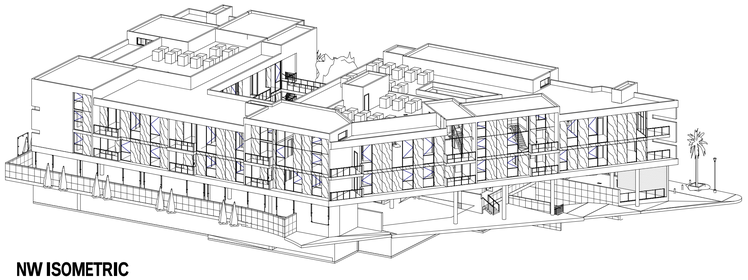

NW ISOMETRIC

ELEVATION KEY NOTES

E1	SMOOTH FINISH CEMENT PLASTER, LA HABRA X-50 CRYSTAL WHITE OR APPROVED EQUAL
E2	SYNTHETIC WOOD COMPOSITE PANEL RAINSCREEN OVER SCRATCH COAT OF STUCCO PAINTED BLACK, TRESPA AMBER FINISH OR APPROVED EQUAL
E3	CURTAIN WALL SYSTEM: SOLARBAN 60 IGU WITH CLEAR ANNODIZED ALUMINUM FINISH WINDOW SYSTEM
E4	GLASS RAILING SYSTEM
E5	BOARD-FORMED CONCRETE
E6	STOREFRONT SIGN
E7	MONUMENT SIGN
E8	PYLON SIGN
E9	8" CMU WALL ORCO SPLIT FACED BLACK BLOCK, 6' - 0" ABOVE FINISHED GRADE
E11	EXPOSED CONCRETE COLUMN
E12	FIRE DEPARTMENT POINT OF CONNECTION
E13	LOCATION OF TRANSFORMER
E14	FREESTANDING WOODEN GREEN SCREEN
E15	STAIR AND/OR ELEVATOR OVERRUN
E16	WALL MOUNTED WOODEN GREEN SCREEN
E17	ALUMINIUM FIXED WINDOW PER SCHEDULE
E18	ALUMINIUM WINDOW PER SCHEDULE
E20	ALUMINIUM DOOR PER SCHEDULE
E21	ALUM. BREAK METAL, FINISH TO MATCH WINDOW WALL SYSTEM
E22	STUCCO PLASTER CONTROL JOINT

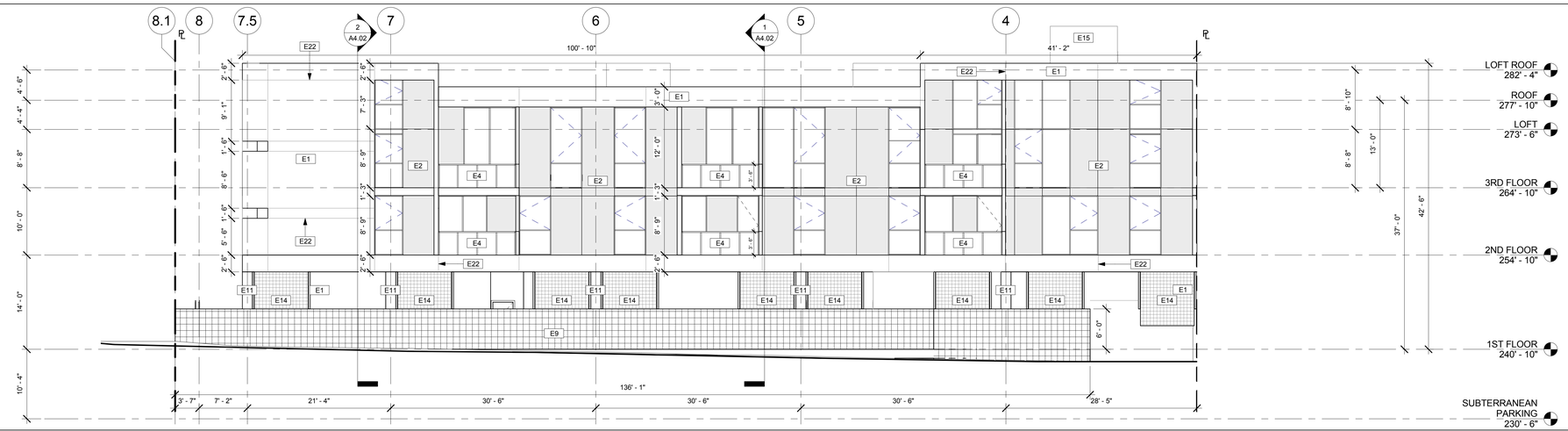

WEST SCALE: 1/8" = 1'-0" **1**

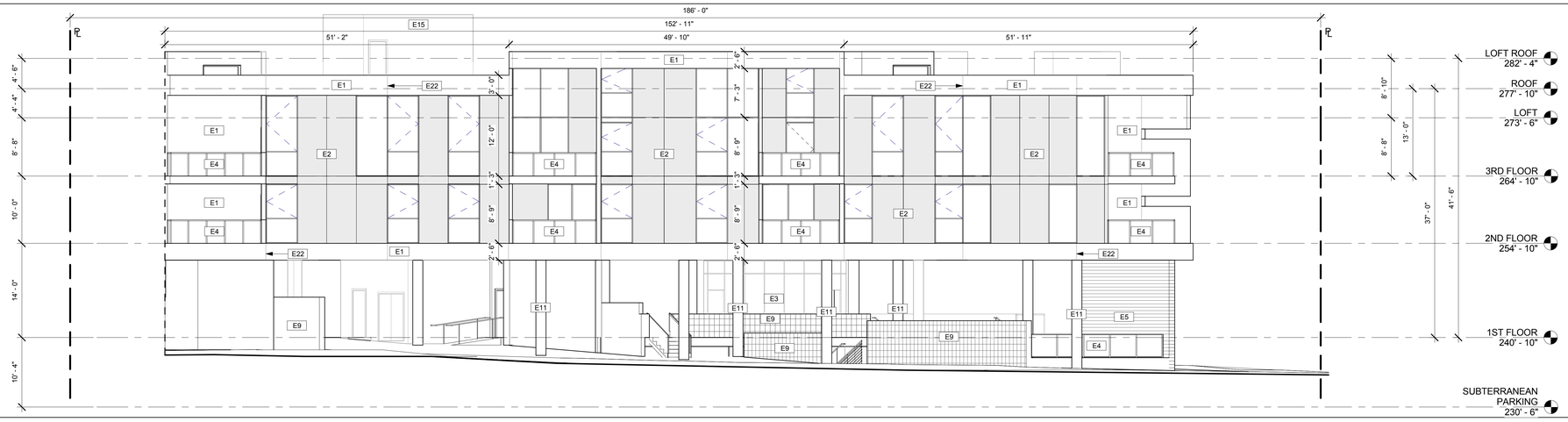

SOUTH SCALE: 1/8" = 1'-0" **2**

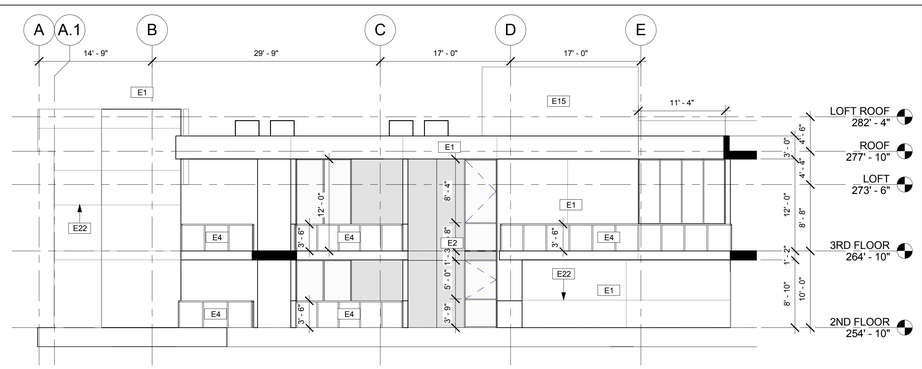

EAST COURTYARD SCALE: 1/8" = 1'-0" **3**

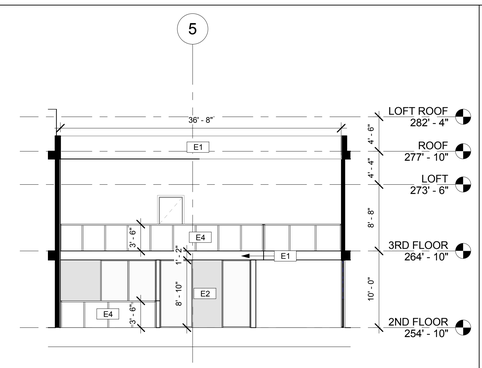

SOUTH COURTYARD SCALE: 1/8" = 1'-0" **4**

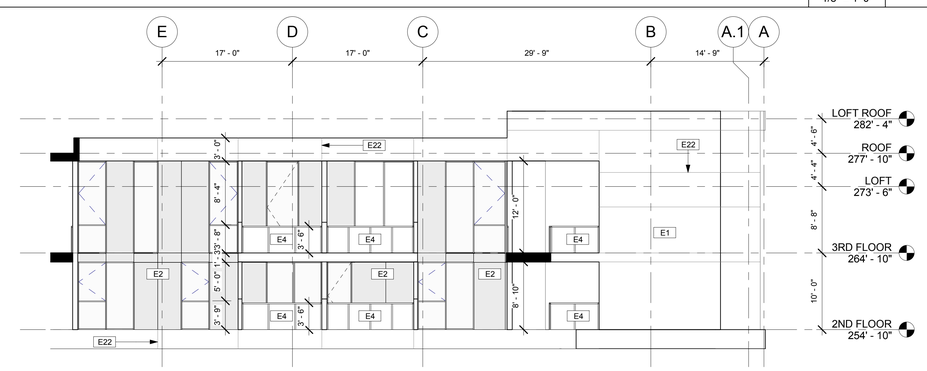

WEST COURTYARD SCALE: 1/8" = 1'-0" **5**

THE ABOVE DRAWINGS AND SPECIFICATIONS AND REPORTS AND DESIGNS ARE NOW AND SHALL REMAIN THE PROPERTY OF THE ARCHITECT AND NO PART THEREOF SHALL BE CONVEYED TO OTHERS OR USED IN CONNECTION WITH ANY OTHER WORK OR PROJECT OTHER THAN THE SPECIFIC PROJECT FOR WHICH THEY HAVE BEEN PREPARED AND DEVELOPED, WITHOUT THE WRITTEN CONSENT OF THE ARCHITECT. VISUAL CONTACT WITH THESE DRAWINGS OR OTHER DOCUMENTS SHALL CONSTITUTE CONCLUSIVE EVIDENCE OF ACCEPTANCE OF THESE RESTRICTIONS.

NO.	REVISIONS	DATE
01	PLAN CHECK REVISIONS	06/06/2016

LICENSED ARCHITECT
STEPHEN M. ALBERT
NO. C 9412
REN. 5-31-13
STATE OF CALIFORNIA

1833 N. GAREY AVE.

1833 NORTH GAREY AVENUE
PAMONA, CALIFORNIA 91767

BUILDING ELEVATIONS

the albert group architects
21032 Stoner Ave | Los Angeles, CA 90025 310.273.2223

C.U.P. NUMBER:

PROJECT NUMBER: **14130**

PROJECT STATUS: **PLAN CHECK RESUBMITTAL**

ISSUE DATE: **07/18/2016**

SHEET NUMBER: **A3.02**

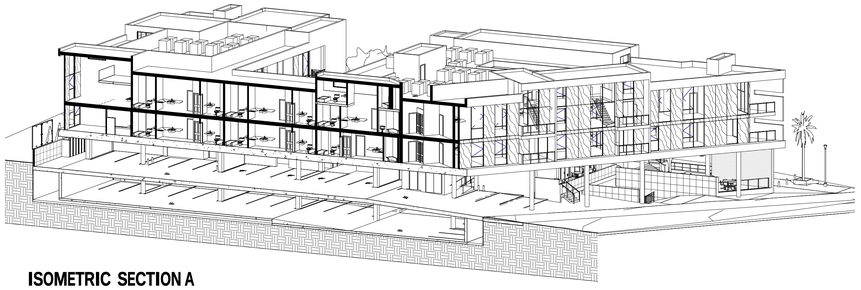

ISOMETRIC SECTION A

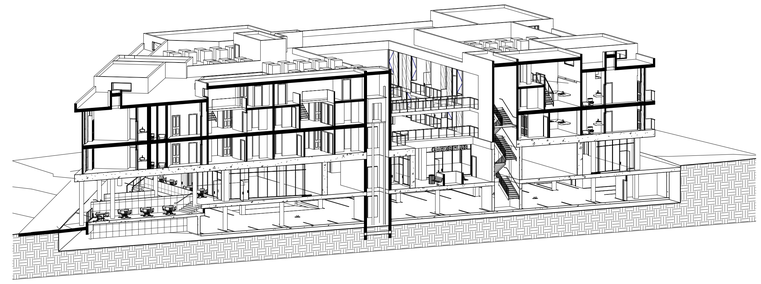

ISOMETRIC SECTION B

ELEVATION KEY NOTES

E1	SMOOTH FINISH CEMENT PLASTER, LA HABRA X-50 CRYSTAL WHITE OR APPROVED EQUAL
E2	SYNTHETIC WOOD COMPOSITE PANEL RAINSCREEN OVER SCRATCH COAT OF STUCCO PAINTED BLACK, TRESPA AMBER FINISH OR APPROVED EQUAL
E3	CURTAIN WALL SYSTEM: SOLARBAN 60 IGU WITH CLEAR ANNODIZED ALUMINUM FINISH WINDOW SYSTEM
E4	GLASS RAILING SYSTEM
E5	BOARD-FORMED CONCRETE
E6	STOREFRONT SIGN
E7	MONUMENT SIGN
E8	PYLON SIGN
E9	8" CMU WALL ORCO SPLIT FACED BLACK BLOCK, 6' - 0" ABOVE FINISHED GRADE
E11	EXPOSED CONCRETE COLUMN
E12	FIRE DEPARTMENT POINT OF CONNECTION
E13	LOCATION OF TRANSFORMER
E14	FREESTANDING WOODEN GREEN SCREEN
E15	STAIR AND/OR ELEVATOR OVERRUN
E16	WALL MOUNTED WOODEN GREEN SCREEN
E17	ALUMINIUM FIXED WINDOW PER SCHEDULE
E18	ALUMINIUM WINDOW PER SCHEDULE
E20	ALUMINIUM DOOR PER SCHEDULE
E21	ALUM. BREAK METAL, FINISH TO MATCH WINDOW WALL SYSTEM
E22	STUCCO PLASTER CONTROL JOINT

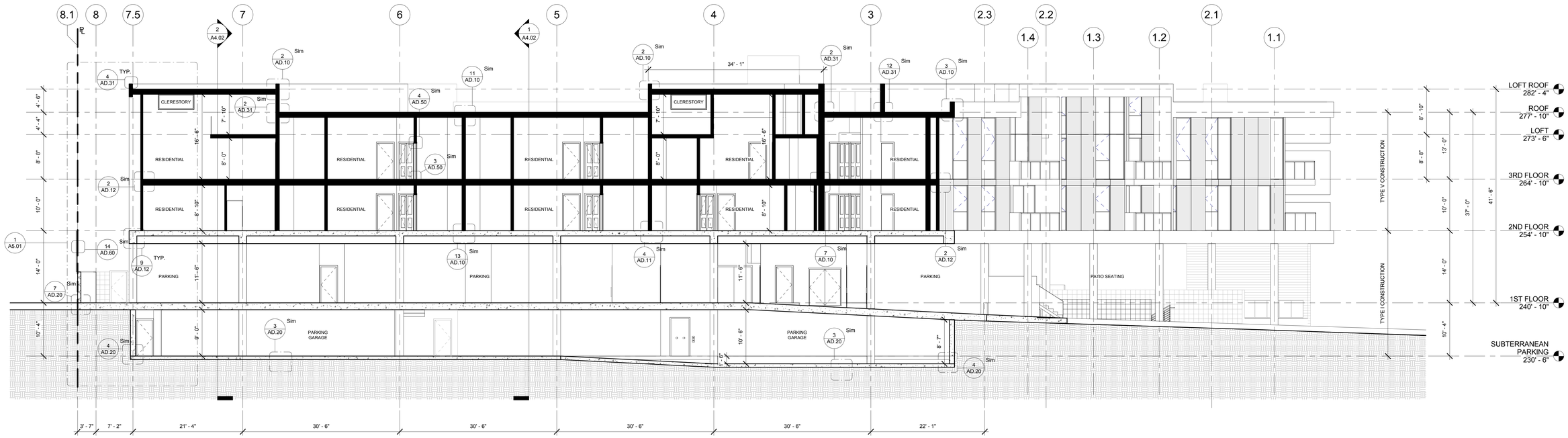

LONGITUDINAL SECTION A

SCALE: 1/8" = 1'-0"

1

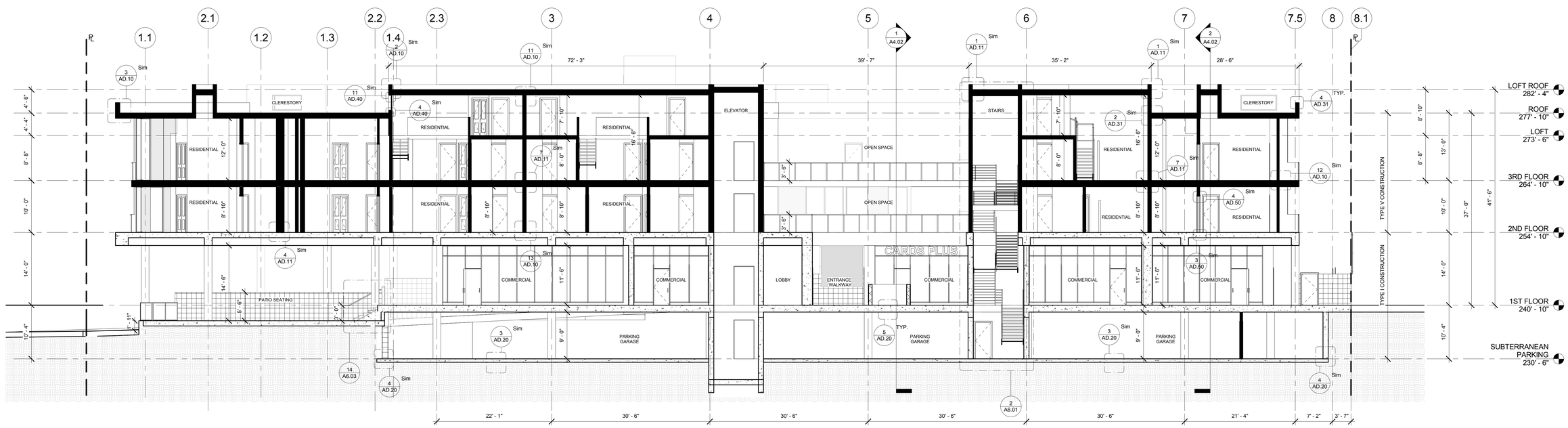

LONGITUDINAL SECTION B

SCALE: 1/8" = 1'-0"

2

THE ABOVE DRAWINGS AND SPECIFICATIONS AND DESIGNS SHOWN ARE THE PROPERTY OF THE ARCHITECT AND SHALL REMAIN THE PROPERTY OF THE ARCHITECT AND NO PART THEREOF SHALL BE CONVEYED OR DISCLOSED TO OTHERS OR USED IN CONNECTION WITH ANY OTHER WORK OR PROJECT OTHER THAN THE SPECIFIC PROJECT FOR WHICH THEY HAVE BEEN PREPARED AND DEVELOPED, WITHOUT THE WRITTEN CONSENT OF THE ARCHITECT. VISUAL CONTACT WITH THESE DRAWINGS AND SPECIFICATIONS SHALL CONSTITUTE CONCLUSIVE EVIDENCE OF ACCEPTANCE OF THESE RESTRICTIONS.

NO.	REVISIONS	DATE
01	PLAN CHECK REVISIONS	06/06/2016

LICENSED ARCHITECT
STEPHEN M. ALBERT
NO. C 9412
REN. 5-31-13
STATE OF CALIFORNIA

1833 N. GAREY AVE.

1833 NORTH GAREY AVENUE
PAMONA, CALIFORNIA 91767

BUILDING SECTIONS

the albert group architects
21032 Stoner Ave | Los Angeles, CA 90025 310.312.0123

C.U.P. NUMBER:

PROJECT NUMBER: 14130

PROJECT STATUS: PLAN CHECK RESUBMITTAL

ISSUE DATE: 07/18/2016

SHEET NUMBER: A4.01

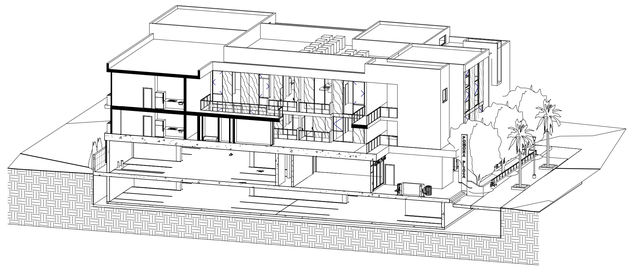

ISOMETRIC SECTION A

ISOMETRIC SECTION B

ELEVATION KEY NOTES

E1	SMOOTH FINISH CEMENT PLASTER, LA HABRA X-50 CRYSTAL WHITE OR APPROVED EQUAL
E2	SYNTHETIC WOOD COMPOSITE PANEL RAINSCREEN OVER SCRATCH COAT OF STUCCO PAINTED BLACK, TRESPA AMBER FINISH OR APPROVED EQUAL
E3	CURTAIN WALL SYSTEM: SOLARBAN 60 IGU WITH CLEAR ANNODIZED ALUMINUM FINISH WINDOW SYSTEM
E4	GLASS RAILING SYSTEM
E5	BOARD-FORMED CONCRETE
E6	STOREFRONT SIGN
E7	MONUMENT SIGN
E8	PYLON SIGN
E9	8" CMU WALL ORCO SPLIT FACED BLACK BLOCK, 6' - 0" ABOVE FINISHED GRADE
E11	EXPOSED CONCRETE COLUMN
E12	FIRE DEPARTMENT POINT OF CONNECTION
E13	LOCATION OF TRANSFORMER
E14	FREESTANDING WOODEN GREEN SCREEN
E15	STAIR AND/OR ELEVATOR OVERRUN
E16	WALL MOUNTED WOODEN GREEN SCREEN
E17	ALUMINIUM FIXED WINDOW PER SCHEDULE
E18	ALUMINIUM WINDOW PER SCHEDULE
E20	ALUMINIUM DOOR PER SCHEDULE
E21	ALUM. BREAK METAL, FINISH TO MATCH WINDOW WALL SYSTEM
E22	STUCCO PLASTER CONTROL JOINT

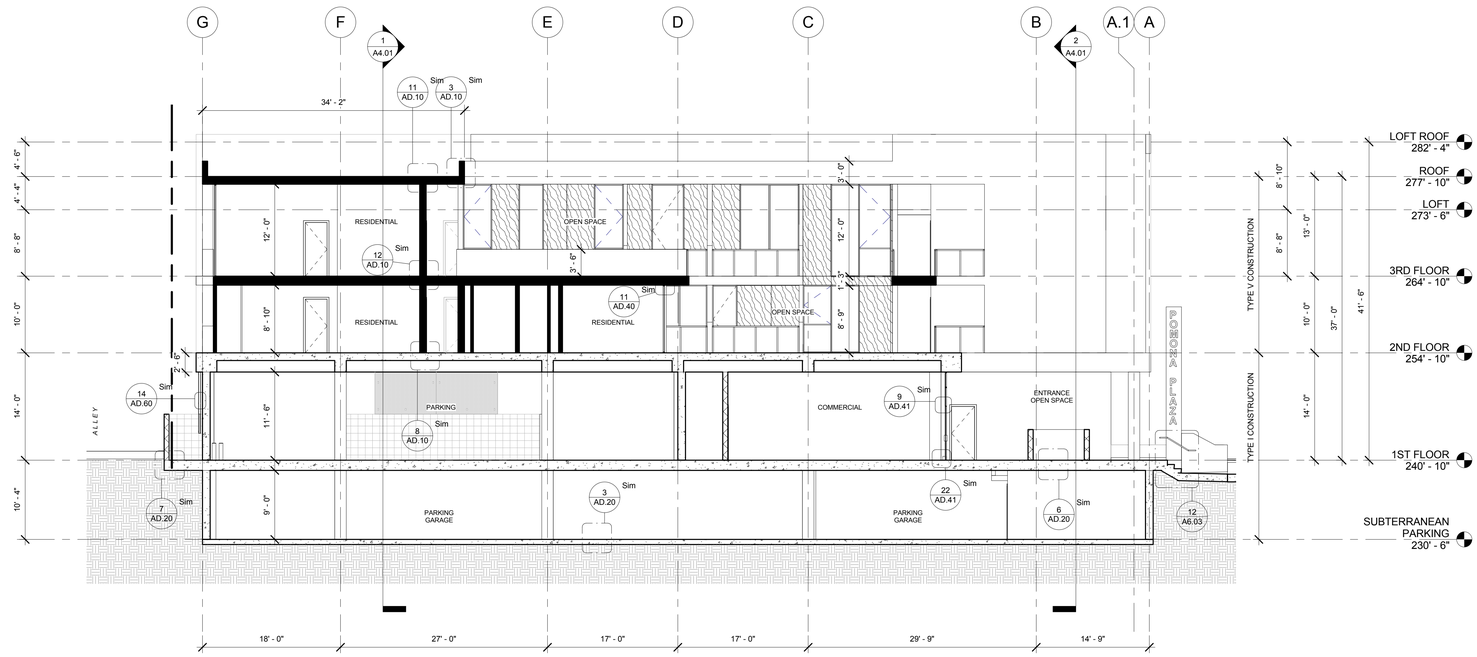

TRANSVERSE SECTION A

SCALE: 1/8" = 1'-0" | 1

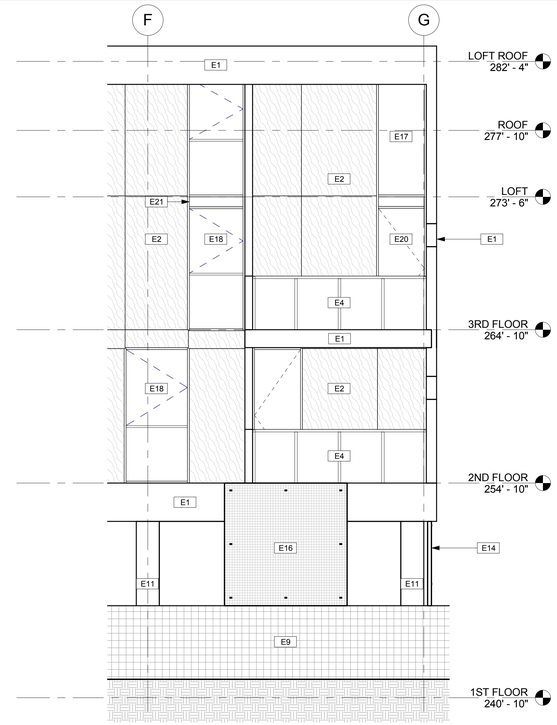

ELEVATION DETAIL I

SCALE: 1/4" = 1'-0" | 3

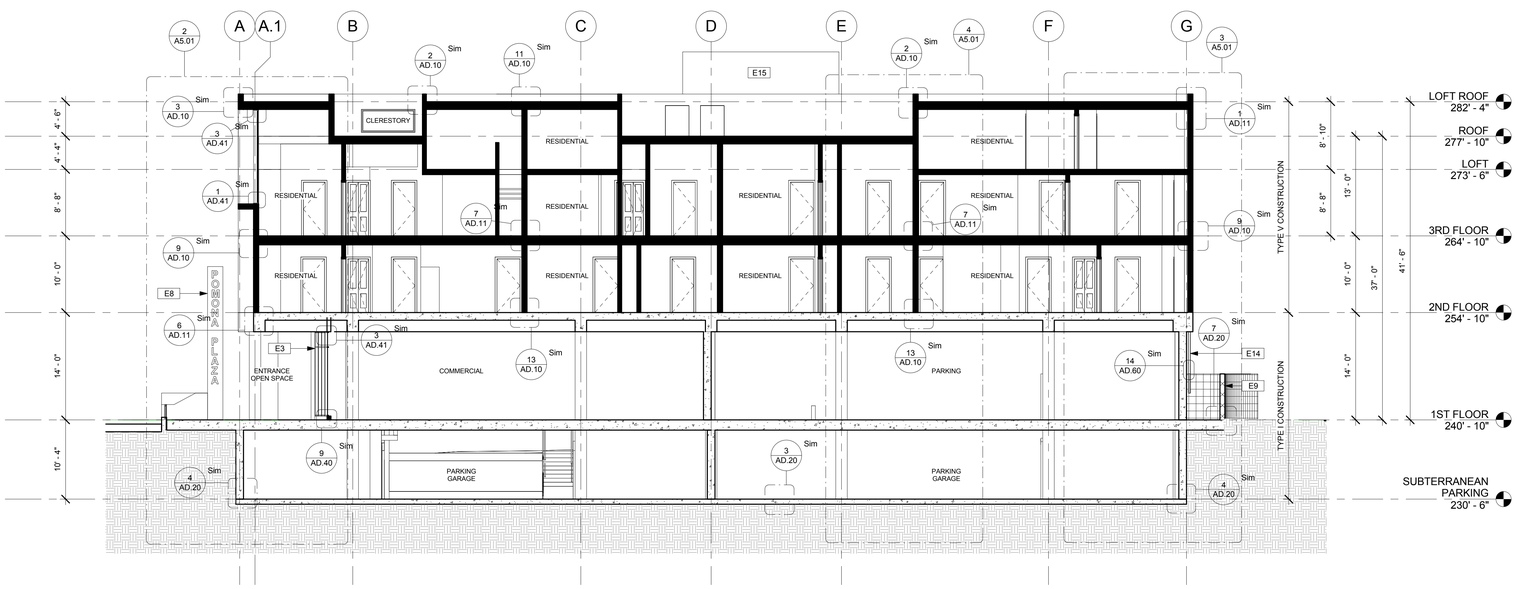

TRANSVERSE SECTION B

SCALE: 1/8" = 1'-0" | 2

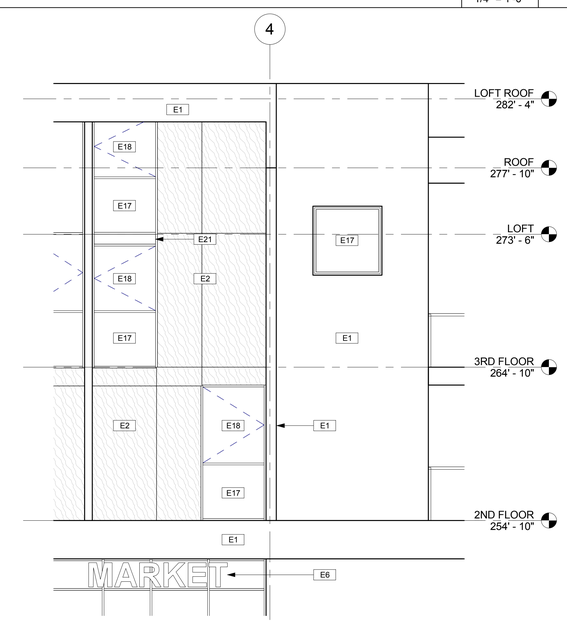

ELEVATION DETAIL II

SCALE: 1/4" = 1'-0" | 6

NO.	REVISIONS	DATE
01	PLAN CHECK REVISIONS	06/06/2016

THE ABOVE DRAWINGS AND SPECIFICATIONS AND REPRESENTATIONS HEREBY ARE AND SHALL REMAIN THE PROPERTY OF THE ARCHITECT AND NO PART THEREOF SHALL BE CONVEYED OR REPRODUCED OR USED IN CONNECTION WITH ANY OTHER WORK OR PROJECT OTHER THAN THE SPECIFIC PROJECT FOR WHICH THEY HAVE BEEN PREPARED AND DEVELOPED, WITHOUT THE WRITTEN CONSENT OF THE ARCHITECT. VISUAL CONTACT WITH THESE DRAWINGS AND SPECIFICATIONS SHALL CONSTITUTE CONCLUSIVE EVIDENCE OF ACCEPTANCE OF THESE RESTRICTIONS.

LICENSED ARCHITECT
STEPHEN M. ALBERT
NO. C 9412
REN. 5-31-13
STATE OF CALIFORNIA

1833 N. GAREY AVE.

1833 NORTH GAREY AVENUE
PAMONA, CALIFORNIA 91767

BUILDING SECTIONS

the albert group architects
2032 Stonar Ave | Los Angeles, CA 90025 310.925.5555

C.U.P NUMBER:

PROJECT NUMBER: 14130

PROJECT STATUS: PLAN CHECK RESUBMITTAL

ISSUE DATE: 07/18/2016

SHEET NUMBER: A4.02

WALL SECTION KEY NOTES

SW1	PLANTER
SW2	CONCRETE WALL
SW3	8" CMU WALL ORCO SPLIT FACED BLACK BLOCK, 6' - 0" ABOVE FINISHED GRADE
SW4	GLASS FIBER BATT INSULATION
SW5	ALUMINIUM FIXED WINDOW
SW8	STOREFRONT WINDOW SYSTEM
SW9	GLASS RAILING SYSTEM
SW12	EXPOSED CONCRETE SLAB
SW13	EXPOSED CONCRETE COLUMN
SW16	SMOOTH FINISH CEMENT PLASTER, LA HABRA X-50 CRYSTAL WHITE OR APPROVED EQUAL
SW17	SYNTHETIC WOOD COMPOSITE PANEL RAINSCREEN OVER SCRATCH COAT OF STUCCO PAINTED BLACK, TRESPA AMBER FINISH OR APPROVED EQUAL
SW19	FREESTANDING WOODEN GREEN SCREEN
SW21	CONCRETE FOUNDATION
SW22	EXPOSED CONCRETE SLAB PAINTED WHITE

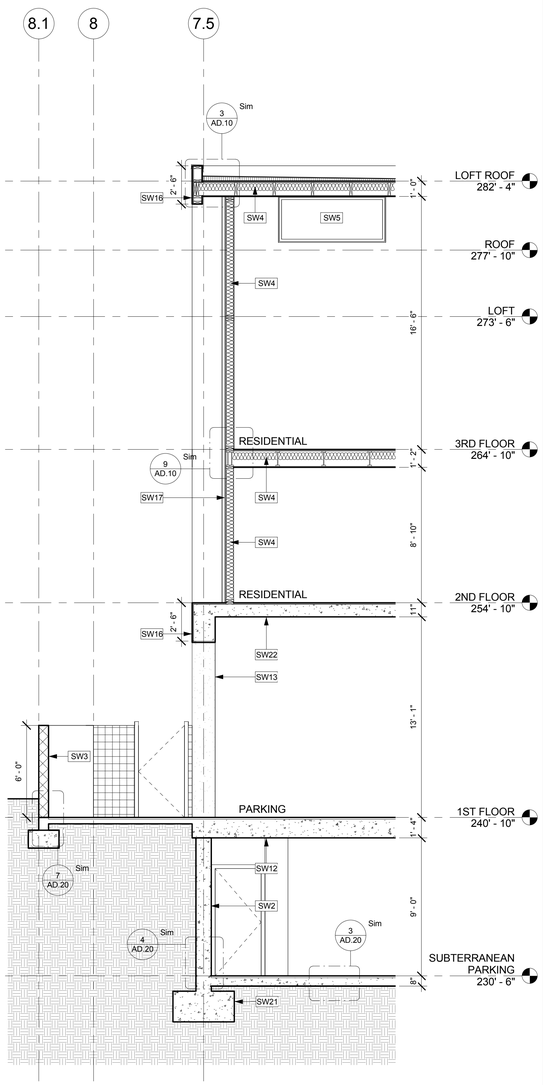

WALL SECTION A | SCALE: 1/4" = 1'-0" | 1

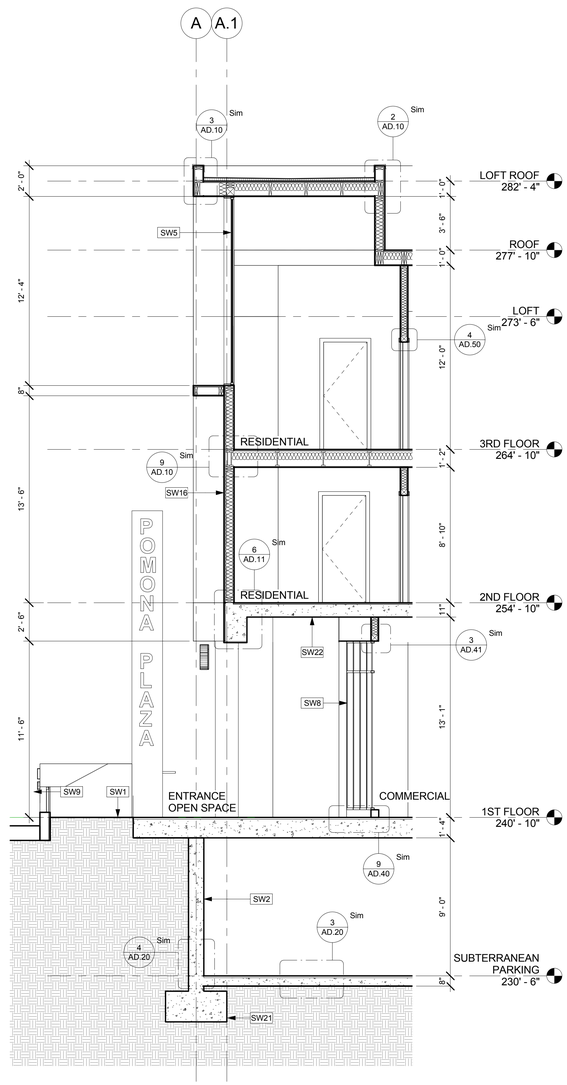

WALL SECTION B | SCALE: 1/4" = 1'-0" | 2

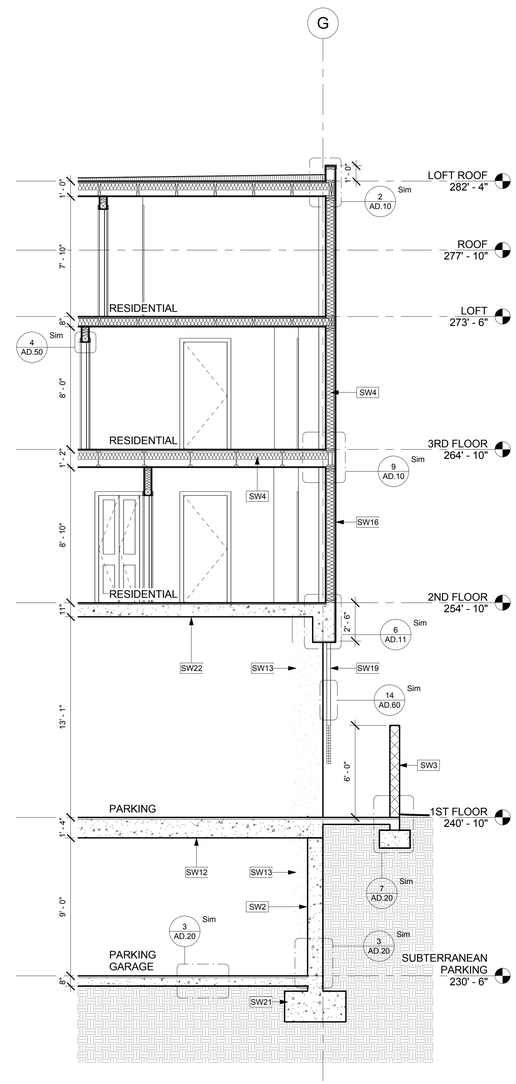

WALL SECTION C | SCALE: 1/4" = 1'-0" | 3

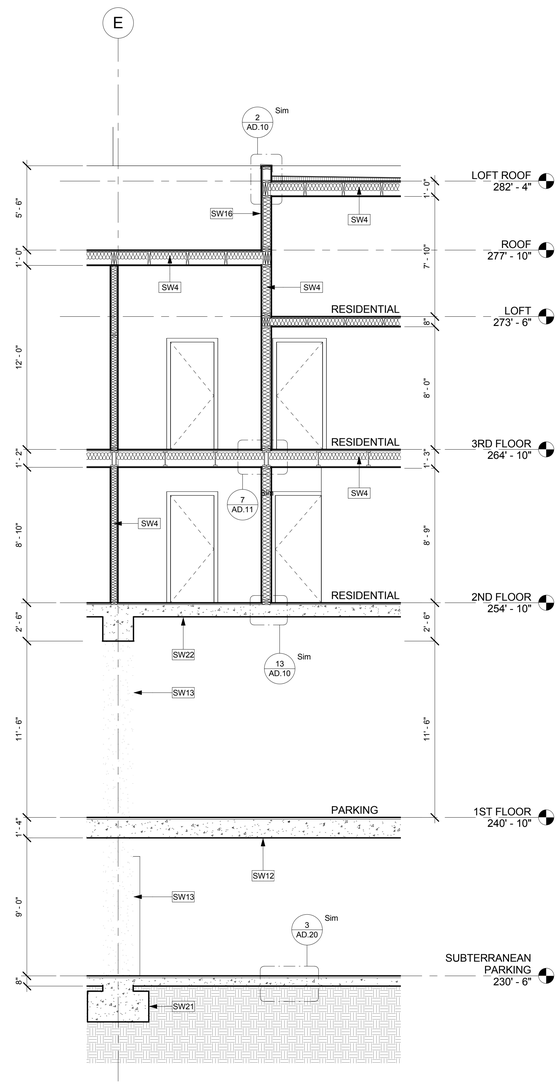

WALL SECTION D | SCALE: 1/4" = 1'-0" | 4

THE ABOVE DRAWINGS AND SPECIFICATIONS AND REPORTS PREPARED BY THE ARCHITECT AND REPRESENTED THEREBY ARE AND SHALL REMAIN THE PROPERTY OF THE ARCHITECT AND NO PART THEREOF SHALL BE COPIED, DISCLOSED TO OTHERS OR USED IN CONNECTION WITH ANY OTHER WORK OR PROJECT OTHER THAN THE SPECIFIC PROJECT FOR WHICH THEY HAVE BEEN PREPARED AND DEVELOPED, WITHOUT THE WRITTEN CONSENT OF THE ARCHITECT. VISUAL CONTACT WITH THESE DRAWINGS OR SPECIFICATIONS SHALL CONSTITUTE CONCLUSIVE EVIDENCE OF ACCEPTANCE OF THESE RESTRICTIONS.

NO.	REVISIONS	DATE
01	PLAN CHECK REVISIONS	06/06/2016

LICENSED ARCHITECT
STEPHEN M. ALBERT
NO. C 9412
REN. 5-31-13
STATE OF CALIFORNIA

1833 N. GAREY AVE.

1833 NORTH GAREY AVENUE
PAMONA, CALIFORNIA 91767

WALL SECTIONS

the albert group architects
2032 Stoner Ave | Los Angeles, CA 90025 310.312.0555

C.U.P NUMBER:

PROJECT NUMBER: 14130

PROJECT STATUS: PLAN CHECK RESUBMITTAL

ISSUE DATE: 07/18/2016

SHEET NUMBER: A5.01

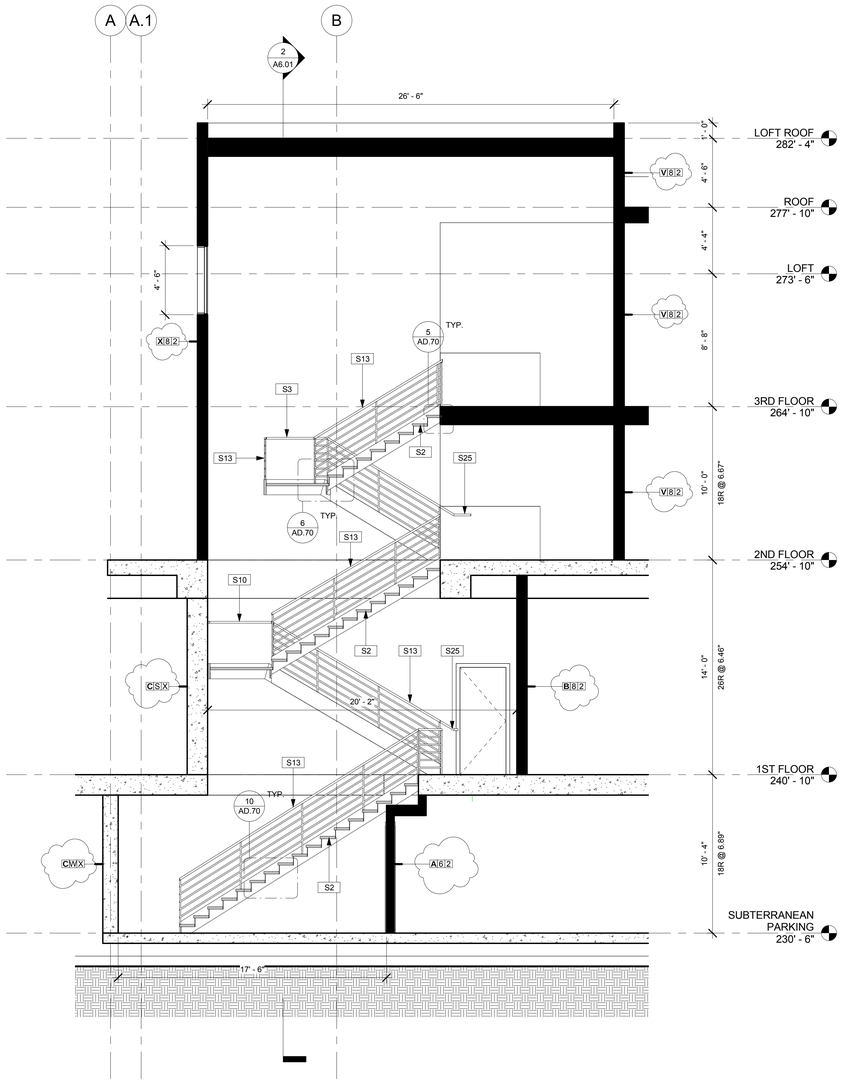

STAIR 1 SECTION A | SCALE: 1/4" = 1'-0" | 1

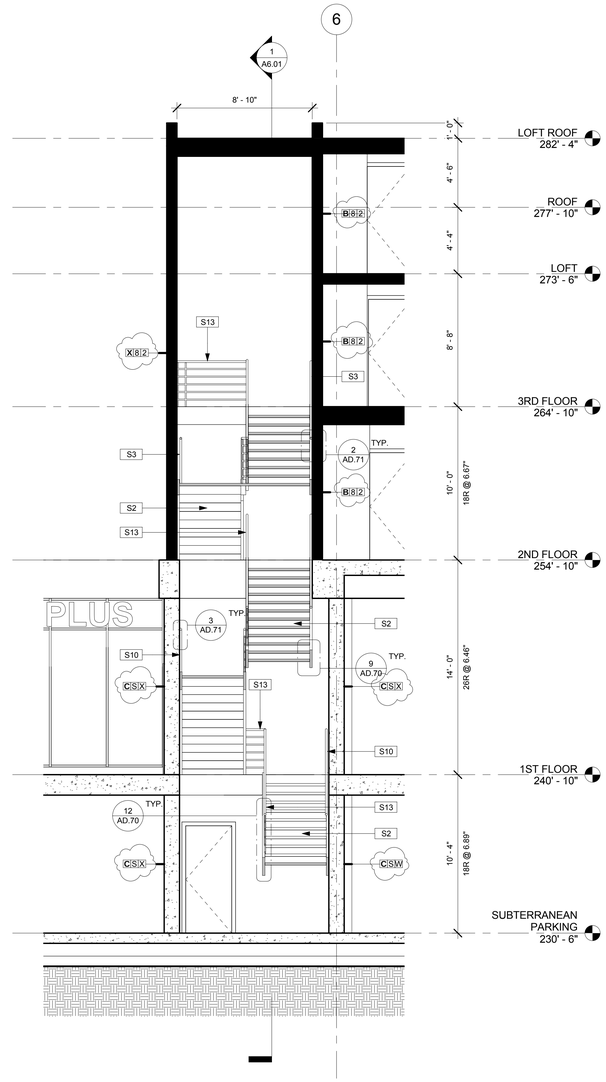

STAIR 1 SECTION B | SCALE: 1/4" = 1'-0" | 2

STAIR KEY NOTES

S2	STEEL STAIR WITH CONCRETE PAN FILLED TREADS. SEE DETAIL 6/AD.70
S3	WALL MOUNTED HANDRAIL @ WOOD FRAMING - TYP., SEE DETAIL 8/AD.71
S4	42" HANDRAIL - TYP., SEE DETAIL 3/AD.71
S6	5' X 5' LANDING APPROACH
S7	TREAD STRIPING - TYP., SEE GENERAL NOTES
S10	CONCRETE WALL MOUNTED HANDRAIL, SEE DETAIL 5/AD.71
S12	CONCRETE STAIRS, SEE DETAILS 1-3/AD.70
S13	42" GUARDRAIL WITH HANDRAIL, SEE 12/AD.70
S14	FLOOR LANDING NUMBER, MOUNTED ON BOTH SIDES OF JAMB, 60" A.F.F. TO C.L.
S15	ELEVATOR HALL LANTERN AND CALL BUTTONS. SEE 1/HC.6 FOR PANEL HEIGHTS, OPENING LOCATIONS, ETC.
S16	ELEVATOR CONTROL PANEL
S17	8" CMU WALL ORCO BLACK BLOCK
S20	POSITION INDICATOR OVER DOOR
S25	HANDRAIL EXTENSION @ STAIR BASE, SEE 7/AD.70
S27	CONCRETE RAMP, SEE STRUCTURAL DRAWINGS
S30	42" GLASS GUARDRAIL, SEE 1/AD.71
S31	ELEVATOR SLIDING DOORS TO BE 90 MIN RATED, TYPICAL @ ALL ELEVATOR SHAFTWAY OPENINGS.
S33	RIGID FOAM

STAIR GENERAL NOTES

A. ALL EXTERIOR WALLS TO BE X 61 U.O.N. EXCEPT WHEN NOTED.
B. ALL INTERIOR WALLS TO BE X 40 U.O.N. EXCEPT WHEN NOTED.
C. MAXIMUM OF 7" RISE AND A MINIMUM OF 11" RUN FOR ALL EGRESS/COMMON STAIRS. MAXIMUM OF 7-3/4" RISE AND 10" RUN FOR ALL RESIDENTIAL STAIRS WITHIN PRIVATE UNITS. REFER TO DRAWINGS FOR SPECIFIC DIMENSIONS.
D. WIDTH OF EGRESS/COMMON STAIRS TO BE A MINIMUM OF 44" CLEAR BETWEEN STRINGERS. WIDTH OF RESIDENTIAL STAIRS TO BE A MINIMUM OF 36" CLEAR BETWEEN STRINGERS.
E. TREAD STRIPING TO BE LOCATED ON ALL EXTERIOR STAIRS AND ON THE UPPER APPROACH AND LOWER TREAD FOR ALL INTERIOR STAIRS, BUT NOT INCLUDING PRIVATE RESIDENTIAL UNIT STAIRS. CONTRASTING STRIPE TO BE 2" x TREAD WIDTH AND PLACED 1" FROM THE NOSE.
F. ALL GUARDRAILS TO BE A MINIMUM OF 42" HIGH. OPENINGS IN THE GUARDRAILS SHALL BE LESS THAN 4" LESS THAN OR EQUAL TO 34" HIGH, SO THAT NO 4" SPHERE MAY PASS THROUGH, NOR LESS THAN 8" OPENINGS ABOVE 34" HIGH.
G. HANDRAILS TO BE LOCATED 34"-36" ABOVE THE TREAD NOSING WITH 1-1/2" CLEAR TO WALL OR GUARDRAIL. HANDRAILS TO BE 1-1/4" TO 1-1/2"ø IN CROSS SECTION, ENDS EITHER RETURN TO WALL OR TERMINATE AT POST. REFER TO DETAILS FOR INDIVIDUAL CONDITIONS.
H. HANDRAIL AND GUARDRAIL CONNECTION DETAILS TO BE ADEQUATE TO WITHSTAND A 200 POUND CONCENTRATED LOAD AT A RIGHT ANGLE TO THE TOP RAIL.
I. ALL HANDRAILS TO EXTEND IN THE DIRECTION OF TRAVEL A MINIMUM OF 12" AT TOP LANDING AND TREAD WIDTH + 12" AT BOTTOM LANDING. REFER TO DRAWINGS.
J. ALL STAIRWAYS SHALL HAVE AN ILLUMINATION LEVEL ON TREAD RUNS OF NOT LESS THAN 1 FOOT-CANDLE (11LUX)
K. ALL STAIR TREADS TO BE POLISHED WITH NON-SKID SEALANT, U.O.N.
L. LOBBY & EXTERIOR COURTYARD STAIRS TO HAVE STAINLESS STEEL HANDRAILS. ALL OTHER STAIRS TO HAVE GALVANIZED HANDRAILS, U.O.N.
M. ELEVATOR TO BE FULL ACCESSABLE AND ADA COMPLIANT. SEE 1/ACC5 FOR PANEL HEIGHTS, OPENING LOCATIONS, ETC.
N. IN RESIDENTIAL UNITS, PER 1013.3, EXCEPTION 2, GUARDRAIL/HANDRAIL COMBINATION TO BE A MINIMUM OF 34" AND A MAXIMUM OF 38" HIGH, AND SHALL NOT HAVE OPENINGS BETWEEN CABLES AND/OR PIPE.
O. ELEVATORS SHALL COMPLY WITH SECTION 1124A, CAR SIZE 1124A.3.2, DOOR SIZE 1124A.3.2.1 AND ASME A17.1, TITLE 8 CA. CODE OF REGULATIONS.

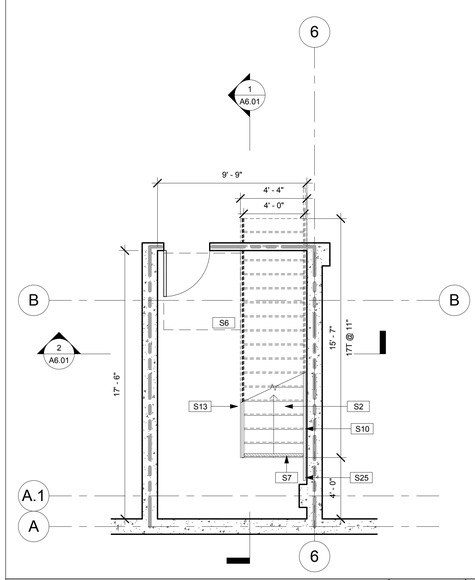

STAIR 1 - SUBTERRANEAN PARKING | SCALE: 1/4" = 1'-0" | 3

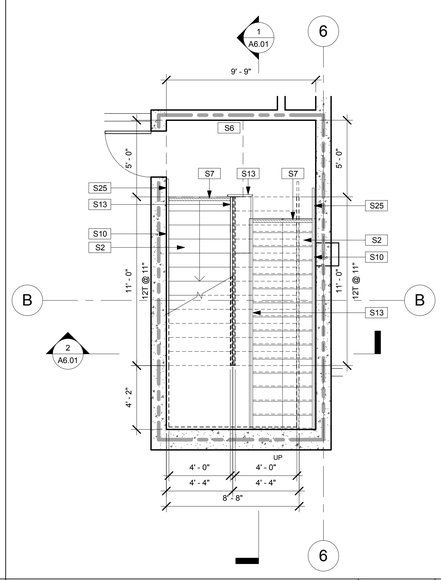

STAIR 1 - 1ST FLOOR | SCALE: 1/4" = 1'-0" | 4

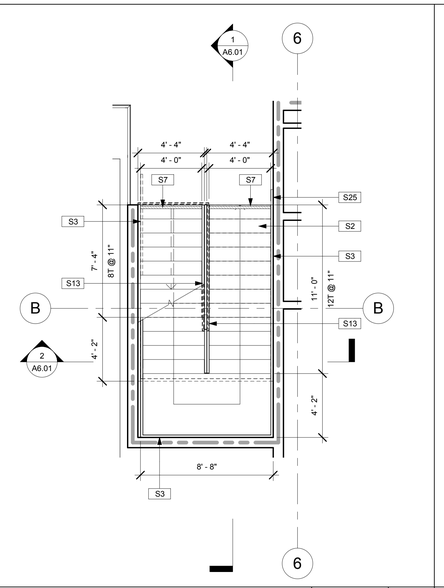

STAIR 1 - 2ND FLOOR | SCALE: 1/4" = 1'-0" | 5

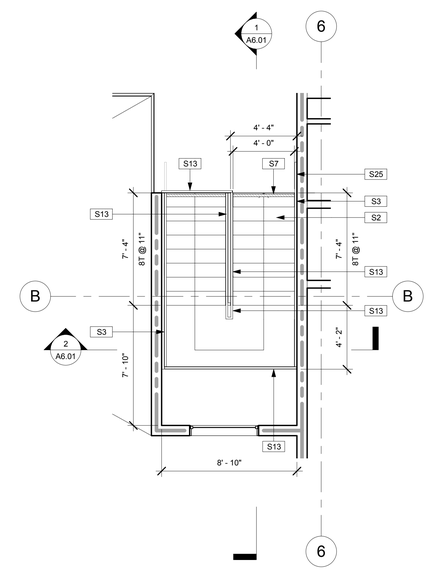

STAIR 1 - 3RD FLOOR | SCALE: 1/4" = 1'-0" | 6

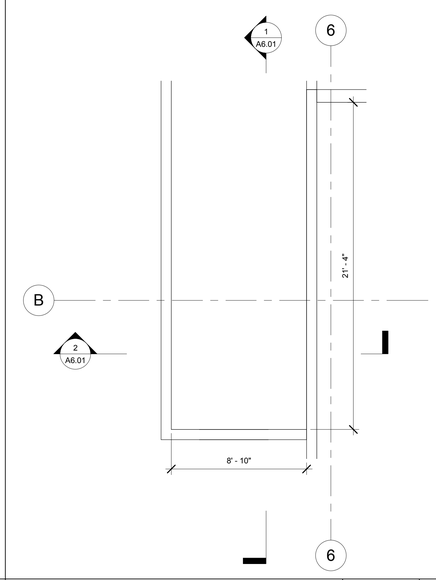

STAIR 1 - ROOF | SCALE: 1/4" = 1'-0" | 7

NO.	REVISIONS	DATE
01	PLAN CHECK REVISIONS	06/06/2016

THE ABOVE DRAWINGS AND SPECIFICATIONS AND REPRESENTATIONS HEREIN SHALL REMAIN THE PROPERTY OF THE ARCHITECT AND NO PART OF THE DESIGN SHALL BE USED FOR OTHER OR USED IN CONNECTION WITH ANY OTHER WORK OR PROJECT OTHER THAN THE SPECIFIC PROJECT FOR WHICH THEY HAVE BEEN PREPARED AND DEVELOPED, WITHOUT THE WRITTEN CONSENT OF THE ARCHITECT. VISUAL CONTACT WITH THESE DRAWINGS AND SPECIFICATIONS SHALL CONSTITUTE CONCLUSIVE EVIDENCE OF ACCEPTANCE OF THESE RESTRICTIONS.

LICENSED ARCHITECT
STEPHEN M. ALBERT
NO. C 9412
REN. 5-31-13
STATE OF CALIFORNIA

1833 N. GAREY AVE.

1833 NORTH GAREY AVENUE
PAMONA, CALIFORNIA 91767

EBLARGED STAIR PLANS AND SECTIONS

the albert group architects
2032 Stoner Ave | Los Angeles, CA 90025 310.828.2083

C.U.P NUMBER:

PROJECT NUMBER: **14130**

PROJECT STATUS: **PLAN CHECK RESUBMITTAL**

ISSUE DATE: **07/18/2016**

SHEET NUMBER: **A6.01**

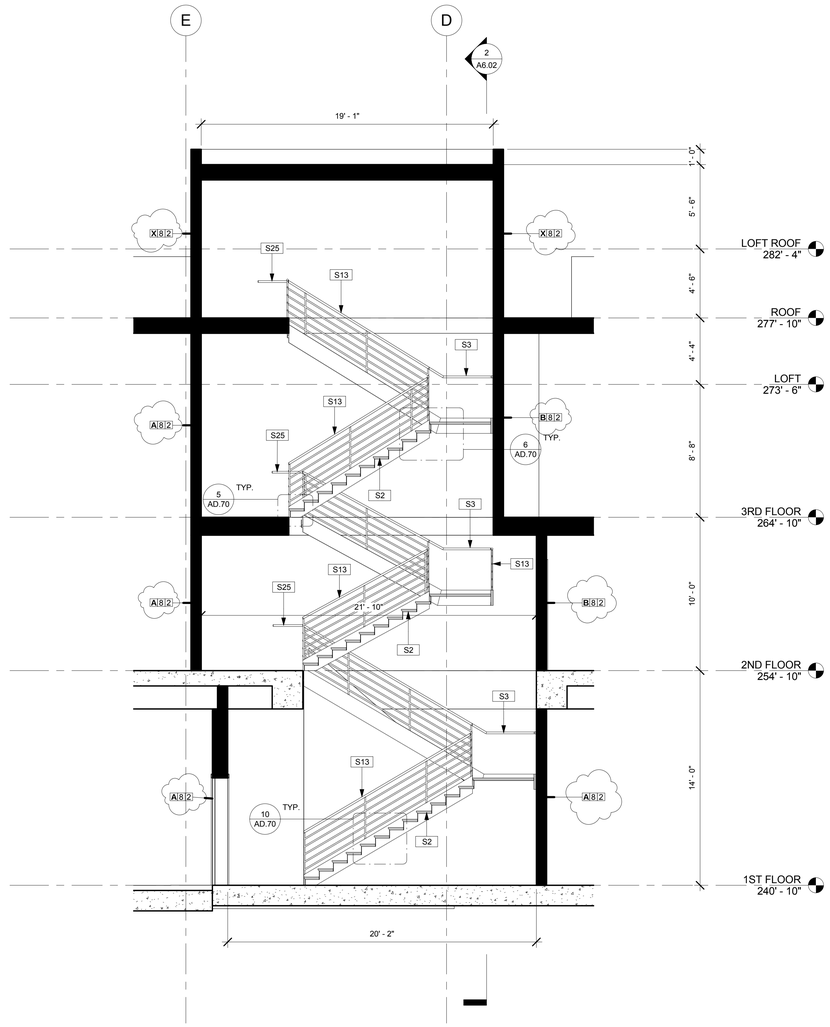

STAIR 2 SECTION A

SCALE: 1/4" = 1'-0" | 1

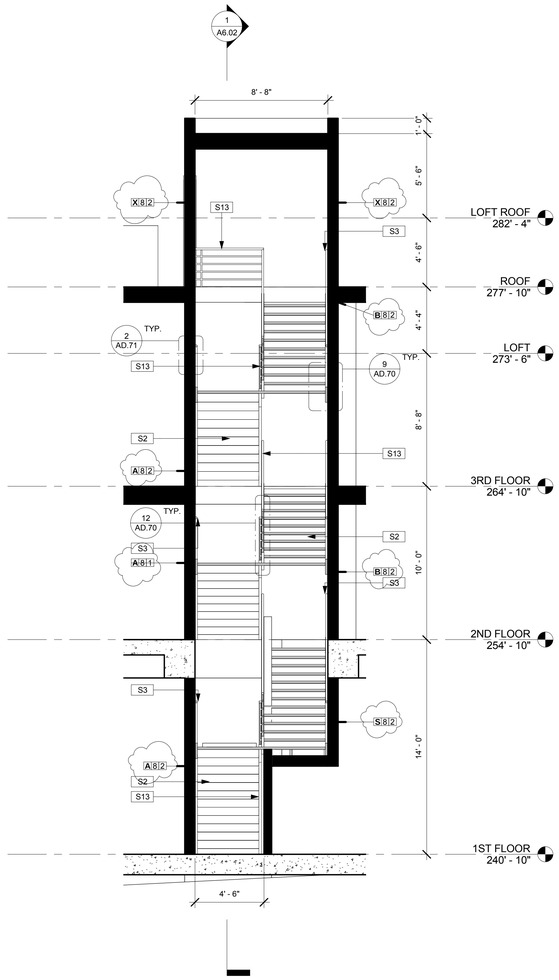

STAIR 2 SECTION B

SCALE: 1/4" = 1'-0" | 2

STAIR KEY NOTES

S2	STEEL STAIR WITH CONCRETE PAN FILLED TREADS. SEE DETAIL 6/AD.70
S3	WALL MOUNTED HANDRAIL @ WOOD FRAMING - TYP., SEE DETAIL 8/AD.71
S4	42" HANDRAIL - TYP., SEE DETAIL 3/AD.71
S6	5' X 5' LANDING APPROACH
S7	TREAD STRIPING - TYP., SEE GENERAL NOTES
S10	CONCRETE WALL MOUNTED HANDRAIL, SEE DETAIL 5/AD.71
S12	CONCRETE STAIRS, SEE DETAILS 1-3/AD.70
S13	42" GUARDRAIL WITH HANDRAIL, SEE 12/AD.70
S14	FLOOR LANDING NUMBER, MOUNTED ON BOTH SIDES OF JAMB, 60" A.F.F. TO C.L.
S15	ELEVATOR HALL LANTERN AND CALL BUTTONS: SEE 1/HC.6 FOR PANEL HEIGHTS, OPENING LOCATIONS, ETC.
S16	ELEVATOR CONTROL PANEL
S17	8" CMU WALL ORCO BLACK BLOCK
S20	POSITION INDICATOR OVER DOOR
S25	HANDRAIL EXTENSION @ STAIR BASE, SEE 7/AD.70
S27	CONCRETE RAMP, SEE STRUCTURAL DRAWINGS
S30	42" GLASS GUARDRAIL, SEE 1/AD.71
S31	ELEVATOR SLIDING DOORS TO BE 90 MIN RATED, TYPICAL @ ALL ELEVATOR SHAFTWAY OPENINGS.
S33	RIGID FOAM

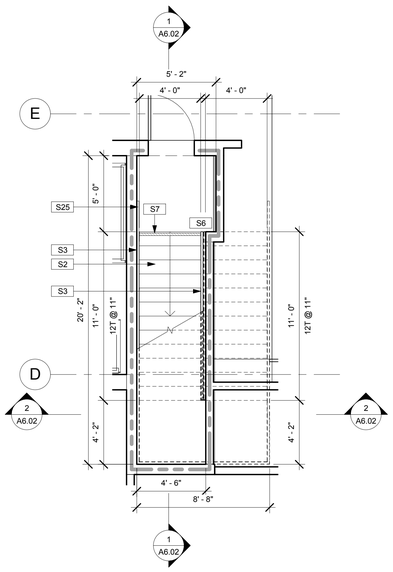

STAIR 2 - 1ST FLOOR

SCALE: 1/4" = 1'-0" | 3

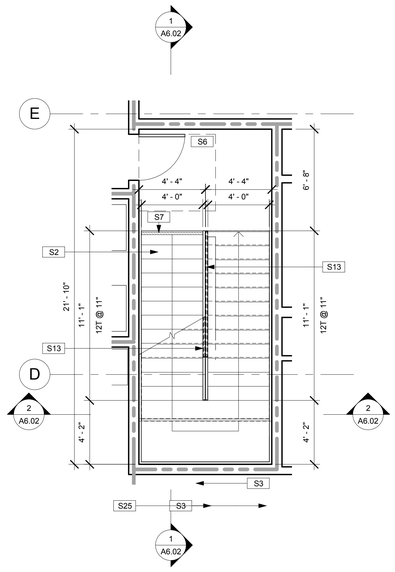

STAIR 2 - 2ND FLOOR

SCALE: 1/4" = 1'-0" | 4

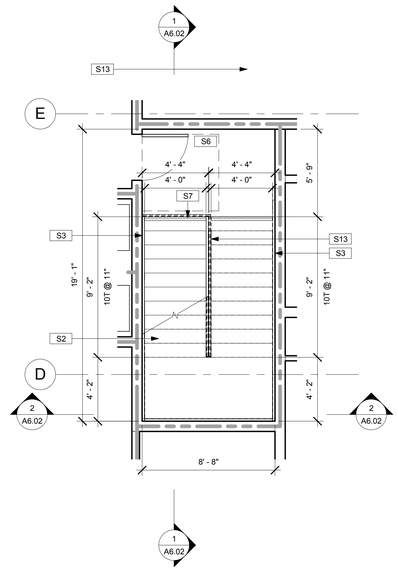

STAIR 2 - 3RD FLOOR

SCALE: 1/4" = 1'-0" | 5

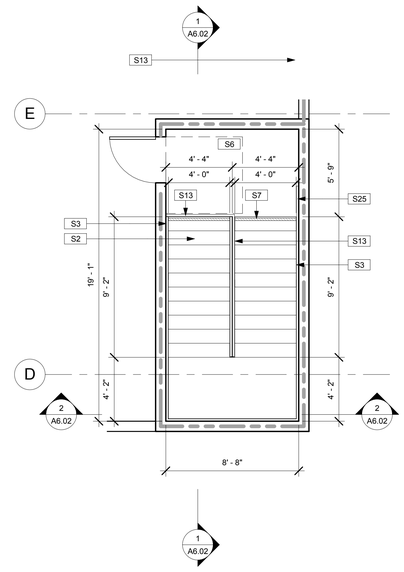

STAIR 2 - LOFT

SCALE: 1/4" = 1'-0" | 6

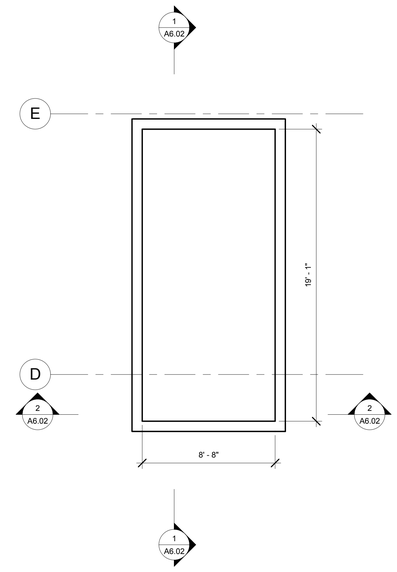

STAIR 2 - ROOF

SCALE: 1/4" = 1'-0" | 7

THE ABOVE DRAWINGS AND SPECIFICATIONS AND REPORTS PREPARED BY THE ARCHITECT AND REPRESENTED THEREBY ARE AND SHALL REMAIN THE PROPERTY OF THE ARCHITECT AND NO PART THEREOF SHALL BE MADE PUBLIC OR PRIVATE OR USED IN CONNECTION WITH ANY OTHER WORK OR PROJECT OTHER THAN THE SPECIFIC PROJECT FOR WHICH THEY HAVE BEEN PREPARED AND DEVELOPED, WITHOUT THE WRITTEN CONSENT OF THE ARCHITECT. VISUAL CONTACT WITH THESE DRAWINGS OR SPECIFICATIONS SHALL CONSTITUTE CONCLUSIVE EVIDENCE OF ACCEPTANCE OF THESE RESTRICTIONS.

NO.	REVISIONS	DATE
01	PLAN CHECK REVISIONS	06/06/2016

LICENSED ARCHITECT
STEPHEN M. ALBERT
NO. C 9412
REN. 5-31-13
STATE OF CALIFORNIA

1833 N. GAREY AVE.

1833 NORTH GAREY AVENUE
PAMONA, CALIFORNIA 91767

ENLARGED STAIR PLANS AND SECTIONS

the albert group architects
2062 Sunset Ave | Los Angeles, CA 90025 310.922.9555

C.U.P NUMBER:

PROJECT NUMBER: 14130

PROJECT STATUS: PLAN CHECK RESUBMITTAL

ISSUE DATE: 07/18/2016

SHEET NUMBER: A6.02

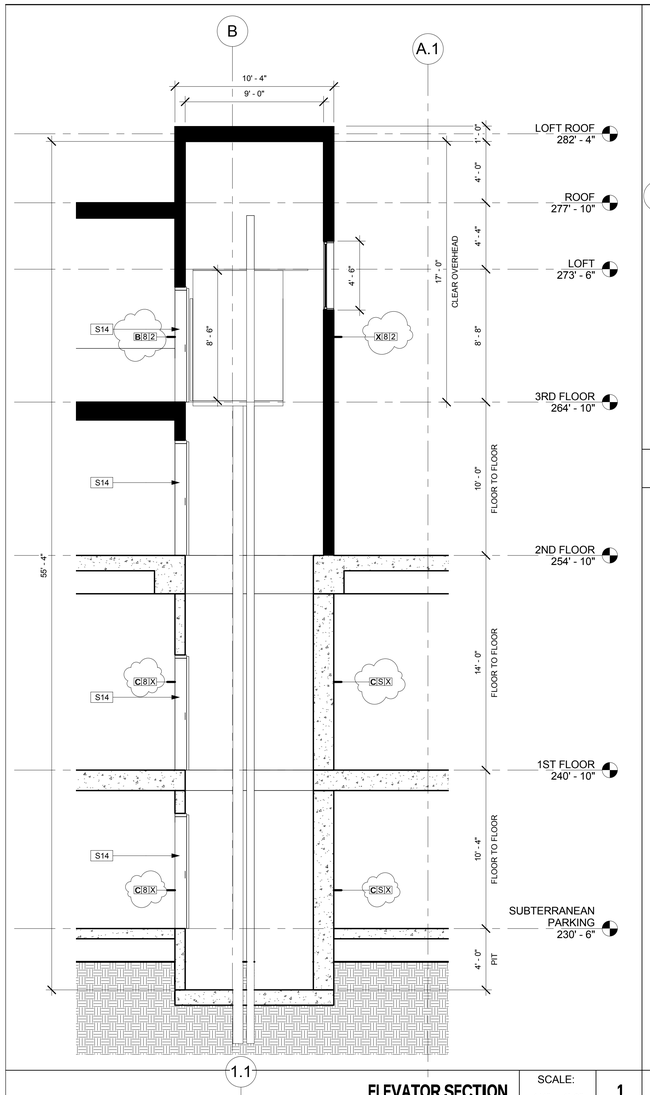

ELEVATOR SECTION | SCALE: 1/4" = 1'-0" | 1

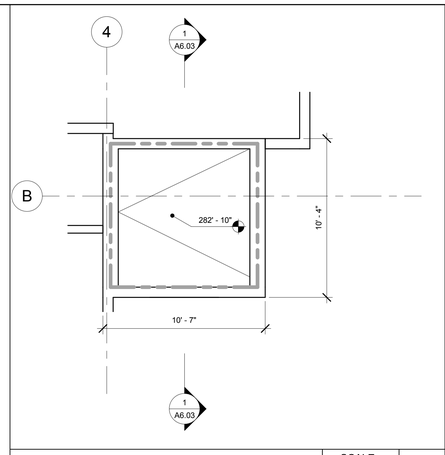

ELEVATOR - ROOF | SCALE: 1/4" = 1'-0" | 5

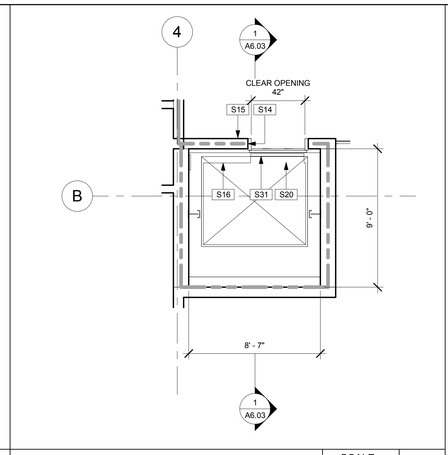

ELEVATOR - 2ND & 3RD FLOOR | SCALE: 1/4" = 1'-0" | 4

STAIR GENERAL NOTES

A. ALL EXTERIOR WALLS TO BE X 61 U.O.N. EXCEPT WHEN NOTED.
B. ALL INTERIOR WALLS TO BE X 40 U.O.N. EXCEPT WHEN NOTED.
C. MAXIMUM OF 7" RISE AND A MINIMUM OF 11" RUN FOR ALL EGRESS/COMMON STAIRS. MAXIMUM OF 7-3/4" RISE AND 10" RUN FOR ALL RESIDENTIAL STAIRS WITHIN PRIVATE UNITS. REFER TO DRAWINGS FOR SPECIFIC DIMENSIONS.
D. WIDTH OF EGRESS/COMMON STAIRS TO BE A MINIMUM OF 44" CLEAR BETWEEN STRINGERS. WIDTH OF RESIDENTIAL STAIRS TO BE A MINIMUM OF 36" CLEAR BETWEEN STRINGERS.
E. TREAD STRIPING TO BE LOCATED ON ALL EXTERIOR STAIRS AND ON THE UPPER APPROACH AND LOWER TREAD FOR ALL INTERIOR STAIRS, BUT NOT INCLUDING PRIVATE RESIDENTIAL UNIT STAIRS. CONTRASTING STRIPE TO BE 2" x TREAD WIDTH AND PLACED 1" FROM THE NOSE.
F. ALL GUARDRAILS TO BE A MINIMUM OF 42" HIGH. OPENINGS IN THE GUARDRAILS SHALL BE LESS THAN 4" LESS THAN OR EQUAL TO 34" HIGH, SO THAT NO 4" SPHERE MAY PASS THROUGH, NOR LESS THAN 8" OPENINGS ABOVE 34" HIGH.
G. HANDRAILS TO BE LOCATED 34"-36" ABOVE THE TREAD NOSING WITH 1-1/2" CLEAR TO WALL OR GUARDRAIL. HANDRAILS TO BE 1-1/4" TO 1-1/2"ø IN CROSS SECTION, ENDS EITHER RETURN TO WALL OR TERMINATE AT POST. REFER TO DETAILS FOR INDIVIDUAL CONDITIONS.
H. HANDRAIL AND GUARDRAIL CONNECTION DETAILS TO BE ADEQUATE TO WITHSTAND A 200 POUND CONCENTRATED LOAD AT A RIGHT ANGLE TO THE TOP RAIL.
I. ALL HANDRAILS TO EXTEND IN THE DIRECTION OF TRAVEL A MINIMUM OF 12" AT TOP LANDING AND TREAD WIDTH + 12" AT BOTTOM LANDING, REFER TO DRAWINGS.
J. ALL STAIRWAYS SHALL HAVE AN ILLUMINATION LEVEL ON TREAD RUNS OF NOT LESS THAN 1 FOOT-CANDLE (11LUX)
K. ALL STAIR TREADS TO BE POLISHED WITH NON-SKID SEALANT, U.O.N.
L. LOBBY & EXTERIOR COURTYARD STAIRS TO HAVE STAINLESS STEEL HANDRAILS. ALL OTHER STAIRS TO HAVE GALVANIZED HANDRAILS, U.O.N.
M. ELEVATOR TO BE FULL ACCESSABLE AND ADA COMPLIANT. SEE 1/ACC5 FOR PANEL HEIGHTS, OPENING LOCATIONS, ETC.
N. IN RESIDENTIAL UNITS, PER 1013.3, EXCEPTION 2, GUARDRAIL/HANDRAIL COMBINATION TO BE A MINIMUM OF 34" AND A MAXIMUM OF 38" HIGH, AND SHALL NOT HAVE OPENINGS BETWEEN CABLES AND/OR PIPE
O. ELEVATORS SHALL COMPLY WITH SECTION 1124A, CAR SIZE 1124A.3.2, DOOR SIZE 1124A.3.2.1 AND ASME A17.1, TITLE 8 CA. CODE OF REGULATIONS.

STAIR KEY NOTES

S2	STEEL STAIR WITH CONCRETE PAN FILLED TREADS. SEE DETAIL 6/AD.70
S3	WALL MOUNTED HANDRAIL @ WOOD FRAMING - TYP., SEE DETAIL 8/AD.71
S4	42" HANDRAIL - TYP., SEE DETAIL 3/AD.71
S6	5' X 5' LANDING APPROACH
S7	TREAD STRIPING - TYP., SEE GENERAL NOTES
S10	CONCRETE WALL MOUNTED HANDRAIL, SEE DETAIL 5/AD.71
S12	CONCRETE STAIRS, SEE DETAILS 1-3/AD.70
S13	42" GUARDRAIL WITH HANDRAIL, SEE 12/AD.70
S14	FLOOR LANDING NUMBER, MOUNTED ON BOTH SIDES OF JAMB, 60" A.F.F. TO C.L.
S15	ELEVATOR HALL LANTERN AND CALL BUTTONS. SEE 1/HC.6 FOR PANEL HEIGHTS, OPENING LOCATIONS, ETC.
S16	ELEVATOR CONTROL PANEL
S17	8" CMU WALL ORCO BLACK BLOCK
S20	POSITION INDICATOR OVER DOOR
S25	HANDRAIL EXTENSION @ STAIR BASE, SEE 7/AD.70
S27	CONCRETE RAMP, SEE STRUCTURAL DRAWINGS
S30	42" GLASS GUARDRAIL, SEE 1/AD.71
S31	ELEVATOR SLIDING DOORS TO BE 90 MIN RATED, TYPICAL @ ALL ELEVATOR SHAFTWAY OPENINGS.
S33	RIGID FOAM

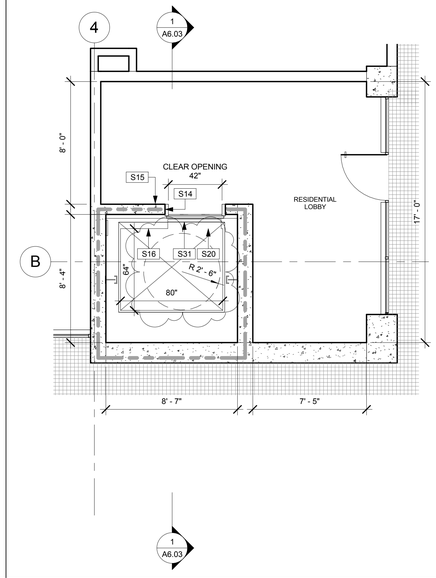

ELEVATOR - 1ST FLOOR | SCALE: 1/4" = 1'-0" | 3

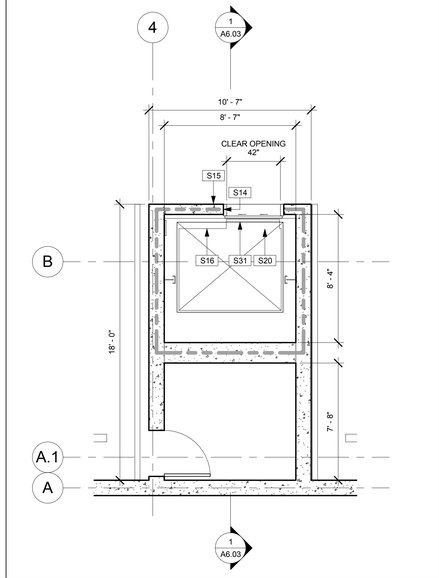

ELEVATOR - SUBTERRANEAN PARKING | SCALE: 1/4" = 1'-0" | 2

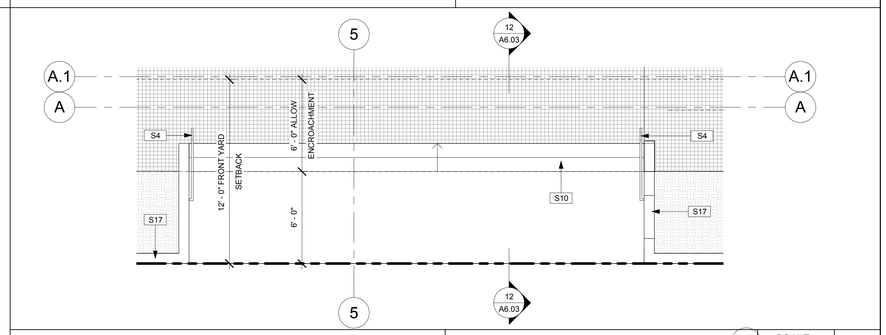

STAIR 3 - 1ST FLOOR | SCALE: 1/4" = 1'-0" | 13

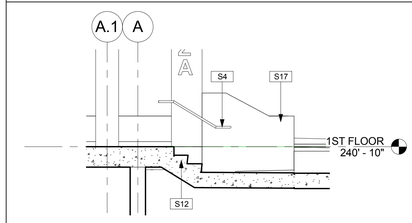

STAIR 3 - SECTION | SCALE: 1/4" = 1'-0" | 12

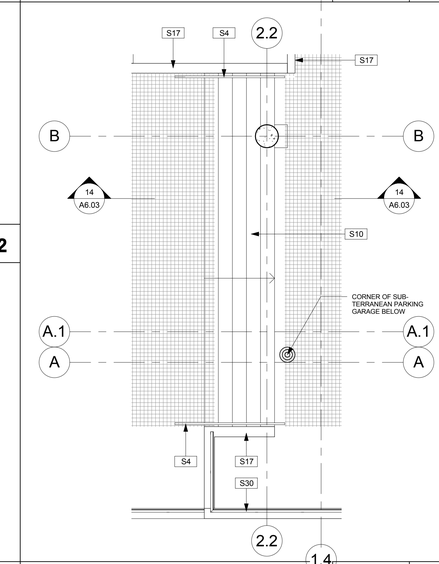

STAIR 4 - 1ST FLOOR | SCALE: 1/4" = 1'-0" | 15

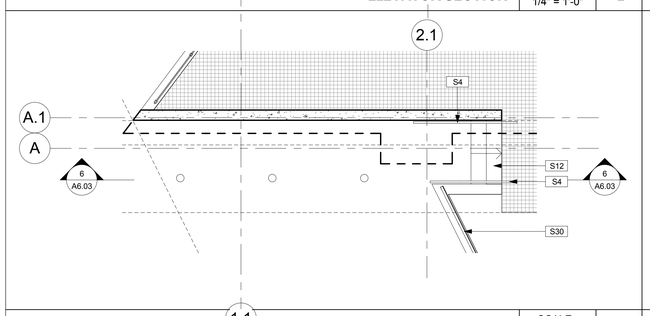

STAIR 5 - 1ST FLOOR | SCALE: 1/4" = 1'-0" | 7

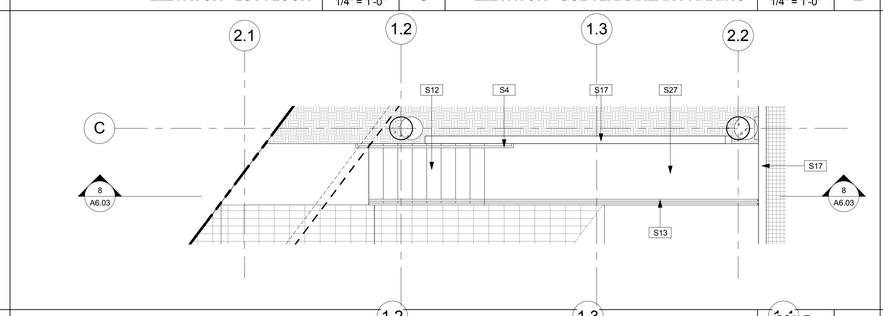

STAIR 6 - 1ST FLOOR | SCALE: 1/4" = 1'-0" | 9

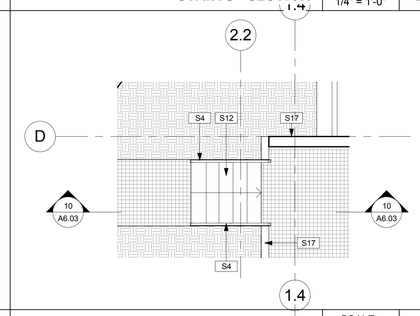

STAIR 7 - 1ST FLOOR | SCALE: 1/4" = 1'-0" | 11

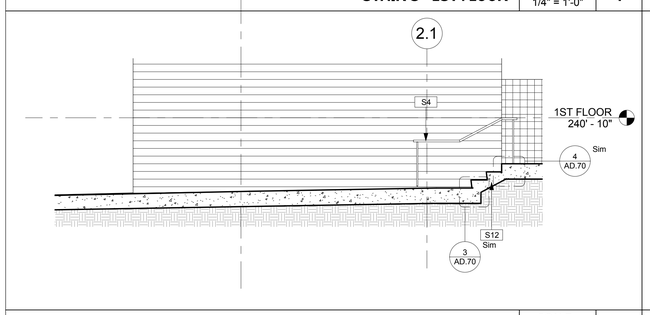

STAIR 5 - SECTION | SCALE: 1/4" = 1'-0" | 6

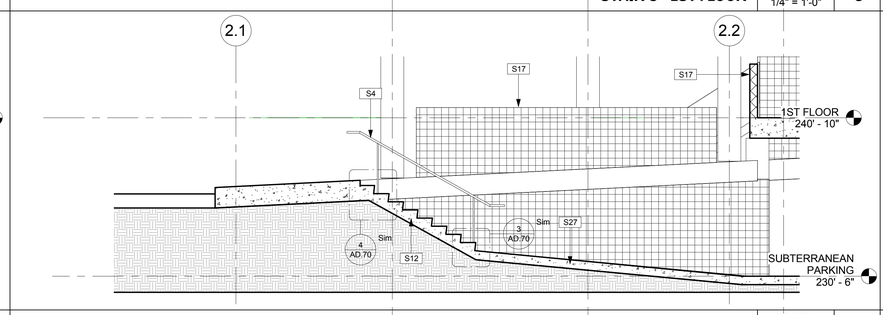

STAIR 6 - SECTION | SCALE: 1/4" = 1'-0" | 8

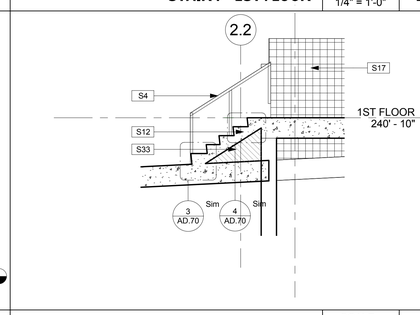

STAIR 7 - SECTION | SCALE: 1/4" = 1'-0" | 10

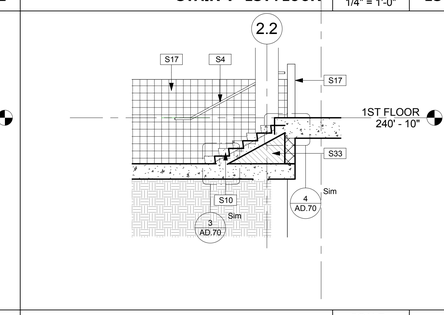

STAIR 4 - SECTION | SCALE: 1/4" = 1'-0" | 14

NO.	REVISIONS	DATE
01	PLAN CHECK REVISIONS	06/06/2016

THE ABOVE DRAWINGS AND SPECIFICATIONS AND REPORTS CONTAINED HEREIN ARE AND SHALL REMAIN THE PROPERTY OF THE ARCHITECT AND NO PART THEREOF SHALL BE CONVEYED OR REPRODUCED OR USED IN CONNECTION WITH ANY OTHER WORK OR PROJECT OTHER THAN THE SPECIFIC PROJECT FOR WHICH THEY HAVE BEEN PREPARED AND DEVELOPED, WITHOUT THE WRITTEN CONSENT OF THE ARCHITECT. VISUAL CONTACT WITH THESE DRAWINGS AND SPECIFICATIONS SHALL CONSTITUTE CONCLUSIVE EVIDENCE OF ACCEPTANCE OF THESE RESTRICTIONS.

LICENSED ARCHITECT
STEPHEN M. ALBERT
NO. C 9412
REN. 5-31-13
STATE OF CALIFORNIA

1833 N. GAREY AVE.

1833 NORTH GAREY AVENUE
PAMONA, CALIFORNIA 91767

ENLARGED STAIR & ELEVATOR PLANS AND SECTIONS

the albert group architects
2202 Stoner Ave | Los Angeles, CA 90025 310.478.8585

C.U.P NUMBER:

PROJECT NUMBER: 14130

PROJECT STATUS: PLAN CHECK RESUBMITTAL

ISSUE DATE: 07/18/2016

SHEET NUMBER: A6.03

Mark	Type	Measurements		Door		Frame		Hardware	Fire Rating	Details			Notes
		Width	Height	Material	Finish	Material	Finish			Head	Jamb	Sill	
001.1	A	3' - 0"	7' - 0"	STL	PF	HM	PF	2	90 MIN	14 | AD.50		20 | AD.50	
001.2	A	3' - 0"	7' - 0"	STL	PF	HM	PF	2		14 | AD.50		20 | AD.50	
002.1	A	3' - 0"	7' - 0"	STL	PF	HM	PF	2	20 MIN	17 | AD.50		20 | AD.50	
003.1	A	3' - 0"	7' - 0"	STL	PF	HM	PF	2	20 MIN	17 | AD.50		20 | AD.50	
004.1	A	3' - 0"	7' - 0"	STL	PF	HM	PF	2	20 MIN	17 | AD.50		20 | AD.50	
005.1	A	3' - 0"	7' - 0"	STL	PF	HM	PF	2	20 MIN	17 | AD.50		20 | AD.50	

Mark	Type	Measurements		Door		Frame		Hardware	Fire Rating	Details			Notes
		Width	Height	Material	Finish	Material	Finish			Head	Jamb	Sill	
100.1	A	3' - 0"	7' - 0"	STL	PF	HM	PF	2	90 MIN	13 | AD.51	13 | AD.51	20 | AD.50	
101.1	A	3' - 0"	7' - 0"	STL	PF	HM	PF	2	90 MIN	13 | AD.51	13 | AD.51	20 | AD.50	
101.2	I	3' - 0"	6' - 0"	STL	PF	HM	PF	2					
101.3	B	11' - 4"	7' - 0"	STL	PF	HM	PF	2		8 | AD.50	7 | AD.50		
101.4	C	6' - 6"	7' - 0"	STL	PF	HM	PF	2		8 | AD.50	7 | AD.40		
102.1	D	3' - 0"	7' - 0"	AL & GL	PC	ALUM	PC	1		3 | AD.41	2 | AD.41	22 | AD.413	
102.2	D	3' - 0"	7' - 0"	AL & GL	PC	ALUM	PC	1		3 | AD.41	2 | AD.41	22 | AD.413	
102.3	D	3' - 0"	7' - 0"	AL & GL	PC	ALUM	PC	1		3 | AD.41	2 | AD.41	22 | AD.413	
102.4	A	3' - 0"	7' - 0"	HC WD	PF	HM	PF	1	90 MIN	4 | AD.50	4 | AD.50	3 | AD.50	
102.5	A	3' - 0"	7' - 0"	STL	PF	HM	PF	2	90 MIN	4 | AD.50	4 | AD.50	3 | AD.50	
103.1	D	3' - 0"	7' - 0"	AL & GL	PC	ALUM	PC	1		3 | AD.41	2 | AD.41	22 | AD.413	
103.2	A	3' - 0"	7' - 0"	STL	PF	HM	PF	2	45 MIN	17 | AD.50		19 | AD.50	
103.3	A	3' - 0"	7' - 0"	STL	FP	HM	PF	2	90 MIN	17 | AD.50		19 | AD.50	
103.4	A	3' - 0"	7' - 0"	STL	FP	HM	PF	1	90 MIN	4 | AD.50	4 | AD.50	3 | AD.50	
104.1	D	3' - 0"	7' - 0"	AL & GL	PC	ALUM	PC	1		3 | AD.41	2 | AD.41	22 | AD.413	
104.2	A	3' - 0"	7' - 0"	STL	PF	HM	PF	2	90 MIN	17 | AD.50		19 | AD.50	
104.3	A	3' - 0"	7' - 0"	STL	FP	HM	PF	1	90 MIN	4 | AD.50	4 | AD.50	3 | AD.50	
105.1	D	3' - 0"	7' - 0"	AL & GL	PC	ALUM	PC	1		3 | AD.41	2 | AD.41	22 | AD.413	
105.2	A	3' - 0"	7' - 0"	STL	PF	HM	PF	2	90 MIN	17 | AD.50		19 | AD.50	
105.3	A	3' - 0"	7' - 0"	STL	PF	HM	PF	1	90 MIN	4 | AD.50	4 | AD.50	3 | AD.50	
106.1	D	3' - 0"	7' - 0"	AL & GL	PC	ALUM	PC	1		3 | AD.41	2 | AD.41	22 | AD.413	
106.2	A	3' - 0"	7' - 0"	STL	PF	HM	PF	2	90 MIN	17 | AD.50		19 | AD.50	
107.1	H	3' - 0"	7' - 0"	AL & GL	PC	ALUM	PC	1		3 | AD.41	2 | AD.41	22 | AD.413	
108.1	A	3' - 0"	7' - 0"	STL	PF	HM	PF	2	90 MIN	17 | AD.50		19 | AD.50	
109.1	E	6' - 0"	7' - 0"	STL	PF	HM	PF	2	45 MIN	17 | AD.50		19 | AD.50	

Mark	Type	Measurements		Door		Frame		Hardware	Fire Rating	Details			Notes
		Width	Height	Material	Finish	Material	Finish			Head	Jamb	Sill	
200.1	A	3' - 0"	7' - 0"	STL	PF	HM	PF	2	90 MIN	15 | AD.50	14 | AD.50	20 | AD.50	
201.1	A	3' - 0"	7' - 0"	SC WD	PF	HM	PF	2	20 MIN	16 | AD.50	12 | AD.50	19 | AD.50	
202.1	A	3' - 0"	7' - 0"	SC WD	PF	HM	PF	2	20 MIN	16 | AD.50	12 | AD.50	19 | AD.50	
203.1	A	3' - 0"	7' - 0"	SC WD	PF	HM	PF	2	20 MIN	16 | AD.50	12 | AD.50	19 | AD.50	
203.2	G	6' - 0"	7' - 0"	AL & GL	PC	ALUM	PC	1		11 | AD.50	7 | AD.40	10 | AD.50	
204.1	A	3' - 0"	7' - 0"	SC WD	PF	HM	PF	2	20 MIN	16 | AD.50	12 | AD.50	19 | AD.50	
204.2	G	7' - 6"	8' - 7"	AL & GL	PC	ALUM	PC	1		11 | AD.50	7 | AD.40	10 | AD.50	
205.1	A	3' - 0"	7' - 0"	SC WD	PF	HM	PF	2	20 MIN	16 | AD.50	12 | AD.50	19 | AD.50	
205.2	G	7' - 0"	8' - 7"	AL & GL	PC	ALUM	PC	1		11 | AD.50	7 | AD.40	10 | AD.50	
206.1	A	3' - 0"	7' - 0"	SC WD	PF	HM	PF	2	20 MIN	16 | AD.50	12 | AD.50	19 | AD.50	
206.2	A	3' - 0"	7' - 0"	SC WD	PF	HM	PF	2		12 | AD.50	12 | AD.50	20 | AD.50	
207.1	A	3' - 0"	7' - 0"	SC WD	PF	HM	PF	2	20 MIN	16 | AD.50	12 | AD.50	19 | AD.50	
207.2	H	3' - 6"	8' - 7"	AL & GL	PC	ALUM	PC	1		3 | AD.41	2 | AD.41	22 | AD.413	
208.1	A	3' - 0"	7' - 0"	SC WD	PF	HM	PF	2	20 MIN	16 | AD.50	12 | AD.50	19 | AD.50	
208.2	H	3' - 0"	8' - 7"	AL & GL	PC	ALUM	PC	1		3 | AD.41	2 | AD.41	22 | AD.413	
209.1	A	3' - 0"	7' - 0"	SC WD	PF	HM	PF	2	20 MIN	16 | AD.50	12 | AD.50	19 | AD.50	
209.2	G	7' - 0"	8' - 7"	AL & GL	PC	ALUM	PC	1		11 | AD.50	7 | AD.40	10 | AD.50	
210.1	A	3' - 0"	7' - 0"	SC WD	PF	HM	PF	2	20 MIN	16 | AD.50	12 | AD.50	19 | AD.50	
210.2	H	3' - 0"	8' - 7"	AL & GL	PC	ALUM	PC	1		3 | AD.41	2 | AD.41	22 | AD.413	
211.1	A	3' - 0"	7' - 0"	SC WD	PF	HM	PF	2	20 MIN	16 | AD.50	12 | AD.50	19 | AD.50	
211.2	G	6' - 0"	8' - 7"	AL & GL	PC	ALUM	PC	1		11 | AD.50	7 | AD.40	10 | AD.50	
212.1	A	3' - 0"	7' - 0"	SC WD	PF	HM	PF	2	20 MIN	16 | AD.50	12 | AD.50	19 | AD.50	
212.2	G	8' - 0"	8' - 7"	AL & GL	PC	ALUM	PC	1		11 | AD.50	7 | AD.40	10 | AD.50	
213.1	A	3' - 0"	7' - 0"	SC WD	PF	HM	PF	2	20 MIN	16 | AD.50	12 | AD.50	19 | AD.50	
213.2	H	3' - 0"	8' - 7"	AL & GL	PC	ALUM	PC	1		3 | AD.41	2 | AD.41	22 | AD.413	
214.1	A	3' - 0"	7' - 0"	SC WD	PF	HM	PF	2	20 MIN	16 | AD.50	12 | AD.50	19 | AD.50	
215.1	A	3' - 0"	7' - 0"	SC WD	PF	HM	PF	2	20 MIN	16 | AD.50	12 | AD.50	19 | AD.50	
215.2	H	3' - 0"	8' - 7"	AL & GL	PC	ALUM	PC	1		3 | AD.41	2 | AD.41	22 | AD.413	
216.1	A	3' - 0"	7' - 0"	SC WD	PF	HM	PF	2	20 MIN	16 | AD.50	12 | AD.50	19 | AD.50	
216.2	G	7' - 0"	8' - 7"	AL & GL	PC	ALUM	PC	1		11 | AD.50	7 | AD.40	10 | AD.50	
217.1	A	3' - 0"	7' - 0"	SC WD	PF	HM	PF	2	20 MIN	16 | AD.50	12 | AD.50	19 | AD.50	
217.2	G	7' - 0"	8' - 7"	AL & GL	PC	ALUM	PC	1		11 | AD.50	7 | AD.40	10 | AD.50	
218.1	A	3' - 0"	7' - 0"	SC WD	PF	HM	PF	2	20 MIN	16 | AD.50	12 | AD.50	19 | AD.50	
218.2	G	7' - 0"	8' - 7"	AL & GL	PC	ALUM	PC	1		11 | AD.50	7 | AD.40	10 | AD.50	
218.3	G	7' - 0"	8' - 7"	AL & GL	PC	ALUM	PC	1		11 | AD.50	7 | AD.40	10 | AD.50	
219.1	A	6' - 0"	7' - 0"	SC WD	PF	HM	PF	2	90 MIN	16 | AD.50	12 | AD.50	19 | AD.50	
220.1	E	3' - 0"	7' - 0"	SC WD	PF	HM	PF	2	90 MIN	16 | AD.50	12 | AD.50	19 | AD.50	
220.2	F	2' - 6"	2' - 6"	STL	PF	STL	PF	1					
220.3	F	2' - 6"	2' - 6"	STL	PF	STL	PF	1					

Mark	Type	Measurements		Door		Frame		Hardware	Fire Rating	Details			Notes
		Width	Height	Material	Finish	Material	Finish			Head	Jamb	Sill	
300.1	A	3' - 0"	7' - 0"	STL	PF	STL	PF	2	90 MIN	15 | AD.50	14 | AD.50	20 | AD.50	
301.1	A	3' - 0"	7' - 0"	SC WD	PF	HM	PF	2	20 MIN	16 | AD.50	12 | AD.50	18 | AD.50	
302.1	A	3' - 0"	7' - 0"	SC WD	PF	HM	PF	2	20 MIN	16 | AD.50	12 | AD.50	18 | AD.50	
303.1	A	3' - 0"	7' - 0"	SC WD	PF	HM	PF	2	20 MIN	16 | AD.50	12 | AD.50	18 | AD.50	
303.2	G	6' - 0"	7' - 0"	AL & GL	PC	ALUM	PC	1		11 | AD.50	7 | AD.40	9 | AD.50	
304.1	A	3' - 0"	7' - 0"	SC WD	PF	HM	PF	2	20 MIN	16 | AD.50	12 | AD.50	18 | AD.50	
304.2	H	4' - 0"	7' - 10"	AL & GL	PC	ALUM	PC	1		3 | AD.41	2 | AD.41	22 | AD.413	
305.1	A	3' - 0"	7' - 0"	SC WD	PF	HM	PF	2	20 MIN	16 | AD.50	12 | AD.50	18 | AD.50	
305.2	G	8' - 1 1/2"	8' - 6 1/2"	AL & GL	PC	ALUM	PC	1		11 | AD.50	7 | AD.40	9 | AD.50	
306.1	A	3' - 0"	7' - 0"	SC WD	PF	HM	PF	2	20 MIN	16 | AD.50	12 | AD.50	18 | AD.50	
306.2	A	3' - 0"	7' - 0"	SC WD	PF	HM	PF	2		12 | AD.50	12 | AD.50	20 | AD.50	
307.1	A	3' - 0"	7' - 0"	SC WD	PF	HM	PF	2	20 MIN	16 | AD.50	12 | AD.50	18 | AD.50	
307.2	G	7' - 1 1/2"	7' - 10"	AL & GL	PC	ALUM	PC	1		11 | AD.50	7 | AD.40	9 | AD.50	
308.1	A	3' - 0"	7' - 0"	SC WD	PF	HM	PF	2	20 MIN	16 | AD.50	12 | AD.50	18 | AD.50	
308.2	G	7' - 7 1/2"	11' - 9 1/2"	AL & GL	PC	ALUM	PC	1		11 | AD.50	7 | AD.40	9 | AD.50	
309.1	A	3' - 0"	7' - 0"	SC WD	PF	HM	PF	2	20 MIN	16 | AD.50	12 | AD.50	18 | AD.50	
309.2	G	7' - 6"	11' - 9 1/2"	AL & GL	PC	ALUM	PC	1		11 | AD.50	7 | AD.40	9 | AD.50	
310.1	A	3' - 0"	7' - 0"	SC WD	PF	HM	PF	2	20 MIN	16 | AD.50	12 | AD.50	18 | AD.50	
310.2	H	3' - 0"	7' - 10"	AL & GL	PC	ALUM	PC	1		3 | AD.41	2 | AD.41	22 | AD.413	
311.1	A	3' - 0"	7' - 0"	SC WD	PF	HM	PF	2	20 MIN	16 | AD.50	12 | AD.50	18 | AD.50	
311.2	H	3' - 0"	11' - 10 1/2"	AL & GL	PC	ALUM	PC	1		3 | AD.41	2 | AD.41	22 | AD.413	
312.1	A	3' - 0"	7' - 0"	SC WD	PF	HM	PF	2	20 MIN	16 | AD.50	12 | AD.50	18 | AD.50	
312.2	G	7' - 1 1/2"	8' - 6 1/2"	AL & GL	PC	ALUM	PC	1		11 | AD.50	7 | AD.40	9 | AD.50	
313.1	A	3' - 0"	7' - 0"	SC WD	PF	HM	PF	2	20 MIN	16 | AD.50	12 | AD.50	18 | AD.50	
313.2	H	3' - 0"	11' - 9 1/2"	AL & GL	PC	ALUM	PC	1		3 | AD.41	2 | AD.41	22 | AD.413	
314.1	A	3' - 0"	7' - 0"	SC WD	PF	HM	PF	2	20 MIN	16 | AD.50	12 | AD.50	18 | AD.50	
315.1	A	3' - 0"	7' - 0"	SC WD	PF	HM	PF	2	20 MIN	16 | AD.50	12 | AD.50	18 | AD.50	
315.2	G	7' - 6"	11' - 9 1/2"	AL & GL	PC	ALUM	PC	1		11 | AD.50	7 | AD.40	9 | AD.50	
316.1	A	3' - 0"	7' - 0"	SC WD	PF	HM	PF	2	20 MIN	16 | AD.50	12 | AD.50	18 | AD.50	
316.2	H	4' - 0"	11' - 9 1/2"	AL & GL	PC	ALUM	PC	1		3 | AD.41	2 | AD.41	22 | AD.413	
317.1	A	3' - 0"	7' - 0"	SC WD	PF	HM	PF	2	20 MIN	16 | AD.50	12 | AD.50	18 | AD.50	
317.2	G	7' - 0"	11' - 9"	AL & GL	PC	ALUM	PC	1		11 | AD.50	7 | AD.40	9 | AD.50	
317.3	G	7' - 0"	11' - 9"	AL & GL	PC	ALUM	PC	1		11 | AD.50	7 | AD.40	9 | AD.50	
318.1	A	3' - 0"	7' - 0"	SC WD	PF	HM	PF	2	90 MIN	16 | AD.50	12 | AD.50	18 | AD.50	
318.2	F	2' - 6"	2' - 6"	STL	PF	STL	PF	1					
318.3	F	2' - 6"	2' - 6"	STL	PF	STL	PF	1					

Mark	Type	Measurements		Door		Frame		Hardware	Fire Rating	Details			Notes
		Width	Height	Material	Finish	Material	Finish			Head	Jamb	Sill	
400.1	A	3' - 0"	7' - 0"	STL	PF	HM	PF	2	90 MIN	15 | AD.50	14 | AD.50	20 | AD.50	

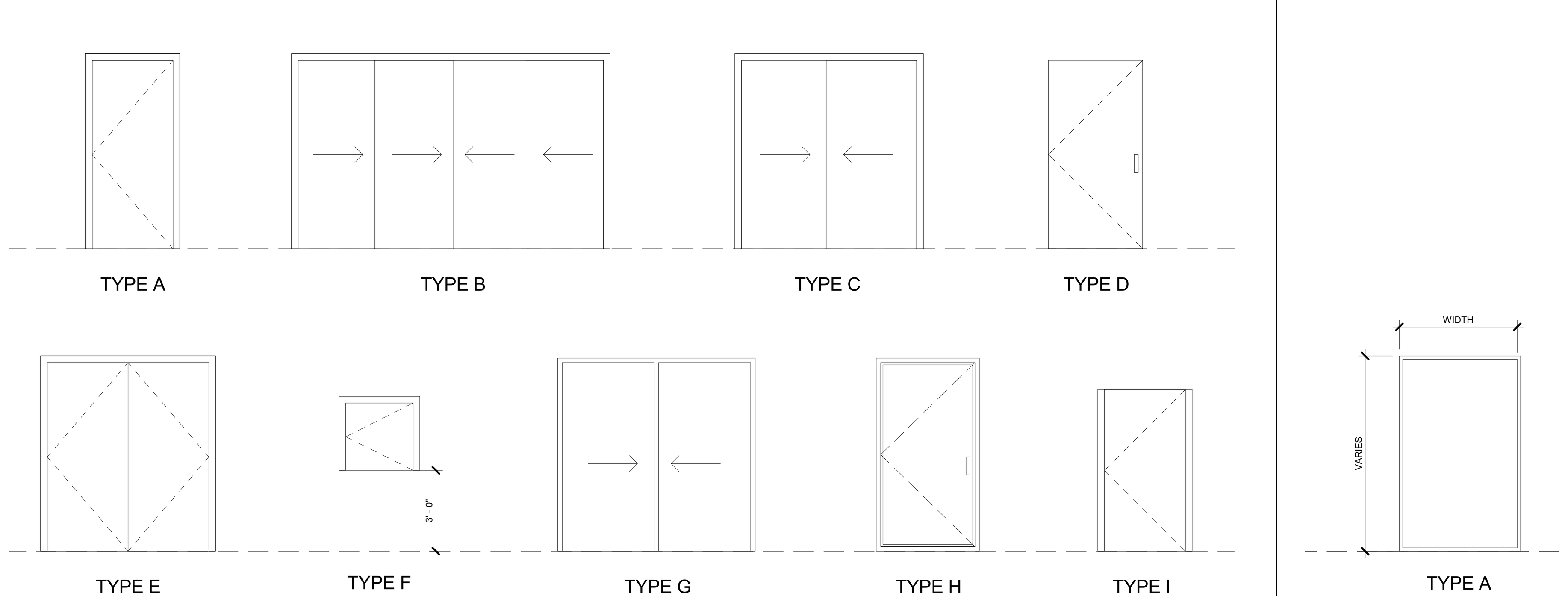

DOOR TYPES

SCALE: 1/4" = 1'-0"

No	Type	Measurements		Operation	Material	Finish	Fire Rating	Details			Notes
		Width	Height					Head	Jamb	Sill	
201.1	B	4' - 0"	8' - 7"	CA - FX	ALUM	PC		8 | AD.40	7 | AD.40	4 | AD.40	
201.2	A	3' - 6"	8' - 7"	FX	ALUM	PC		3 | AD.41	2 | AD.41	11 | AD.41	
201.3	B	3' - 6"	8' - 7"	CA - FX	ALUM	PC		8 | AD.40	7 | AD.40	4 | AD.40	
201.4	B	4' - 0"	8' - 7"	CA - FX	ALUM	PC		8 | AD.40	7 | AD.40	4 | AD.40	
202.1	B	4' - 0"	8' - 7"	CA - FX	ALUM	PC		8 | AD.40	7 | AD.40	4 | AD.40	
202.2	A	4' - 0"	8' - 7"	FX	ALUM	PC		3 | AD.41	2 | AD.41	11 | AD.41	
202.3	B	4' - 0"	8' - 7"	CA - FX	ALUM	PC		8 | AD.40	7 | AD.40	4 | AD.40	
202.4	B	4' - 6"	8' - 7"	CA - FX	ALUM	PC		8 | AD.40	7 | AD.40	4 | AD.40	
203.1	A	3' - 3"	8' - 7"	FX	ALUM	PC		3 | AD.41	2 | AD.41	11 | AD.41	
203.2	A	3' - 3"	8' - 7"	FX	ALUM	PC		3 | AD.41	2 | AD.41	11 | AD.41	
203.3	A	4' - 0"	8' - 7"	FX	ALUM	PC		3 | AD.41	2 | AD.41	11 | AD.41	
203.4	B	4' - 0"	8' - 7"	CA - FX	ALUM	PC		8 | AD.40	7 | AD.40	4 | AD.40	
203.4	A	4' - 0"	8' - 7"	FX	ALUM	PC		3 | AD.41	2 | AD.41	11 | AD.41	
203.5	B	4' - 0"	8' - 7"	CA - FX	ALUM	PC		8 | AD.40	7 | AD.40	4 | AD.40	
204.2	B	4' - 6"	8' - 7"	CA - FX	ALUM	PC		8 | AD.40	7 | AD.40	4 | AD.40	
204.3	B	4' - 6"	8' - 7"	CA - FX	ALUM	PC		8 | AD.40	7 | AD.40	4 | AD.40	
205.2	B	4' - 6"	8' - 7"	CA - FX	ALUM	PC		8 | AD.40	7 | AD.40	4 | AD.40	
206.1	B	4' - 6"	8' - 7"	CA - FX	ALUM	PC		8 | AD.40	7 | AD.40	4 | AD.40	
206.3	B	4' - 6"	8' - 7"	CA - FX	ALUM	PC		8 | AD.40	7 | AD.40	4 | AD.40	
207.1	B	4' - 6"	8' - 7"	CA - FX	ALUM	PC		8 | AD.40	7 | AD.40	4 | AD.40	
207.2	B	4' - 0"	8' - 7"	CA - FX	ALUM	PC		8 | AD.40	7 | AD.40	4 | AD.40	
207.3	A	4' - 0"	8' - 7"	FX	ALUM	PC		3 | AD.41	2 | AD.41	11 | AD.41	
207.4	A	4' - 0"	8' - 7"	FX	ALUM	PC		3 | AD.41	2 | AD.41	11 | AD.41	
208.1	B	4' - 6"	8' - 7"	CA - FX	ALUM	PC		8 | AD.40	7 | AD.40	4 | AD.40	
208.2	B	4' - 6"	8' - 7"	CA - FX	ALUM	PC		8 | AD.40	7 | AD.40	4 | AD.40	
208.3	A	3' - 6"	8' - 7"	FX	ALUM	PC		3 | AD.41	2 | AD.41	11 | AD.41	
209.1	B	4' - 6"	8' - 7"	CA - FX	ALUM	PC		8 | AD.40	7 | AD.40	4 | AD.40	
209.2	B	4' - 6"	8' - 7"	CA - FX	ALUM	PC		8 | AD.40	7 | AD.40	4 | AD.40	
210.1	B	4' - 0"	8' - 7"	CA - FX	ALUM	PC		8 | AD.40	7 | AD.40	4 | AD.40	
210.2	B	4' - 0"	8' - 7"	CA - FX	ALUM	PC		8 | AD.40	7 | AD.40	4 | AD.40	
210.3	A	4' - 0"	8' - 7"	FX	ALUM	PC		3 | AD.41	2 | AD.41	11 | AD.41	
210.4	B	4' - 0"	8' - 7"	CA - FX	ALUM	PC		8 | AD.40	7 | AD.40	4 | AD.40	
211.1	B	3' - 6"	8' - 7"	CA - FX	ALUM	PC		8 | AD.40	7 | AD.40	4 | AD.40	
211.2	A	4' - 0"	8' - 7"	FX	ALUM	PC		3 | AD.41	2 | AD.41	11 | AD.41	
212.1	B	4' - 6"	8' - 7"	CA - FX	ALUM	PC		8 | AD.40	7 | AD.40	4 | AD.40	
213.1	B	4' - 0"	8' - 7"	CA - FX	ALUM	PC		8 | AD.40	7 | AD.40	4 | AD.40	
213.2	B	3' - 6"	8' - 7"	CA - FX	ALUM	PC		8 | AD.40	7 | AD.40	4 | AD.40	
214.1	B	4' - 6"	8' - 7"	CA - FX	ALUM	PC		8 | AD.40	7 | AD.40	4 | AD.40	
214.2	B	4' - 6"	8' - 7"	CA - FX	ALUM	PC		8 | AD.40	7 | AD.40	4 | AD.40	
215.1	A	3' - 6"	8' - 7"	FX	ALUM	PC		3 | AD.41	2 | AD.41	11 | AD.41	
215.2	B	3' - 6"	8' - 7"	CA - FX	ALUM	PC		8 | AD.40	7 | AD.40	4 | AD.40	
216.1	B	3' - 6"	8' - 7"	CA - FX	ALUM	PC		8 | AD.40	7 | AD.40	4 | AD.40	
216.2	A	3' - 6"	8' - 7"	FX	ALUM	PC		3 | AD.41	2 | AD.41	11 | AD.41	
217.1	A	4' - 0"	8' - 7"	FX	ALUM	PC		3 | AD.41	2 | AD.41	11 | AD.41	
217.2	A	3' - 6"	8' - 7"	FX	ALUM	PC		3 | AD.41	2 | AD.41	11 | AD.41	
218.1	A	4' - 0"	8' - 7"	FX	ALUM	PC		3 | AD.41	2 | AD.41	11 | AD.41	
218.2	A	4' - 0"	8' - 7"	FX	ALUM	PC		3 | AD.41	2 | AD.41	11 | AD.41	
218.3	B	4' - 0"	8' - 7"	CA - FX	ALUM	PC		8 | AD.40	7 | AD.40	4 | AD.40	

No	Type	Measurements		Operation	Material	Finish	Fire Rating	Details			Notes
		Width	Height					Head	Jamb	Sill	
219.1	A	2' - 7 3/4"	8' - 3 1/2"	FX	ALUM	PC		3 | AD.41	2 | AD.41	1 | AD.41	
219.2	A	2' - 8 1/2"	8' - 3 1/2"	FX	ALUM	PC		3 | AD.41	2 | AD.41	1 | AD.41	
219.3	A	2' - 8 1/2"	8' - 3 1/2"	FX	ALUM	PC		3 | AD.41	2 | AD.41	1 | AD.41	
219.4	A	2' - 7 3/4"	8' - 3 1/2"	FX	ALUM	PC		3 | AD.41	2 | AD.41	1 | AD.41	
301.1	B	4' - 0"	7' - 10"	CA - FX	ALUM	PC		8 | AD.40	7 | AD.40	4 | AD.40	
301.2	B	3' - 10"	8' - 7"	CA - FX	ALUM	PC		8 | AD.40	7 | AD.40	4 | AD.40	
301.3	B	4' - 0"	7' - 10"	CA - FX	ALUM	PC		8 | AD.40	7 | AD.40	4 | AD.40	
301.4	B	4' - 0"	7' - 7"	CA - FX	ALUM	PC		8 | AD.40	7 | AD.40	4 | AD.40	
301.5	A	3' - 10"	7' - 7"	FX	ALUM	PC		3 | AD.41	2 | AD.41	1 | AD.41	
301.6	B	4' - 0"	7' - 7"	CA - FX	ALUM	PC		8 | AD.40	7 | AD.40	4 | AD.40	
302.1	B	4' - 0"	7' - 10"	CA - FX	ALUM	PC		8 | AD.40	7 | AD.40	4 | AD.40	
302.2	B	4' - 0"	8' - 7"	CA - FX	ALUM	PC		8 | AD.40	7 | AD.40	4 | AD.40	
302.3	A	4' - 6"	11' - 9 1/2"	FX	ALUM	PC		3 | AD.41	2 | AD.41	1 | AD.41	
302.4	B	4' - 6"	11' - 9 1/2"	CA - FX	ALUM	PC		8 | AD.40	7 | AD.40	4 | AD.40	
302.5	B	4' - 0"	7' - 7"	CA - FX	ALUM	PC		8 | AD.40	7 | AD.40	4 | AD.40	
302.6	A	4' - 0"	7' - 7"	FX	ALUM	PC		3 | AD.41	2 | AD.41	1 | AD.41	
302.7	C	7' - 0"	3' - 0"	FX	ALUM	PC		3 | AD.41	2 | AD.41	1 | AD.41	
303.1	A	3' - 3"	11' - 9"	FX	ALUM	PC		3 | AD.41	2 | AD.41	1 | AD.41	
303.2	A	3' - 3"	11' - 9"	FX	ALUM	PC		3 | AD.41	2 | AD.41	1 | AD.41	
303.3	A	4' - 0"	11' - 9 1/2"	FX	ALUM	PC		3 | AD.41	2 | AD.41	1 | AD.41	
303.4	A	4' - 0"	11' - 9 1/2"	FX	ALUM	PC		3 | AD.41	2 | AD.41	1 | AD.41	
303.5	B	4' - 0"	11' - 9 1/2"	CA - FX	ALUM	PC		8 | AD.40	7 | AD.40	4 | AD.40	
303.6	B	4' - 6"	11' - 9 1/2"	CA - FX	ALUM	PC		8 | AD.40	7 | AD.40	4 | AD.40	
303.7	D	3' - 4"	12' - 4"	FX	ALUM	PC		3 | AD.41	2 | AD.41	1 | AD.41	
304.1	A	4' - 6"	8' - 7"	FX	ALUM	PC		3 | AD.41	2 | AD.41	1 | AD.41	
304.2	B	4' - 6"	8' - 7"	CA - FX	ALUM	PC		8 | AD.40	7 | AD.40	4 | AD.40	
304.3	B	4' - 6"	7' - 10"	CA - FX	ALUM	PC		8 | AD.40	7 | AD.40	4 | AD.40	
304.4	B	4' - 0"	7' - 7"	CA - FX	ALUM	PC		8 | AD.40	7 | AD.40	4 | AD.40	
304.5	A	4' - 6"	7' - 7"	FX	ALUM	PC		3 | AD.41	2 | AD.41	1 | AD.41	
304.6	A	4' - 6"	7' - 7"	FX	ALUM	PC		3 | AD.41	2 | AD.41	1 | AD.41	
304.7	C	7' - 0"	3' - 0"	FX	ALUM	PC		3 | AD.41	2 | AD.41	1 | AD.41	
305.1	B	4' - 6"	11' - 9 1/2"	CA - FX	ALUM	PC		8 | AD.40	7 | AD.40	4 | AD.40	
305.2	B	4' - 6"	7' - 7"	CA - FX	ALUM	PC		8 | AD.40	7 | AD.40	4 | AD.40	
305.3	A	4' - 0"	7' - 7"	FX	ALUM	PC		3 | AD.41	2 | AD.41	1 | AD.41	
305.4	A	4' - 0"	7' - 7"	FX	ALUM	PC		3 | AD.41	2 | AD.41	1 | AD.41	
305.5	C	7' - 0"	3' - 0"	FX	ALUM	PC		3 | AD.41	2 | AD.41	1 | AD.41	
306.1	B	4' - 6"	11' - 9 1/2"	CA - FX	ALUM	PC		8 | AD.40	7 | AD.40	4 | AD.40	
306.2	A	4' - 6"	11' - 9 1/2"	FX	ALUM	PC		3 | AD.41	2 | AD.41	1 | AD.41	
306.3	B	4' - 6"	11' - 9 1/2"	CA - FX	ALUM	PC		8 | AD.40	7 | AD.40	4 | AD.40	
307.1	B	4' - 6"	7' - 10"	CA - FX	ALUM	PC		8 | AD.40	7 | AD.40	4 | AD.40	
307.2	A	4' - 0"	8' - 7"	FX	ALUM	PC		3 | AD.41	2 | AD.41	1 | AD.41	
307.3	B	4' - 0"	8' - 7"	CA - FX	ALUM	PC		8 | AD.40	7 | AD.40	4 | AD.40	
307.4	B	4' - 6"	7' - 7"	CA - FX	ALUM	PC		8 | AD.40	7 | AD.40	4 | AD.40	
307.5	A	4' - 0"	7' - 7"	FX	ALUM	PC		3 | AD.41	2 | AD.41	1 | AD.41	
307.6	A	4' - 0"	7' - 7"	FX	ALUM	PC		3 | AD.41	2 | AD.41	1 | AD.41	
307.7	C	7' - 0"	3' - 0"	FX	ALUM	PC		3 | AD.41	2 | AD.41	1 | AD.41	
308.1	B	4' - 6"	11' - 9 1/2"	CA - FX	ALUM	PC		8 | AD.40	7 | AD.40	4 | AD.40	
308.2	B	4' - 6"	11' - 9 1/2"	CA - FX	ALUM	PC		8 | AD.40	7 | AD.40	4 | AD.40	
308.3	A	4' - 6"	11' - 9 1/2"	FX	ALUM	PC		3 | AD.41	2 | AD.41	1 | AD.41	
308.4	B	3' - 6"	7' - 7"	CA - FX	ALUM	PC		8 | AD.40	7 | AD.40	4 | AD.40	
308.5	A	3' - 6"	7' - 7"	FX	ALUM	PC		3 | AD.41	2 | AD.41	1 | AD.41	
308.6	C	7' - 0"	3' - 0"	FX	ALUM	PC		3 | AD.41	2 | AD.41	1 | AD.41	
309.1	B	4' - 6"	11' - 9 1/2"	CA - FX	ALUM	PC		8 | AD.40	7 | AD.40	4 | AD.40	
309.2	B	4' - 6"	11' - 9 1/2"	CA - FX	ALUM	PC		8 | AD.40	7 | AD.40	4 | AD.40	
310.1	B	4' - 0"	7' - 10"	CA - FX	ALUM	PC		8 | AD.40	7 | AD.40	4 | AD.40	
310.2	B	3' - 6"	7' - 10"	CA - FX	ALUM	PC		8 | AD.40	7 | AD.40	4 | AD.40	
310.3	B	4' - 0"	8' - 7"	CA - FX	ALUM	PC		8 | AD.40	7 | AD.40	4 | AD.40	
310.4	B	4' - 0"	7' - 7"	CA - FX	ALUM	PC		8 | AD.40	7 | AD.40	4 | AD.40	
310.5	A	3' - 0"	7' - 7"	FX	ALUM	PC		3 | AD.41	2 | AD.41	1 | AD.41	
310.6	B	3' - 6"	7' - 7"	CA - FX	ALUM	PC		8 | AD.40	7 | AD.40	4 | AD.40	
310.7	A	4' - 0"	7' - 7"	FX	ALUM	PC		3 | AD.41	2 | AD.41	1 | AD.41	
310.8	C	7' - 0"	3' - 0"	FX	ALUM	PC		3 | AD.41	2 | AD.41	1 | AD.41	
311.1	B	3' - 0"	11' - 9 1/2"	CA - FX	ALUM	PC		8 | AD.40	7 | AD.40	4 | AD.40	
311.2	A	3' - 0"	11' - 9 1/2"	FX	ALUM	PC		3 | AD.41	2 | AD.41	1 | AD.41	
312.1	B	4' - 6"	11' - 9 1/2"	CA - FX	ALUM	PC		8 | AD.40	7 | AD.40	4 | AD.40	
312.2	A	3' - 6"	7' - 7"	FX	ALUM	PC		3 | AD.41	2 | AD.41	1 | AD.41	
312.3	A	3' - 6"	7' - 7"	FX	ALUM	PC		3 | AD.41	2 | AD.41	1 | AD.41	
312.4	C	7' - 0"	3' - 0"	FX	ALUM	PC		3 | AD.41	2 | AD.41	1 | AD.41	
313.1	B	4' - 0"	8' - 7"	CA - FX	ALUM	PC		8 | AD.40	7 | AD.40	4 | AD.40	
313.2	A	4' - 0"	8' - 7"	FX	ALUM	PC		3 | AD.41	2 | AD.41	1 | AD.41	
313.3	B	3' - 6"	11' - 9 1/2"	CA - FX	ALUM	PC		8 | AD.40	7 | AD.40	4 | AD.40	
313.4	A	4' - 0"	7' - 7"	FX	ALUM	PC		3 | AD.41	2 | AD.41	1 | AD.41	
313.5	A	4' - 0"	7' - 7"	FX	ALUM	PC		3 | AD.41	2 | AD.41	1 | AD.41	
313.6	C	7' - 0"	3' - 0"	FX	ALUM	PC		3 | AD.41	2 | AD.41	1 | AD.41	
313.7	D	3' - 4"	12' - 4"	FX	ALUM	PC		3 | AD.41	2 | AD.41	1 | AD.41	
314.1	B	4' - 6"	7' - 10"	CA - FX	ALUM	PC		8 | AD.40	7 | AD.40	4 | AD.40	
314.2	B	4' - 6"	8' - 7"	CA - FX	ALUM	PC		8 | AD.40	7 | AD.40	4 | AD.40	
314.3	B	4' - 6"	7' - 7"	CA - FX	ALUM	PC		8 | AD.40	7 | AD.40	4 | AD.40	
314.4	A	4' - 6"	7' - 7"	FX	ALUM	PC		3 | AD.41	2 | AD.41	1 | AD.41	
314.5	C	7' - 0"	3' - 0"	FX	ALUM	PC		3 | AD.41	2 | AD.41	1 | AD.41	
315.1	B	4' - 0"	11' - 9 1/2"	CA - FX	ALUM	PC		8 | AD.40	7 | AD.40	4 | AD.40	
315.2	A	3' - 6"	11' - 9 1/2"	FX	ALUM	PC		3 | AD.41	2 | AD.41	1 | AD.41	
316.1	B	3' - 7"	11' - 9 1/2"	CA - FX	ALUM	PC		8 | AD.40	7 | AD.40	4 | AD.40	
316.2	A	3' - 0"	11' - 9 1/2"	FX	ALUM	PC		3 | AD.41	2 | AD.41	1 | AD.41	
316.3	B	3' - 6"	11' - 9 1/2"	CA - FX	ALUM	PC		8 | AD.40	7 | AD.40	4 | AD.40	
317.1	A	4' - 0"	11' - 9 3/4"	FX	ALUM	PC		3 | AD.41	2 | AD.41	1 | AD.41	
317.2	A	4' - 0"	11' - 9 3/4"	FX	ALUM	PC		3 | AD.41	2 | AD.41	1 | AD.41	
317.3	B	4' - 0"	11' - 9 1/2"	CA - FX	ALUM	PC		8 | AD.40	7 | AD.40	4 | AD.40	

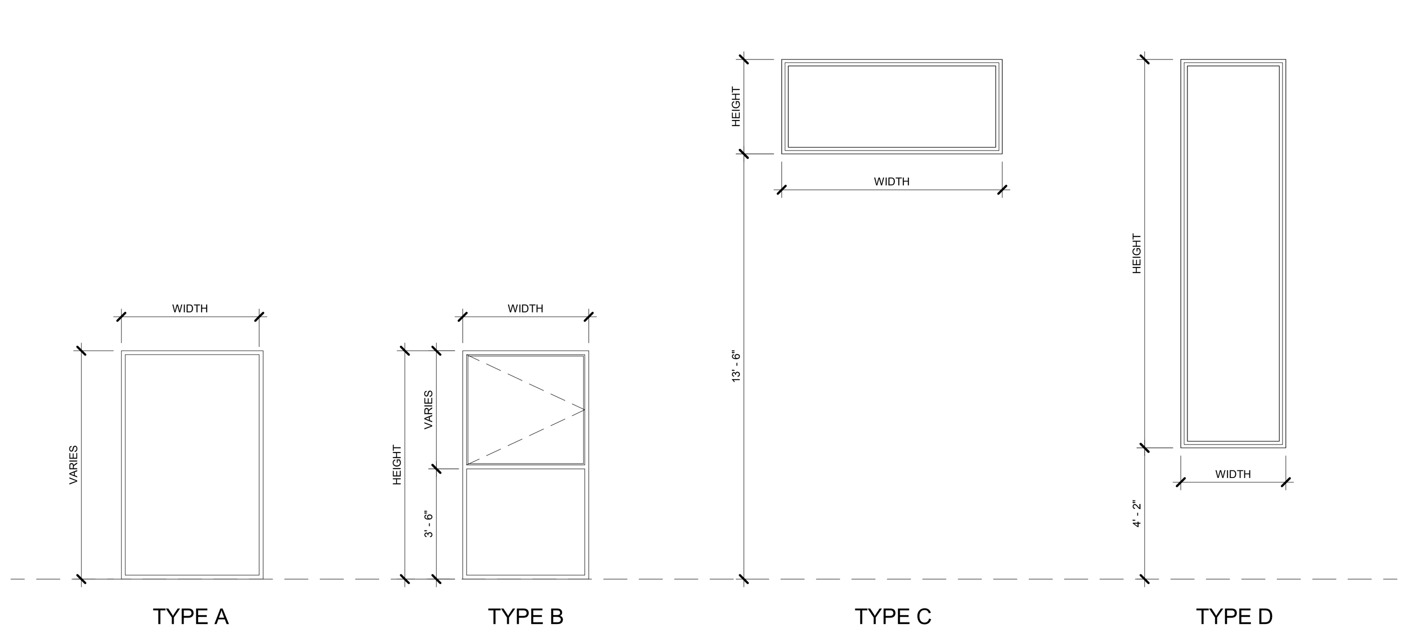

WINDOW TYPES

SCALE: 1/4" = 1'-0"

DOOR NOTES

1. EXTERIOR DOORS, PROVIDE AND INSTALL WEATHER STRIPPING
2. INTERIOR DOORS, FLUSH, WITHOUT PANELS, TYPICAL U.N.O.
3. DOOR ASSEMBLY SHALL NOT HAVE A FIRE PROTECTION RATING OF NOT LESS THAN 1 HOUR WITH SELF CLOSER, SMOKE GASKETED ("S" RATED)
4. SECURITY OPENING, PROVIDE PANIC HARDWARE.
5. PROVIDE AND INSTALL SCREEN DOORS.
6. SELF CLOSER, ("S" RATED) SMOKE GASKETED / DRAFT CONTROLS
7. TEMPERED GLAZING
8. ALL DOORS & MOISTURE PROTECTION SHALL BE INSTALLED PER DOOR MANUFACTURERS SPECIFICATIONS.
9. LOUVERED
10. PROVIDE ELECTRIC HOLD-OPEN DEVICE AT ALL ELEVATOR-SMOKE DOORS & AT AREA SEPERATION WALL DOORS, SHALL BE AUTOMATIC - CLOSING BY ACTUATION OF A SMOKE DETECTOR INSTALLED IN ACCORDANCE WITH 715.4.7.3 (1022.3)
11. TO BE TESTED IN ACCORDANCE WITH UL1784 WITHOUT AN ARTIFICIAL BOTTOM SEAL (707.14.1)

WINDOW NOTES

1. WINDOWS OCCURING AT SLEEPING ROOMS, WHEN USED AS EGRESS, SHALL PROVIDE THE MINIMUM NET CLEAR OPENING REQUIRED BY UBC 1026 FOR EMERGENCY ESCAPE AND RESCUE. MINIMUM CLEAR WIDTH = 20", HEIGHT - 24", OPENING AREA = 5.75 SF MINIMUM, WITH A MAX OPENING HEIGHT FROM FLOOR = 44"
2. TEMPERED GLAZING
3. ALL MOISTURE PROTECTION SHALL BE INSTALLED PER WINDOW MANUFACTURER'S SPECIFICATIONS
4. SELF CLOSER ("S" RATED), SMOKE GASKETED / DRAFT CONTROLS
5. SEE 1/AD.40 FOR FLASHING SEQUENCES
6. VALUE ENGINEERING OPTION TO PROTECT WINDOW OPENING WITH WATER CURTAIN IN LIEU OF FIRE RATED GLASS, PER LADBS INFORMATION BULLETIN P/BC 2014-106

STOREFRONT NOTES

1. ALL GLAZING TO BE TEMPERED, BOTH DOORS AND WINDOWS
2. ALL MOISTURE PROTECTION SHALL BE INSTALLED PER WINDOW MANUFACTURER'S SPECIFICATIONS
3. ALL GLAZING TO BE SOLARBAN 60 STARPHIRE, 1" IGU
4. COMMERCIAL AREA GLAZING SYSTEM TO ACHEIVE A MINIMUM STC RATING OF 40 (OR OITC OF 30), FOR COMPLIANCE WITH GREEN BUILDING REQUIREMENTS (5.507.4)
5. VERIFY ALL STOREFRONT DIMENSIONS IN FIELD PRIOR TO FABRICATION

DOOR & WINDOW ABBREVIATIONS

*	DENOTES EGRESS	PF	PAINTED FINISH
ALUM	ALUMINUM	RG	REEDED GLASS
BF	BI-FOLDING	SC	SOLID CORE
CA	CASEMENT	SF	STORE FRONT
CLR	CLEAR ANODIZED	SG	SINGLE GLAZED
DG	DUAL GLAZED	SGD	SLIDING GLASS DOOR
ENT	ENTRY	SH	SINGLE HINGE
EXT	EXTERIOR	SL	SLIDER
FX	FIXED	STL	STEEL
HC	HOLLOW CORE	SWG	SWING
HM	HOLLOW METAL	TG	TEMPERED GLASS
INT	INTERIOR	WD	WOOD
PC	POWDER COATED		

DOOR HARDWARE

1. MORTISE ENTRY WITH DEADBOLT.
2. PROVIDE CODE COMPLIANT HARDWARE FOR EXITING AND RATED DOORS.

Mark	Measurements		Material	Finish	Fire Rating	HARDWARE	Details			Notes
	Width	Height					Head	Jamb	Sill	
S101	26' 9"	11' 6"	ALUM	PC MATTE BLACK	-	PER MAKER	3 | AD.41; 9 | AD.41	10 | AD.40; 10 | AD.41	9 | AD.40	
S102	35' 3"	11' 6"	ALUM	PC MATTE BLACK	-	PER MAKER	3 | AD.41; 9 | AD.41	10 | AD.40; 10 | AD.41	9 | AD.40	
S103	14' 5"	11' 6"	ALUM	PC MATTE BLACK	-	PER MAKER	3 | AD.41; 9 | AD.41	10 | AD.40; 10 | AD.41	9 | AD.40	
S104	14' 8"	11' 6"	ALUM	PC MATTE BLACK	-	PER MAKER	3 | AD.41; 9 | AD.41	10 | AD.40; 10 | AD.41	9 | AD.40	
S105	18' 0"	11' 6"	ALUM	PC MATTE BLACK	-	PER MAKER	3 | AD.41; 9 | AD.41	10 | AD.40; 10 | AD.41	9 | AD.40	
S106	21' 9"	11' 6"	ALUM	PC MATTE BLACK	-	PER MAKER	3 | AD.41; 9 | AD.41	10 | AD.40; 10 | AD.41	9 | AD.40	
S107	21' 7"	11' 6"	ALUM	PC MATTE BLACK	-	PER MAKER	3 | AD.41; 9 | AD.41	10 | AD.40; 10 | AD.41	9 | AD.40	

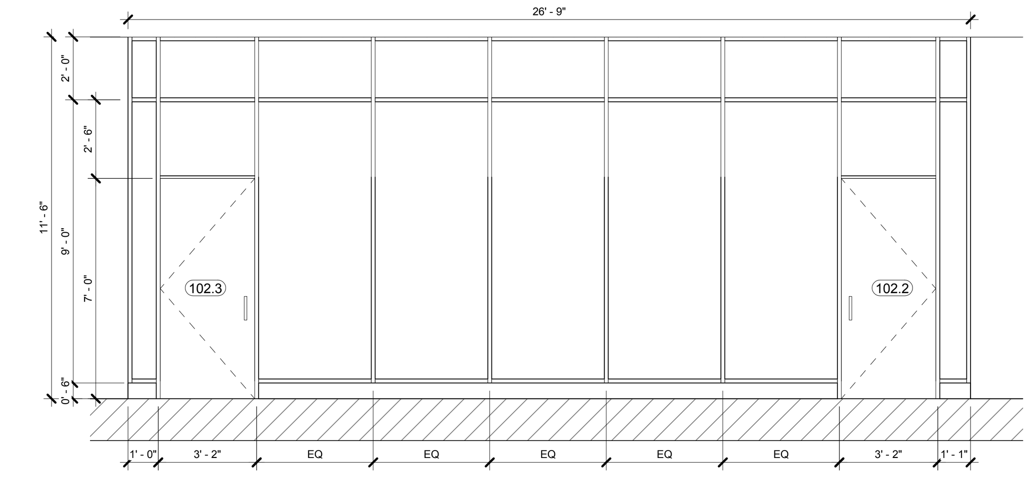

STOREFRONT S101

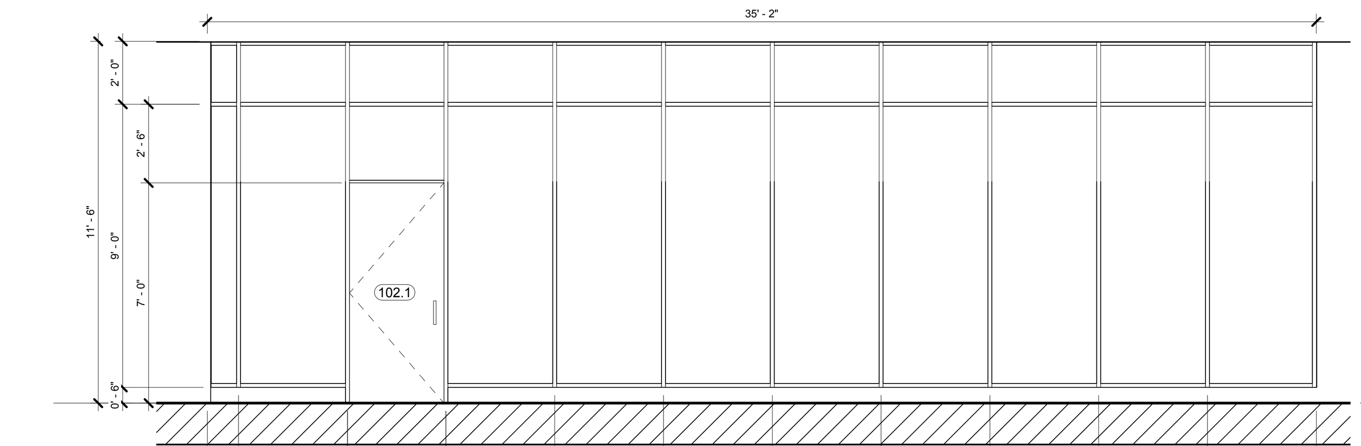

STOREFRONT S102

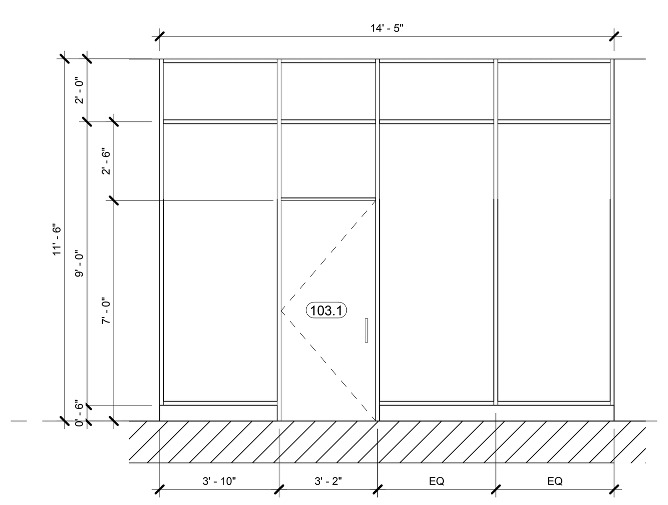

STOREFRONT S103

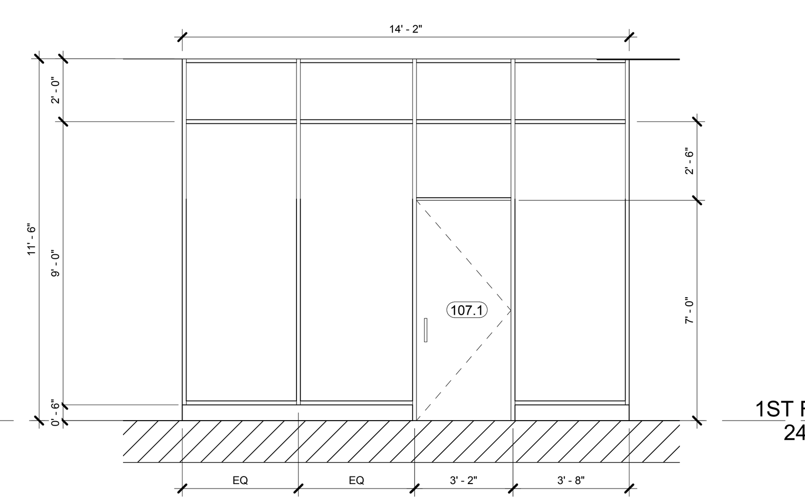

STOREFRONT S104

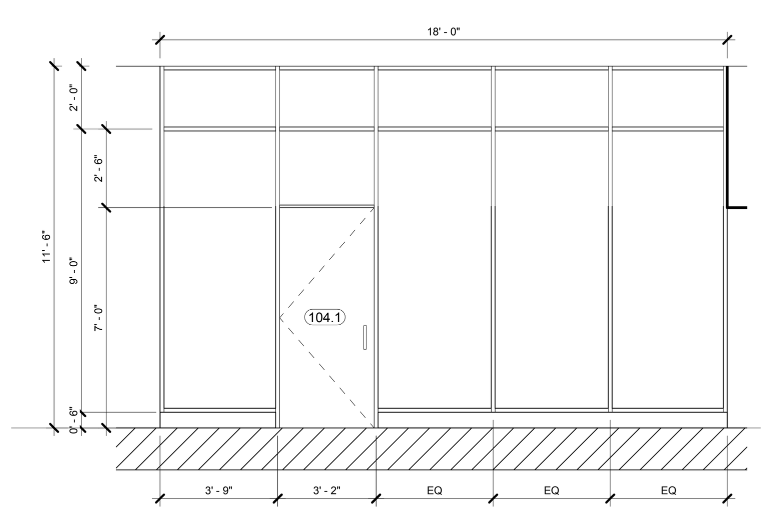

STOREFRONT S105

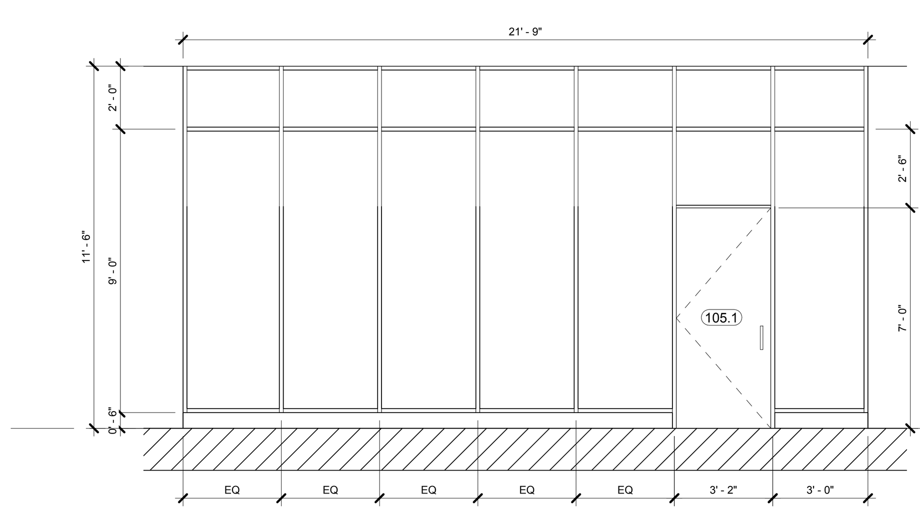

STOREFRONT S106

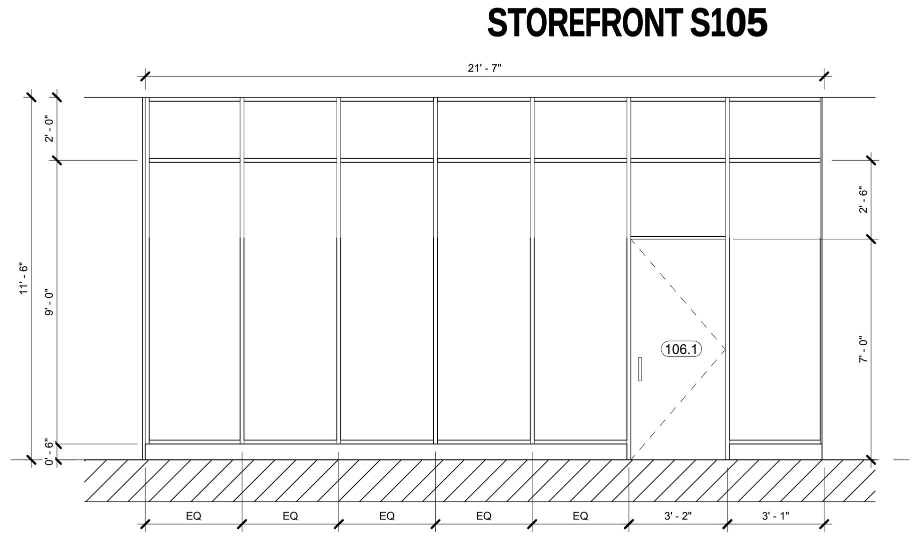

STOREFRONT S107

SCALE: 1/4" = 1'-0"

THE ABOVE DRAWINGS AND SPECIFICATIONS AND IDEAS, DESIGNS AND ARRANGEMENTS REPRESENTED THEREBY ARE AND SHALL REMAIN THE PROPERTY OF THE ARCHITECT AND NO PART THEREOF SHAL BE COPIED DISCLOSED TO OTHERS OR USED IN CONNECTION WITH ANY OTHER WORK OR PROJECT OTHER THAN THE SPECIFIC PROJECT FOR WHICH THEY HAVE BEEN PREPARED AND DEVELOPED, WITHOUT THE WRITTEN CONSENT OF THE ARCHITECT. VISUAL CONTACT WITH THESE DRAWINGS OR SPECIFICATIONS SHALL CONSTITUTE CONCLUSIVE EVIDENCE OF ACCEPTANCE OF THESE RESTRICTIONS.

NO.	REVISIONS	DATE
01	PLAN CHECK REVISIONS	06/06/2016

LICENSED ARCHITECT
STEPHEN M. ALBERT
NO. C 9412
REN. 5-31-13
STATE OF CALIFORNIA

1833 N. GAREY AVE.

1833 NORTH GAREY AVENUE
PAMONA, CALIFORNIA 91767

DOOR, WINDOW & STOREFRONT SCHEDULES

the albert group architects
2032 Stoner Ave | Los Angeles, CA 90025 310.820.8863

C.U.P NUMBER:

PROJECT NUMBER: 14130

PROJECT STATUS: PLAN CHECK RESUBMITTAL

ISSUE DATE: 07/18/2016

SHEET NUMBER: A7.01

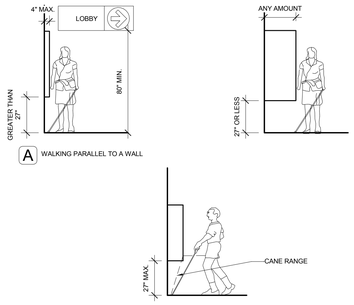

A WALKING PARALLEL TO A WALL

B WALKING PERPENDICULAR TO A WALL

PROTRUDING OBJECT CLEARANCES

SCALE: 1/4" = 1'-0"

12

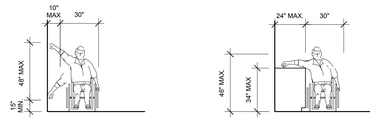

A HIGH AND LOW LIMITS

B OVER OBSTRUCTIONS

SIDE REACH EXTENTS

SCALE: 1/4" = 1'-0"

14

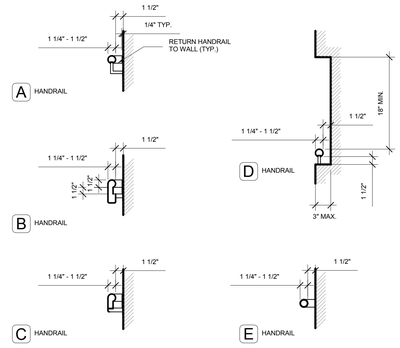

HANDRAILS

SCALE: 1" = 1'-0"

5

THE ABOVE DRAWINGS AND SPECIFICATIONS AND DESIGNS THEREIN ARE AND SHALL REMAIN THE PROPERTY OF THE ARCHITECT AND NO PART THEREOF SHALL BE CONVEYED TO OTHERS OR USED IN CONNECTION WITH ANY OTHER WORK OR PROJECT OTHER THAN THE SPECIFIC PROJECT FOR WHICH THEY HAVE BEEN PREPARED AND DEVELOPED, WITHOUT THE WRITTEN CONSENT OF THE ARCHITECT. VISUAL CONTACT WITH THESE DRAWINGS AND SPECIFICATIONS SHALL CONSTITUTE CONCLUSIVE EVIDENCE OF ACCEPTANCE OF THESE RESTRICTIONS.

NO.	REVISIONS	DATE
01	PLAN CHECK REVISIONS	06/06/2016

LICENSED ARCHITECT
STEPHEN M. ALBERT
NO. C 9412
REN. 5-31-13
STATE OF CALIFORNIA

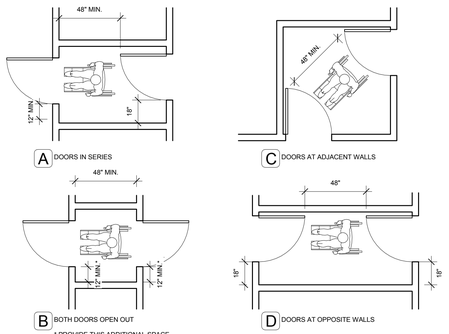

A DOORS IN SERIES

C DOORS AT ADJACENT WALLS

B BOTH DOORS OPEN OUT

* PROVIDE THIS ADDITIONAL SPACE IF DOOR IS EQUIPPED WITH BOTH A LATCH AND A CLOSER

D DOORS AT OPPOSITE WALLS

NOTE: DOORS SERVING OTHER THAN REQUIRED EXIT STAIRWAY

VESTIBULE CLEARANCES

SCALE: 1/4" = 1'-0"

11

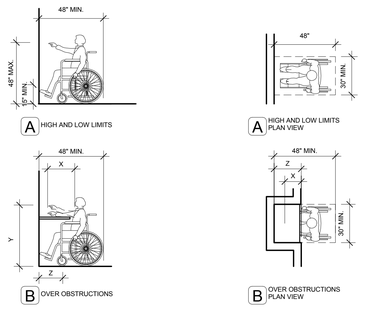

A HIGH AND LOW LIMITS

A HIGH AND LOW LIMITS PLAN VIEW

B OVER OBSTRUCTIONS

B OVER OBSTRUCTIONS PLAN VIEW

NOTE: X ≤ 25". Z ≥ X.
WHEN X < 20", THEN Y ≤ 48".
WHEN X = 20" - 25", THEN Y ≤ 44".

FORWARD REACH EXTENTS

SCALE: 1/4" = 1'-0"

13

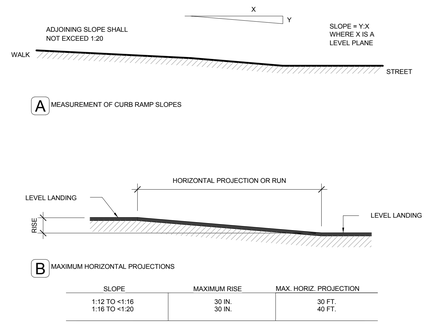

A MEASUREMENT OF CURB RAMP SLOPES

B MAXIMUM HORIZONTAL PROJECTIONS

SLOPE	MAXIMUM RISE	MAX. HORIZ. PROJECTION
1:12 TO <1:16	30 IN.	30 FT.
1:16 TO <1:20	30 IN.	40 FT.

RAMP SLOPES

SCALE: 1/4" = 1'-0"

6

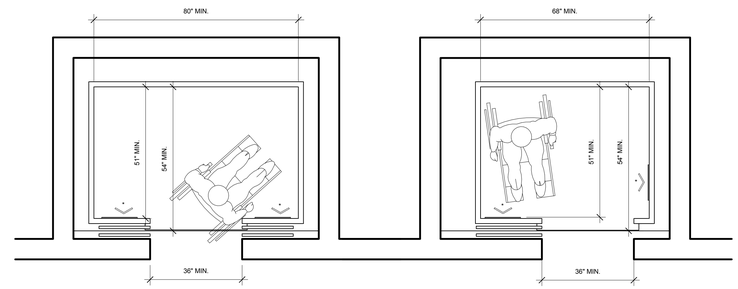

A PANEL LOCATIONS FOR CENTER OPENING DOOR

B MINIMUM DIMENSIONS OF CAR WITH SIDE OPENING DOOR

* INDICATES POSSIBLE PANEL LOCATIONS

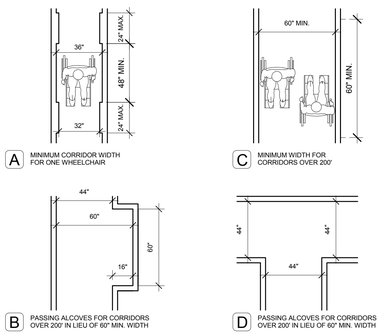

A MINIMUM CORRIDOR WIDTH FOR ONE WHEELCHAIR

C MINIMUM WIDTH FOR CORRIDORS OVER 200'

B PASSING ALCOVES FOR CORRIDORS OVER 200' IN LIEU OF 60" MIN. WIDTH

D PASSING ALCOVES FOR CORRIDORS OVER 200' IN LIEU OF 60" MIN. WIDTH

CORRIDOR WIDTHS

SCALE: 1/4" = 1'-0"

10

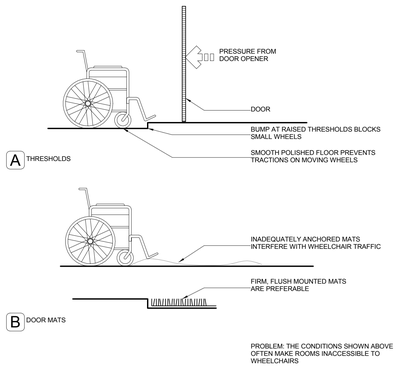

A THRESHOLDS

B DOOR MATS

PROBLEM: THE CONDITIONS SHOWN ABOVE OFTEN MAKE ROOMS INACCESSIBLE TO WHEELCHAIRS

WHEELCHAIR OBSTRUCTIONS

SCALE: 1/4" = 1'-0"

2

A STRAIGHT RAMPS

B RAMP WITH TURNING PLATFORM

C RAMP WITH SWITCHBACK PLATFORM

D RAMPS LANDING AT DOORWAYS

NOTE 1:
WHEN NO DOOR SWINGS ONTO LANDING - 60" MIN. WHEN DOOR SWINGS ON TO LANDING - 42" MIN PLUS DOOR WIDTH

NOTE 2:
MAXIMUM HORIZONTAL DISTANCE OF EACH RAMP AND RUN VARY

RAMPS

SCALE: 1/4" = 1'-0"

4

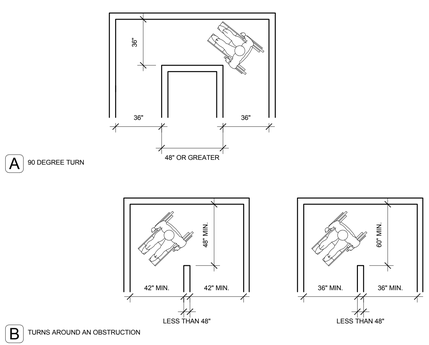

A 90 DEGREE TURN

B TURNS AROUND AN OBSTRUCTION

TURNAROUNDS

SCALE: 1/4" = 1'-0"

9

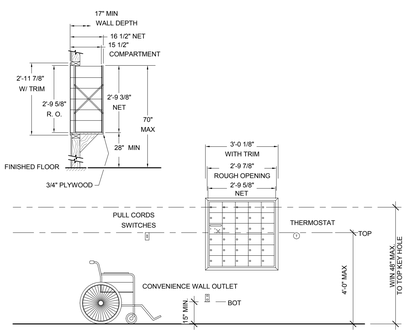

ACCESSIBLE MOUNTING HEIGHTS

SCALE: 1/4" = 1'-0"

3

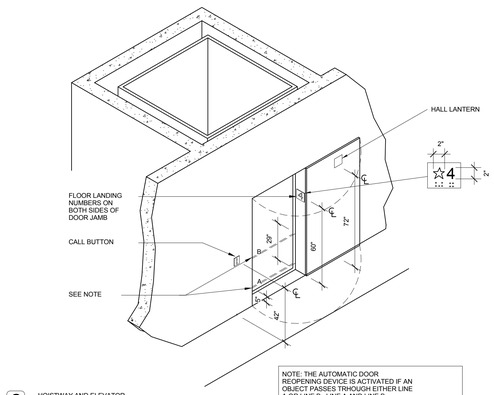

C HOISTWAY AND ELEVATOR ENTRANCES

NOTE: THE AUTOMATIC DOOR REOPENING DEVICE IS ACTIVATED IF AN OBJECT PASSES THROUGH EITHER LINE A OR LINE B. LINE A AND LINE B REPRESENT THE VERTICAL LOCATIONS OF THE DOOR REOPENING DEVICE NOT REQUIRING CONTACT.

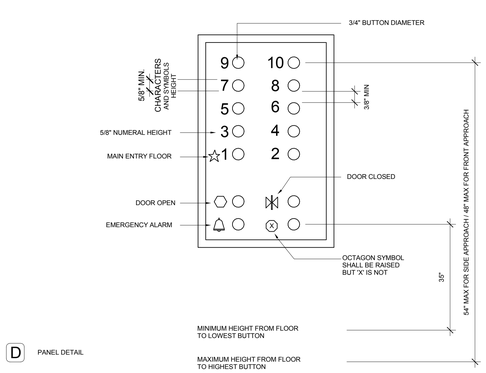

D PANEL DETAIL

ELEVATORS

SCALE: 1/4" = 1'-0"

1

1833 N. GAREY AVE.

1833 NORTH GAREY AVENUE
PAMONA, CALIFORNIA 91767

ACCESSIBILITY DETAILS

the albert group architects
24312 Steiner Ave | Los Angeles, CA 91123 310.820.8555

C.U.P NUMBER:

PROJECT NUMBER: 14130

PROJECT STATUS: PLAN CHECK RESUBMITTAL

ISSUE DATE: 07/18/2016

SHEET NUMBER: ACC.1

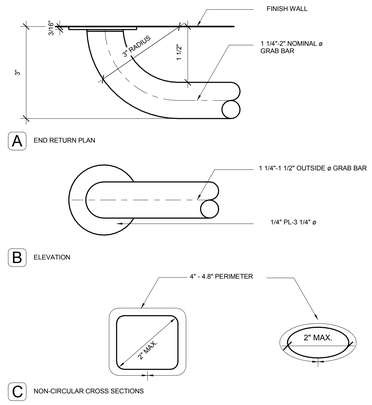

GRAB BAR DETAIL

SCALE: 6" = 1'-0"

5

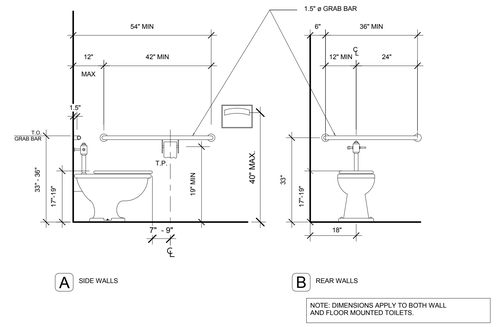

TOILET MOUNTING DIMENSIONS

SCALE: 1/2" = 1'-0"

9

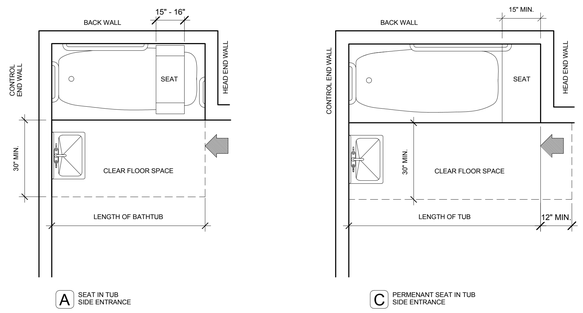

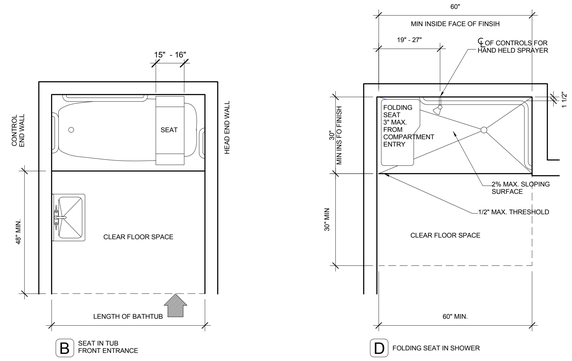

TUB AND SHOWER CLEARANCES

SCALE: 1/2" = 1'-0"

10

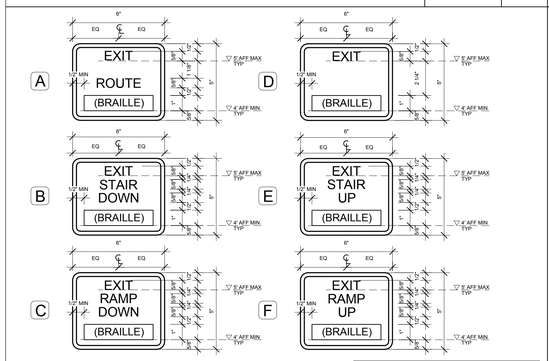

TACTILE EXIT SIGNS

SCALE: 3" = 1'-0"

7

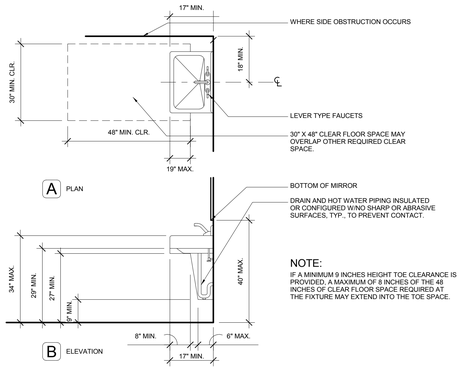

SINK CLEARANCES

SCALE: 1/2" = 1'-0"

6

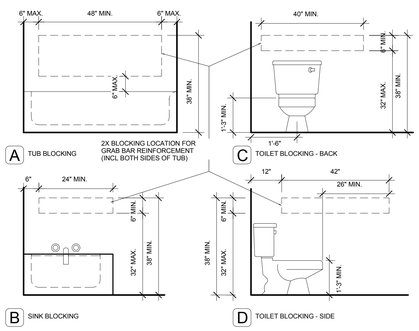

GRAB BAR BLOCKING

SCALE: 1/2" = 1'-0"

4

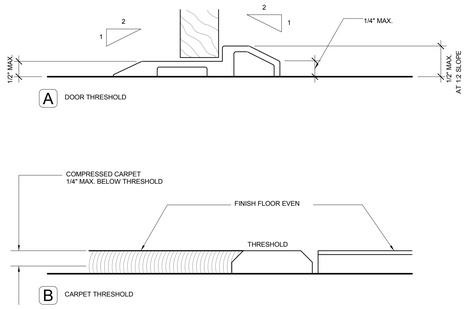

THRESHOLDS

SCALE: 6" = 1'-0"

8

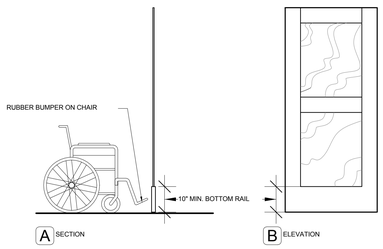

DOOR CONSTRUCTION

SCALE: 1/2" = 1'-0"

2

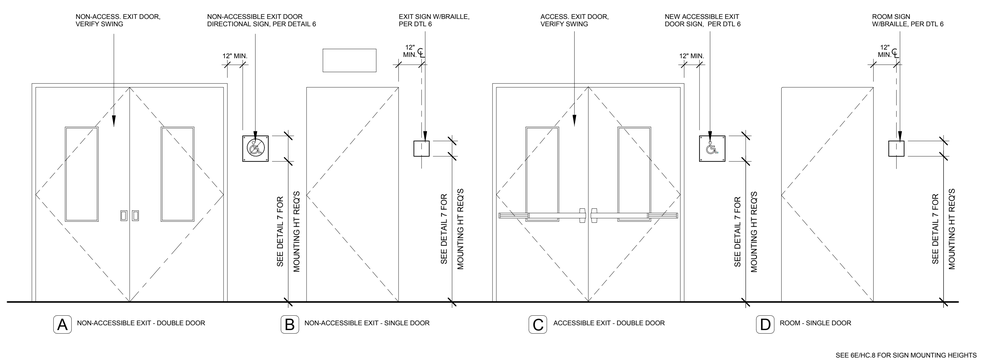

EXIT DOOR SIGNAGE MOUNTING HEIGHT

SCALE: 1/2" = 1'-0"

3

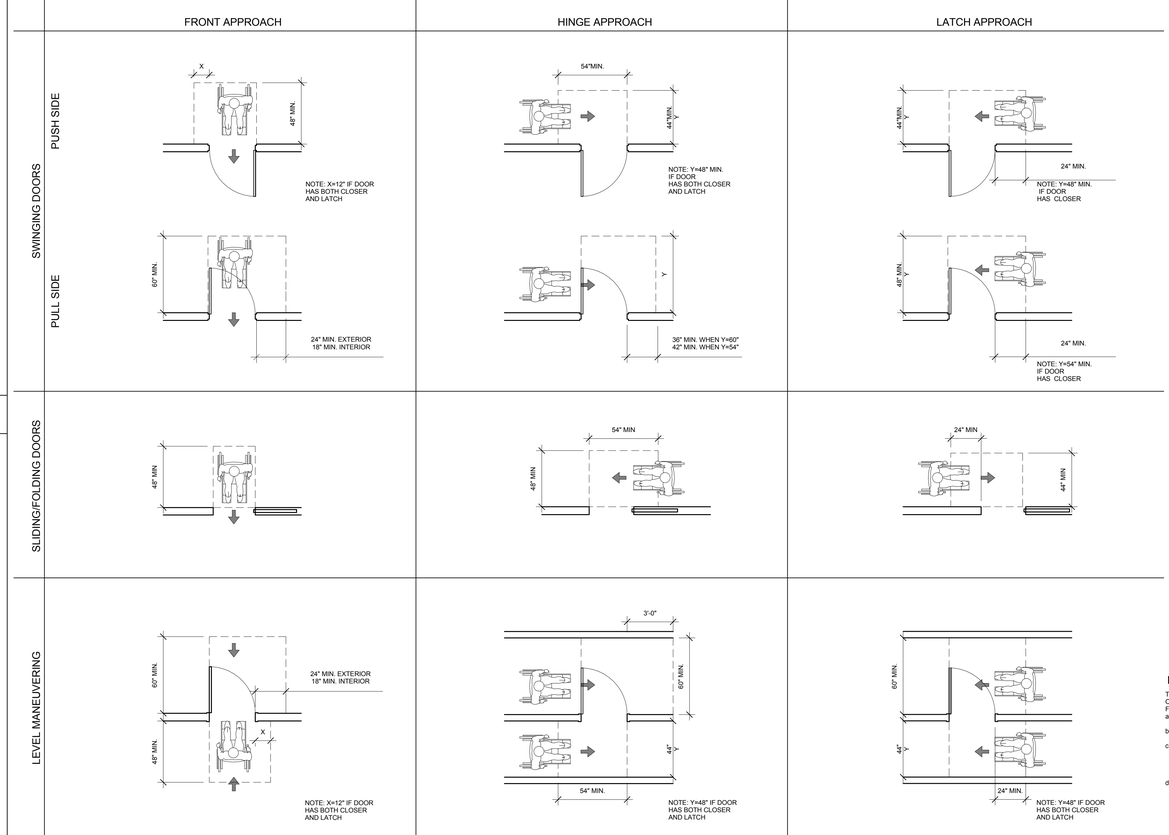

NOTE:

THE FORCE FOR PUSHING OR PULLING OPEN A DOOR OR GATE OTHER THAN FIRE DOORS SHALL BE AS FOLLOW:

a. INTERIOR HINGED DOORS AND GATES: 5 POUNDS MAXIMUM
b. SLIDING OR FOLDING DOORS: 5 POUNDS MAXIMUM
c. REQUIRED FIRE DOORS: THE MINIMUM OPENING FORCE ALLOWABLE BY THE APPROPIATE ADMINISTRATIVE AUTHORITY, NOT TO EXCEED 15 POUNDS
d. EXTERIOR HINGED DOORS: 5 POUNDS MAXIMUM

DOOR CLEARANCES

SCALE: 1/4" = 1'-0"

1

THE ABOVE DRAWINGS AND SPECIFICATIONS AND IDEAS, DESIGNS, ARRANGEMENTS AND REPRESENTATIONS THEREIN ARE AND SHALL REMAIN THE PROPERTY OF THE ARCHITECT AND NO PART THEREOF SHALL BE CONVEYED OR DISCLOSED OR USED IN CONNECTION WITH ANY OTHER WORK OR PROJECT OTHER THAN THE SPECIFIC PROJECT FOR WHICH THEY HAVE BEEN PREPARED AND DEVELOPED, WITHOUT THE WRITTEN CONSENT OF THE ARCHITECT. VISUAL CONTACT WITH THESE DRAWINGS OR SPECIFICATIONS SHALL CONSTITUTE CONCLUSIVE EVIDENCE OF ACCEPTANCE OF THESE RESTRICTIONS.

NO.	REVISIONS	DATE
01	PLAN CHECK REVISIONS	06/06/2016

LICENSED ARCHITECT
STEPHEN M. ALBERT
NO. C 9412
REN. 5-31-13
STATE OF CALIFORNIA

1833 N. GAREY AVE.

1833 NORTH GAREY AVENUE
PAMONA, CALIFORNIA 91767

ACCESIBILITY DETAILS

the albert group architects
24352 Skyline Ave | Los Angeles, CA 91023 310.919.8555

C.U.P NUMBER:

PROJECT NUMBER: 14130

PROJECT STATUS: PLAN CHECK RESUBMITTAL

ISSUE DATE: 07/18/2016

SHEET NUMBER: ACC.2

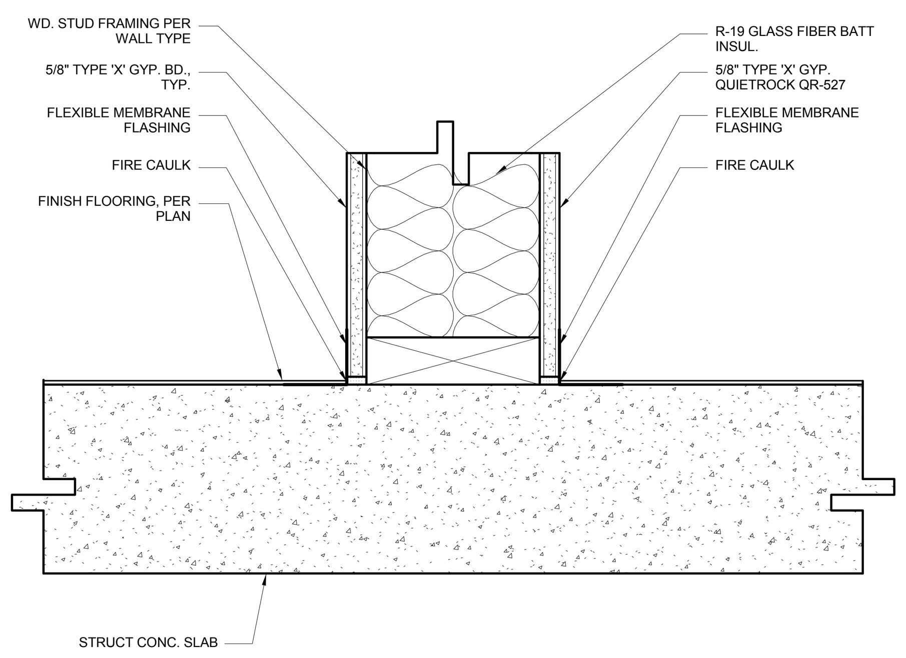

3-HR CONC. FLOOR/CLG @ 1-HR INT. WALL
SCALE: 3" = 1'-0" | 13

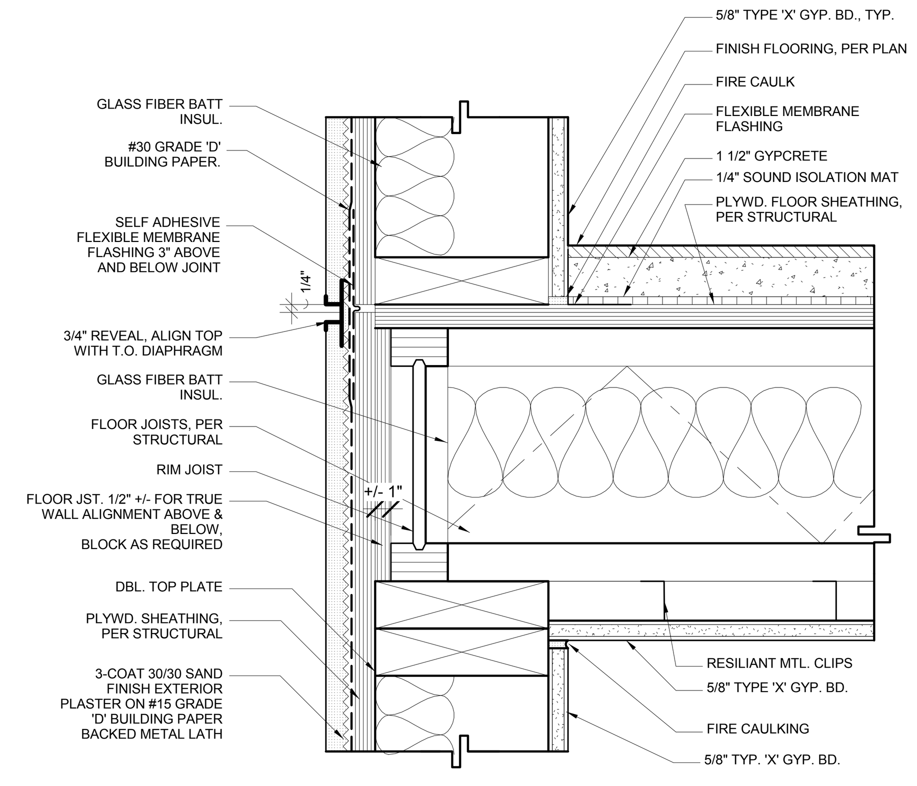

UL DESIGN NO: UL-L532

UPPER FLOOR @ EXT WALL
SCALE: 3" = 1'-0" | 9

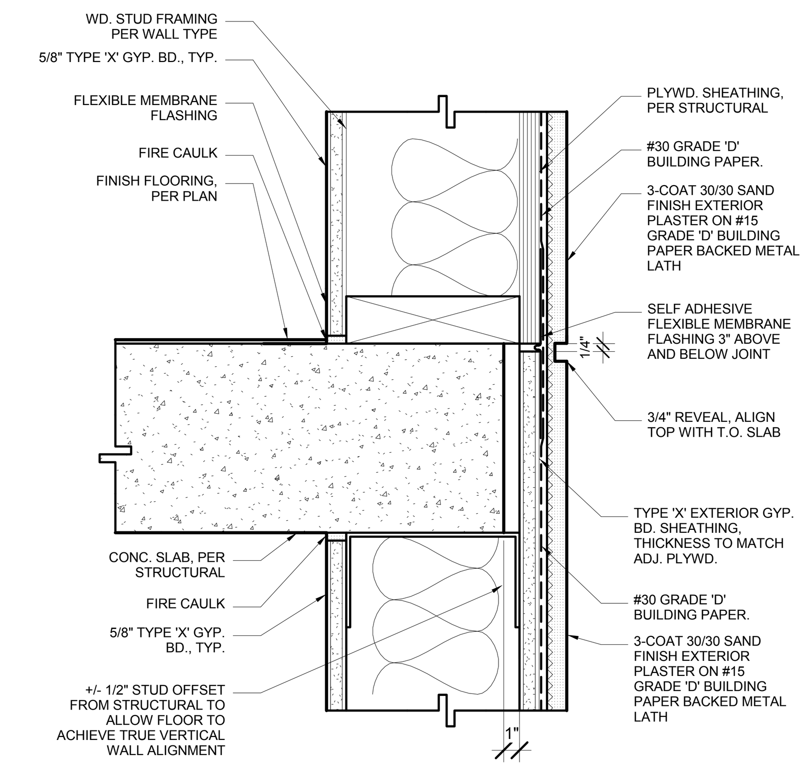

2ND FLOOR @ EXTERIOR WALL
SCALE: 3" = 1'-0" | 5

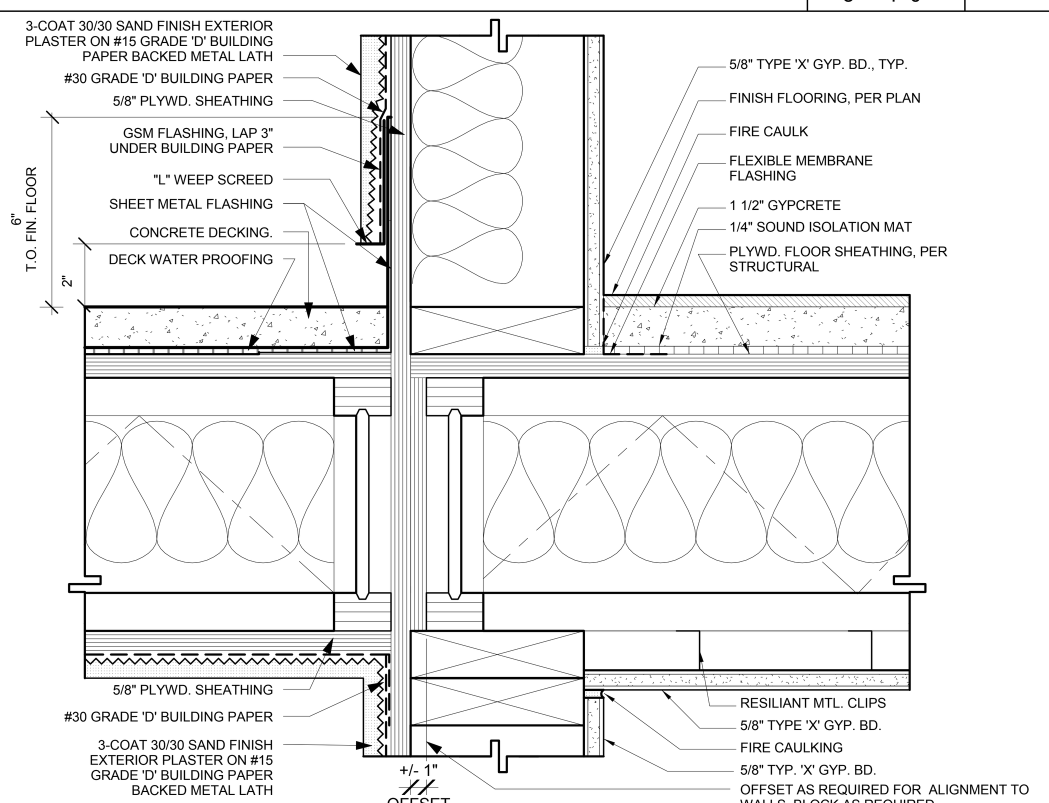

UPPER FLOOR @ COURTYARD OR CORRIDOR WALL
SCALE: 3" = 1'-0" | 12

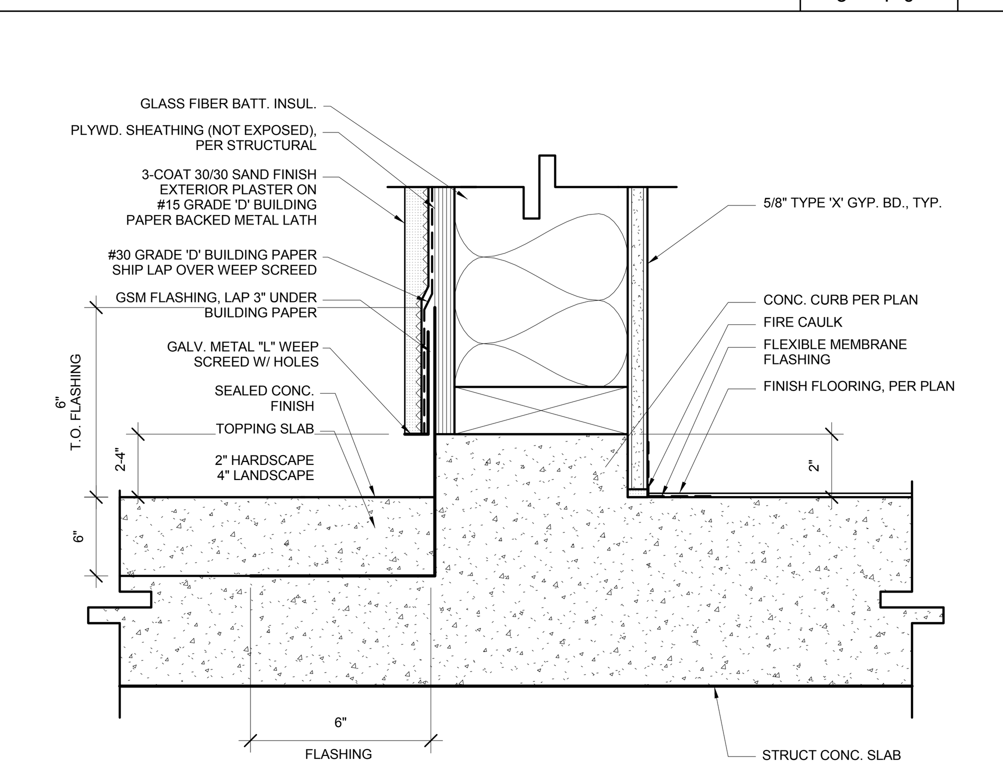

PODIUM DECK @ EXTERIOR WALL
SCALE: 3" = 1'-0" | 8

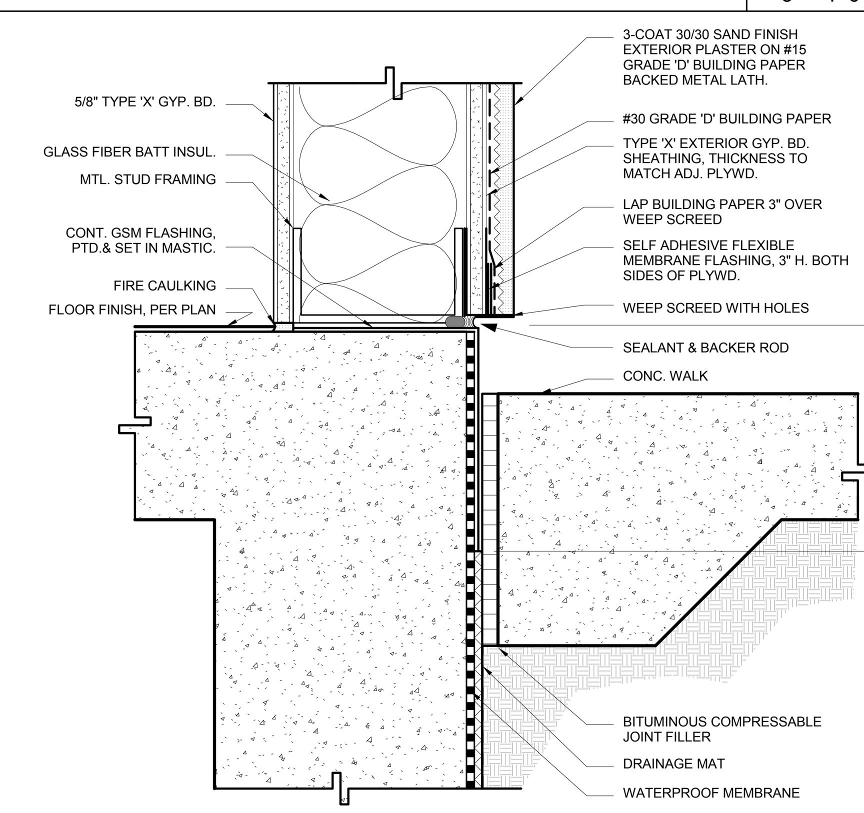

EXTERIOR WALL @ CONCRETE SLAB
SCALE: 3" = 1'-0" | 4

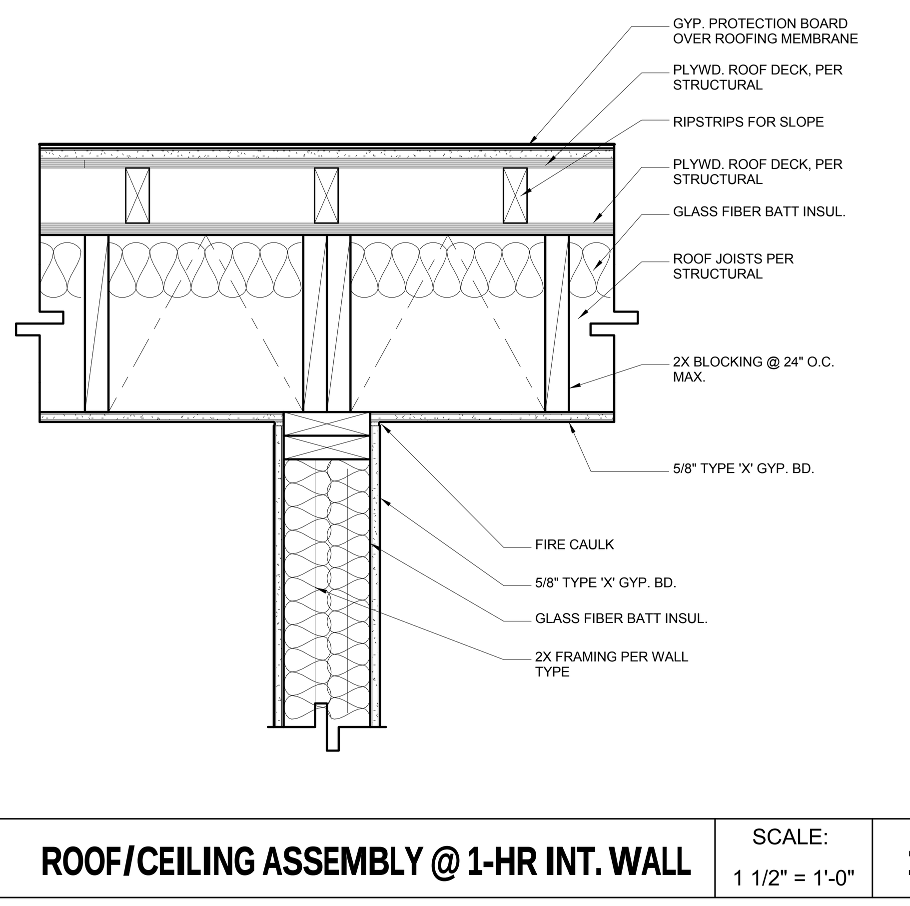

ROOF/CEILING ASSEMBLY @ 1-HR INT. WALL
SCALE: 1 1/2" = 1'-0" | 11

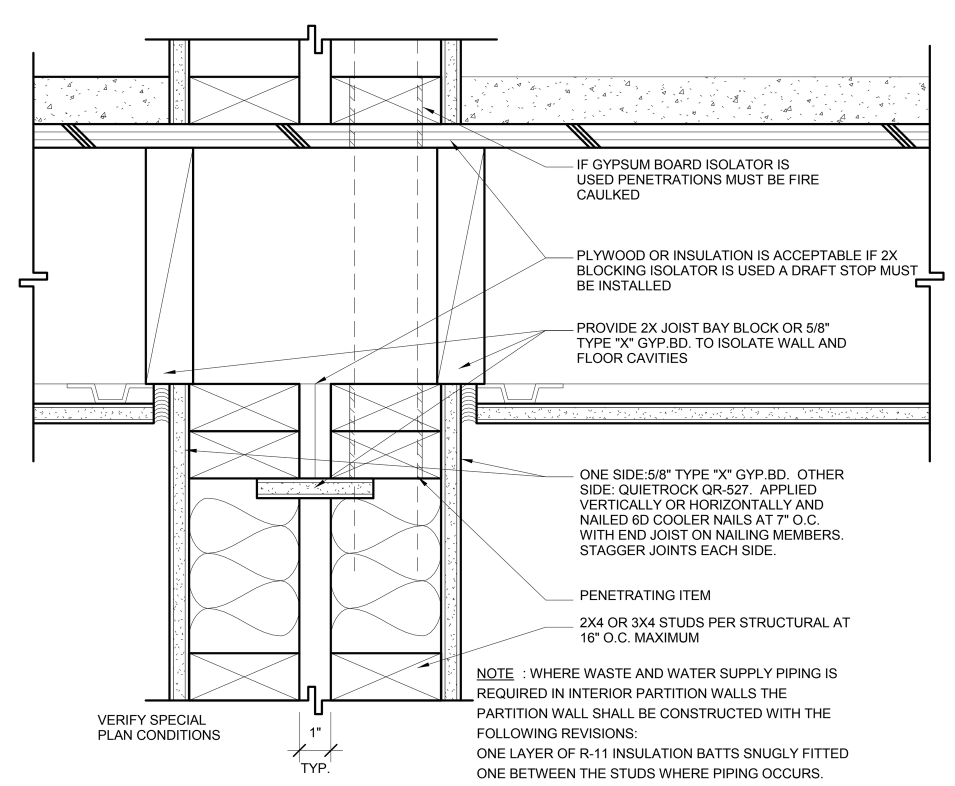

NOTE : WHERE WASTE AND WATER SUPPLY PIPING IS REQUIRED IN INTERIOR PARTITION WALLS THE PARTITION WALL SHALL BE CONSTRUCTED WITH THE FOLLOWING REVISIONS:
ONE LAYER OF R-11 INSULATION BATTS SNUGLY FITTED ONE BETWEEN THE STUDS WHERE PIPING OCCURS.

DBL FRAME INTERIOR WALL
SCALE: 3" = 1'-0" | 7

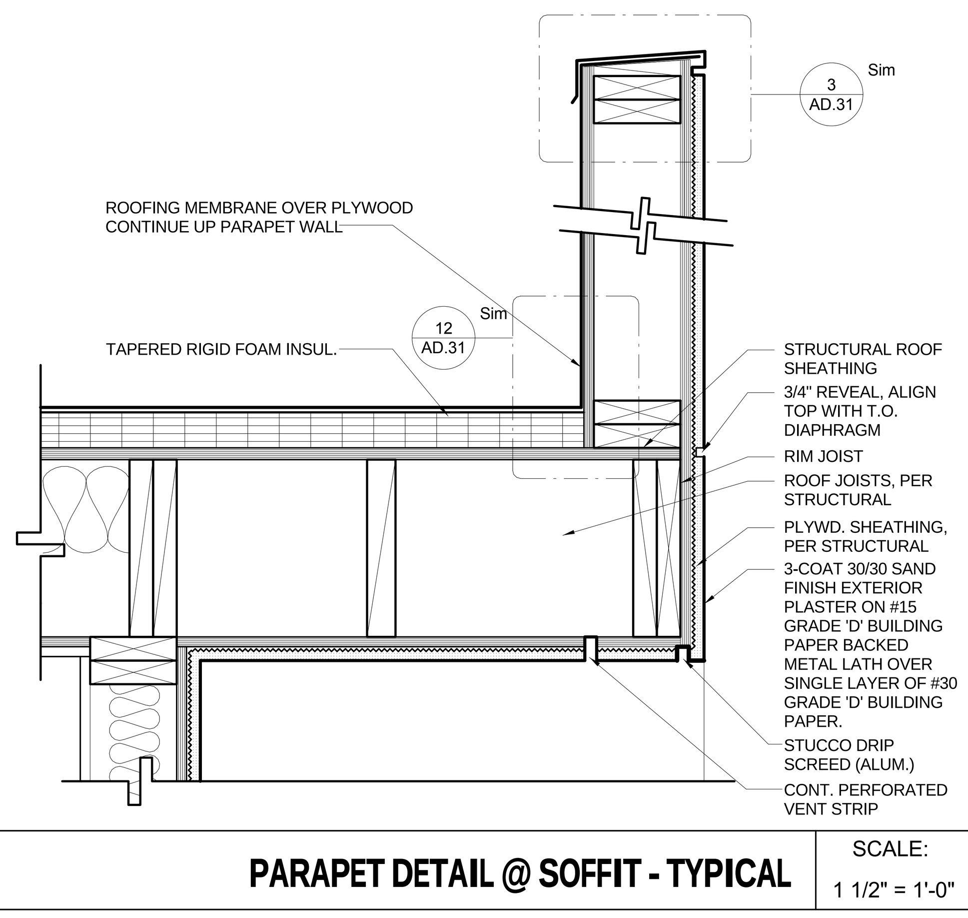

PARAPET DETAIL @ SOFFIT - TYPICAL
SCALE: 1 1/2" = 1'-0" | 3

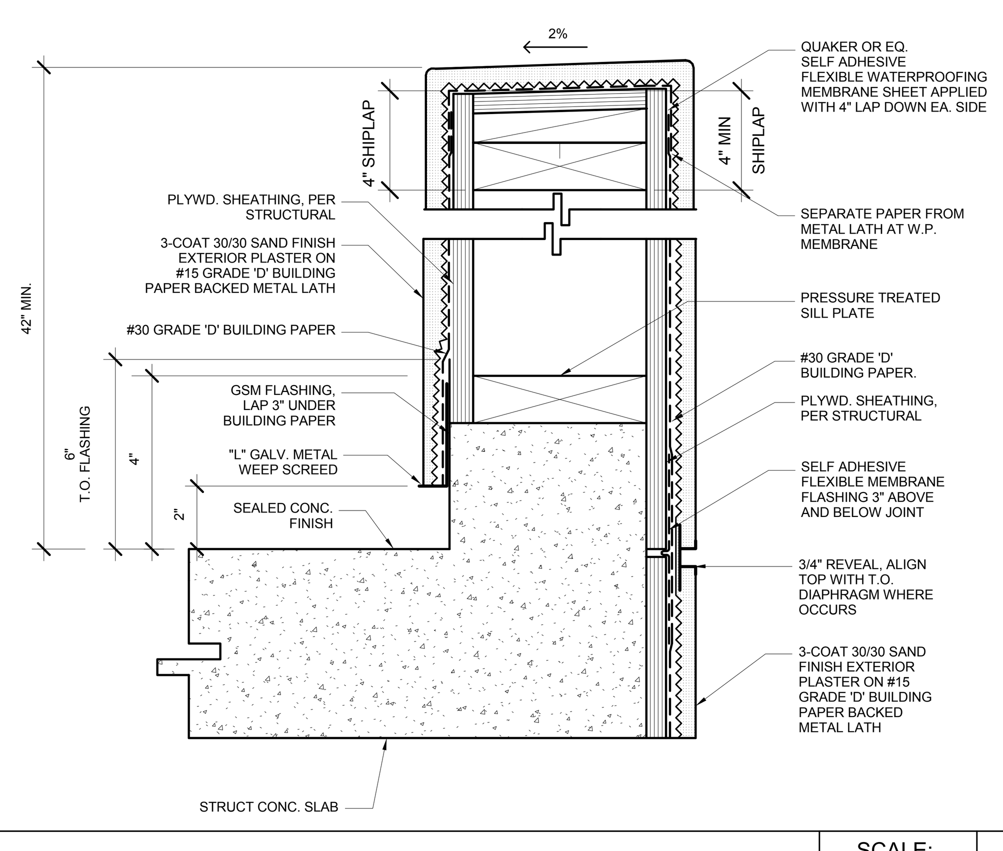

EXTERIOR GUARDWALL - TYPICAL
SCALE: 3" = 1'-0" | 10

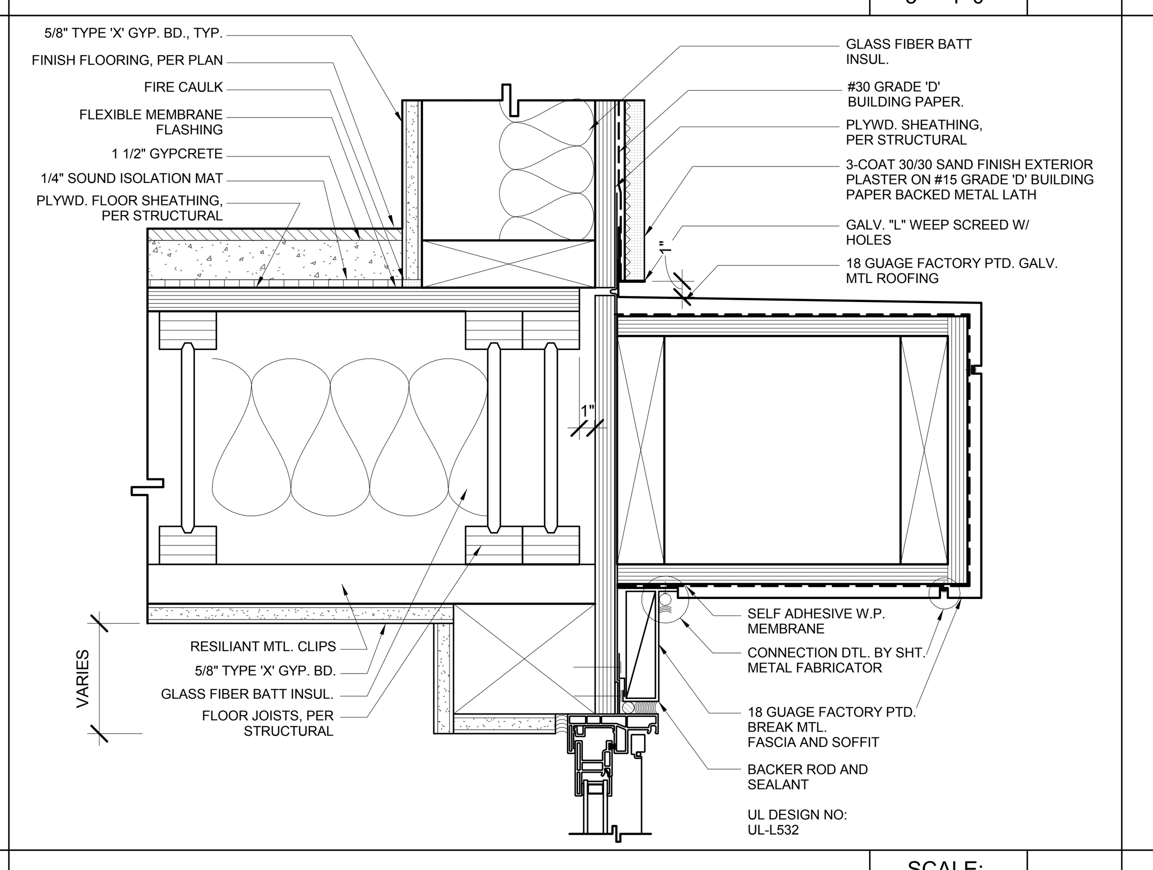

UPPER FLOOR @ EXT WALL W/ MTL CANOPY
SCALE: 3" = 1'-0" | 6

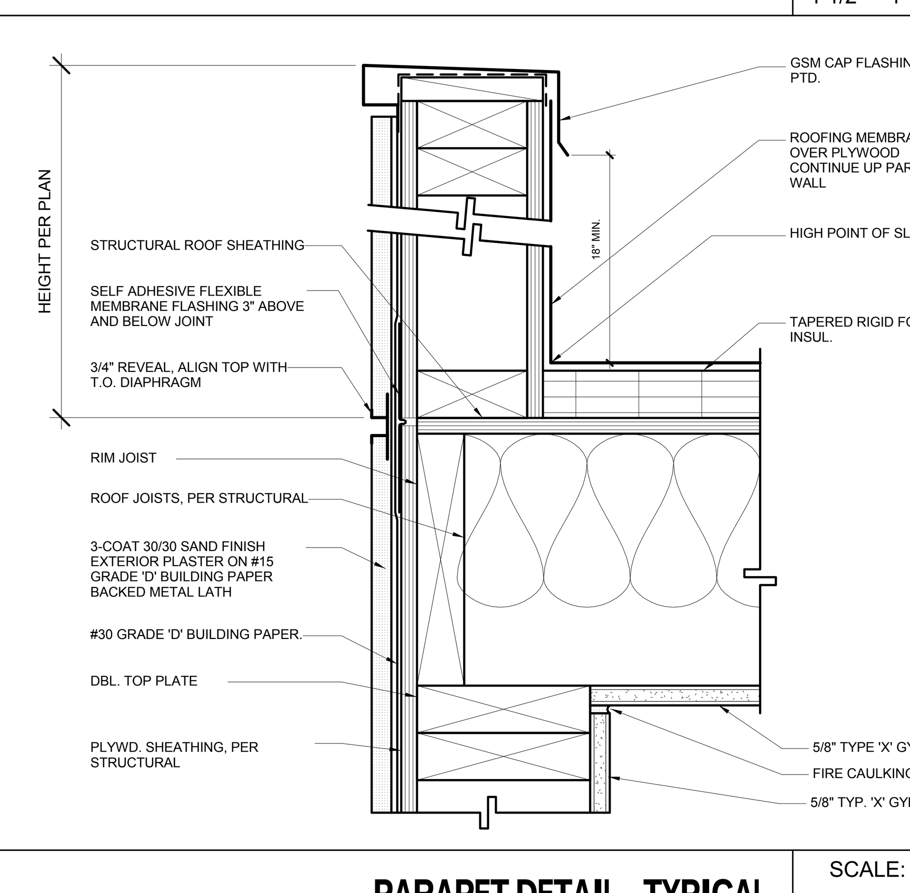

PARAPET DETAIL - TYPICAL
SCALE: 3" = 1'-0" | 2

A INTERIOR WOOD STUD PARTITION WALL

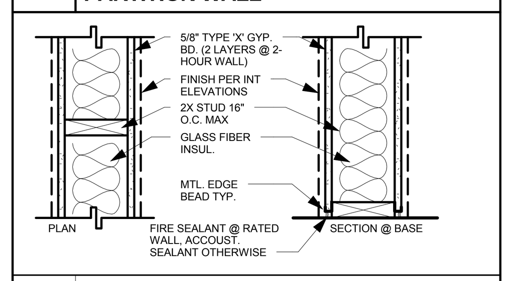

HR. RATED		A 2 X	A 4 X	A 6 X	A 8 X
	MARK	A 2 X	A 4 X	A 6 X	A 8 X
	STUD SIZE	2 1/2"	4"	6"	8"
0	BASIC PART. TH.	3 3/4"	5 1/4"	7 1/4"	9 1/4"
	STC	46	47	48	49
	INSUL. THICK	2"	3"	5 1/2"	5 1/2"
1 U305	BASIC PART. TH.	3 3/4"	5 1/4"	7 1/4"	9 1/4"
	STC	46	47	48	49
	INSUL. THICK	2"	3"	5 1/2"	5 1/2"
2 U301	BASIC PART. TH.	5"	6 1/2"	8 1/2"	10 1/2"
	STC	49	50	51	52
	INSUL. THICK	2"	3"	5 1/2"	5 1/2"

NOTES:
1. ALL GYP.BD. TYPE 'X' 5/8" THICK
2. STC ASSUMES GYP. BD. CONTINUES TO STRUCTURE TOP AND BOTTOM
3. INSULATION TO CONFORM TO ALL UL DESIGN REQUIREMENTS

B INTERIOR ACOUSTICAL PARTITION

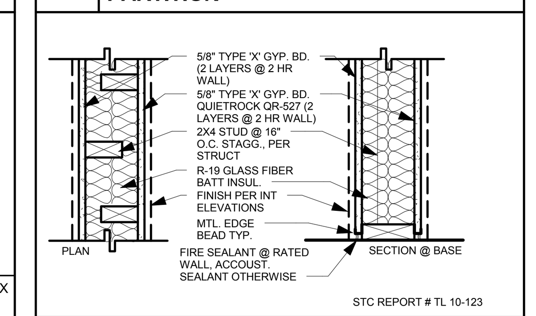

HR. RATED		
	MARK	B 6 X
	STUD SIZE	6"
1	BASIC PART. TH.	6 3/4"
	U.L. DESIGN	U305
	STC	57
	INSUL. THICK.	6 1/4"
2	BASIC PART. TH.	8"
	U.L. DESIGN	WP-360
	STC	60
	INSUL. THICK.	6 1/4"

NOTES:
1. ALL GYP.BD. TYPE 'X' 5/8" THICK
2. STC ASSUMES GYP. BD. CONTINUES TO STRUCTURE TOP AND BOTTOM
3. INSULATION TO CONFORM TO ALL UL DESIGN REQUIREMENTS

C POURED CONCRETE WALL

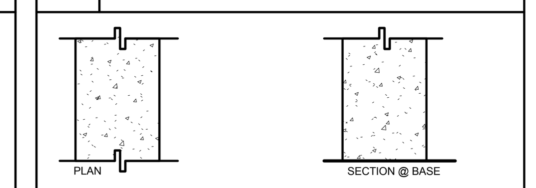

HR. RATED						
	MARK	C 6 X	C 8 X	C T X	C W X	C S X
	WALL SIZE	6"	8"	10"	12"	16"
	MARK	C E X	C Y X	C F X		
	WALL SIZE	18"	20"	24"		

NOTES
1. ALL POURED CONCRETE WALLS MIN. 3HR RATED, EXCEPT 6" WHICH IS 2 HR RATED.

M INTERIOR METAL STUD PARTITION WALL

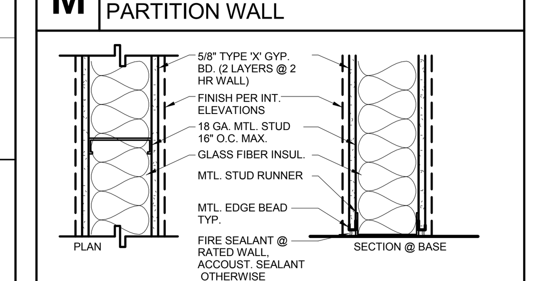

HR. RATED					
	MARK	M 2 X	M 4 X	M 6 X	M 8 X
	STUD SIZE	2 1/2"	4"	6"	8"
1	BASIC PART. TH.	3 3/4"	5 1/4"	7 1/4"	9 1/4"
	U.L. DESIGN	U425	U425	U425	U425
	STC	46	47	48	49
	INSUL. THICK.	2"	3"	5 1/2"	5 1/2"
2	BASIC PART. TH.	-	6 1/8"	-	-
	U.L. DESIGN	-	U412	-	-
	STC	-	50	-	-
	INSUL. THICK.	-	1 1/2"	-	-

NOTES
1. ALL GYP. BD. TYPE 'X' 5/8" THICK.
2. STC ASSUMES GYP. BD. CONTINUES TO STRUCTURE, TOP AND BOTTOM
3. INSULATION TO CONFORM TO UL DESIGN REQUIREMENTS

D DOUBLE FRAMED INTERIOR PARTITION

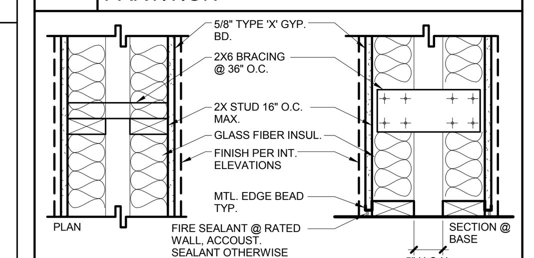

HR. RATED		
	MARK	D 4 X
	STUD SIZE	4"
0	BASIC PART. TH.	14 1/4"
	STC	57
	INSUL. THICK.	3"
1	BASIC PART. TH.	
	U.L. DESIGN	U305
	STC	48
	INSUL. THICK.	

NOTES
1. ALL GYP. BD. TYPE 'X' 5/8" THICK.
2. STC ASSUMES GYP. BD. CONTINUES TO STRUCTURE, TOP AND BOTTOM
3. INSULATION TO CONFORM TO UL DESIGN REQUIREMENTS
4. MAX. THICKNESS FOR 1HR. WALL IS 9 1/2" W/ 3" AIRSPACE

F INTERIOR SINGLE SIDE/ FURRING WALL

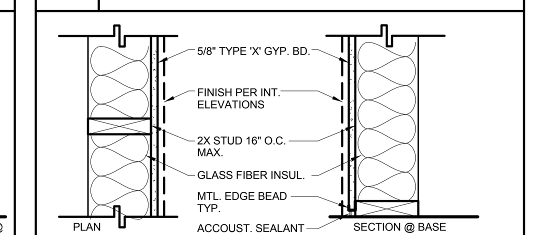

HR. RATED				
	MARK	F 3 X	F 4 X	F 6 X
	STUD SIZE	3"	4"	6"
0	BASIC PART. TH.	3 1/8"	4 1/8"	6 1/8"
	STC	-	-	-
	INSUL. THICK.	-	-	-

NOTES
1. ALL GYP. BD. TYPE 'X' 5/8" THICK.

V EXTERIOR ACOUSTICAL WALL

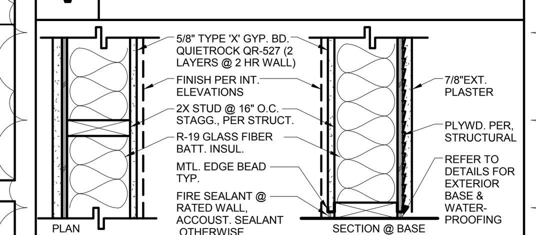

HR. RATED			
	MARK	V 6 X	V 8 X
	STUD SIZE	6"	8"
1 U305	BASIC PART. TH.	7 5/8"	9 5/8"
	STC	50	50
	INSUL. THICK.	5 1/2"	5 1/2"
2 U301	BASIC PART. TH.	8 7/8"	10 7/8"
	STC	50	50
	INSUL. THICK.	5 1/2"	5 1/2"

NOTES
1. ALL GYP. BD. TYPE 'X' 5/8" THICK.

N CMU BLOCK WALL

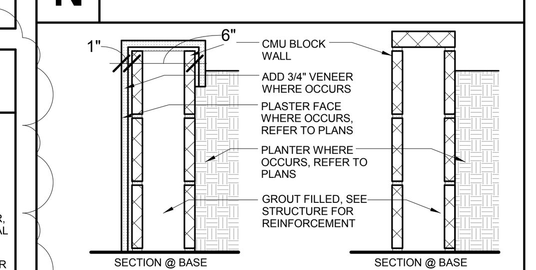

HR. RATED				
	MARK	N 4 2	N 6 2	N 8 2
	BLOCK SIZE	4"	6"	8"
2	BASIC PART. TH.	4"	6"	8"
	STC	-	-	-
	INSUL. THICK.	-	-	-

NOTES
1. ALL CMU WALLS MIN. 2 HR. RATED.

S SHAFT WALL

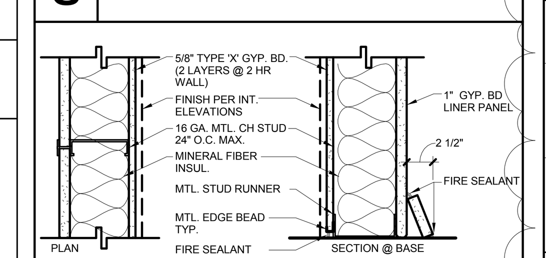

HR. RATED		
	MARK	S 2 X
	STUD SIZE	2 1/2"
1	BASIC PART. TH.	3 1/8"
	U.L. DESIGN	U415
	STC	-
	INSUL. THICK.	1"
2	BASIC PART. TH.	4 3/4"
	U.L. DESIGN	R1319
	STC	50
	INSUL. THICK.	1"

NOTES
1. ALL GYP. BD. TYPE 'X' 5/8" THICK.
2. INSULATION R-13 U.N.O.

X EXTERIOR STUD WALL

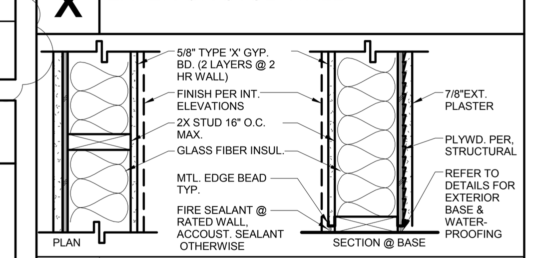

HR. RATED			
	MARK	X 6 X	X 8 X
	STUD SIZE	6"	8"
1 U305	BASIC PART. TH.	7 5/8"	9 5/8"
	STC	50	50
	INSUL. THICK.	5 1/2"	5 1/2"
2 U301	BASIC PART. TH.	8 7/8"	10 7/8"
	STC	50	50
	INSUL. THICK.	5 1/2"	5 1/2"

NOTES
1. ALL GYP. BD. TYPE 'X' 5/8" THICK.

Y EXTERIOR STUD WALL

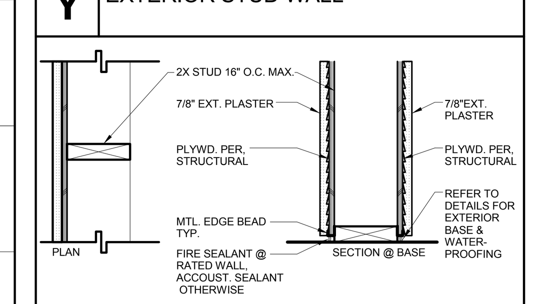

HR. RATED		
	MARK	Y 6 X
	STUD SIZE	6"
0	BASIC PART. TH.	7 5/8"
	STC	-
	INSUL. THICK.	5 1/2"

NOTES

Z EXTERIOR METAL STUD WALL WALL

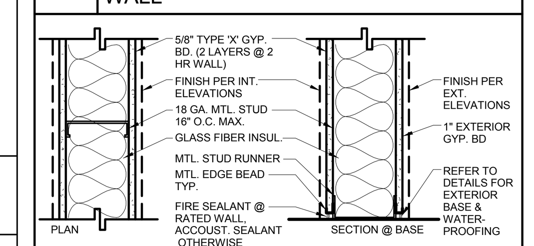

HR. RATED		
	MARK	X 6 X
	STUD SIZE	6"
1 U465	BASIC PART. TH.	7 5/8"
	INSUL. THICK.	5 1/2"
2 U411	BASIC PART. TH.	8 7/8"
	INSUL. THICK.	5 1/2"

NOTES
1. ALL GYP. BD. TYPE 'X' 5/8" THICK.

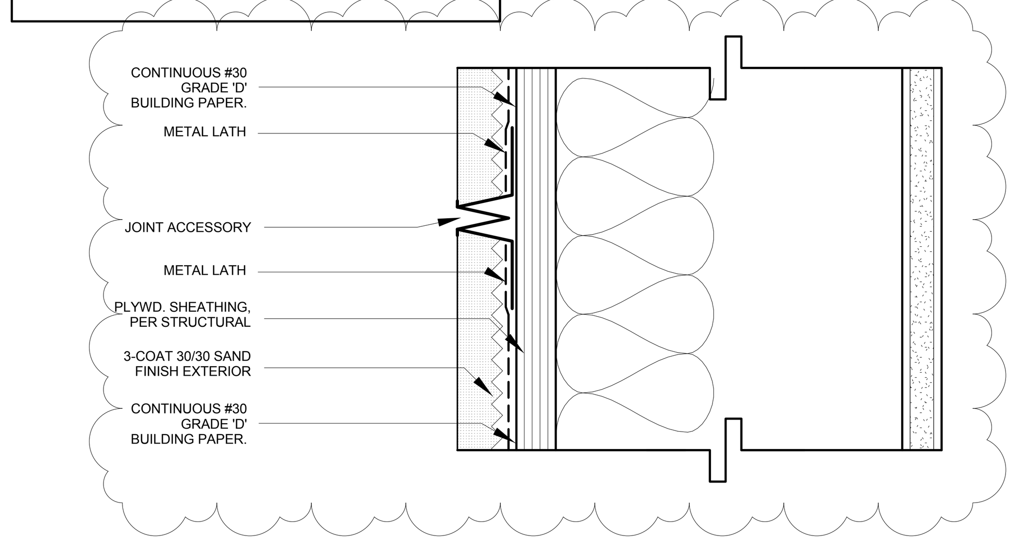

WALL TYPES
SCALE: 1" = 1'-0" | 1

THE ABOVE DRAWINGS AND SPECIFICATIONS AND IDEAS, DESIGNS AND ARRANGEMENTS REPRESENTED THEREBY ARE AND SHALL REMAIN THE PROPERTY OF THE ARCHITECT AND NO PART THEREOF SHAL BE COPIED DISCLOSED TO OTHERS OR USED IN CONNECTION WITH ANY OTHER WORK OR PROJECT OTHER THAN THE SPECIFIC PROJECT FOR WHICH THEY HAVE BEEN PREPARED AND DEVELOPED, WITHOUT THE WRITTEN CONSENT OF THE ARCHITECT. VISUAL CONTACT WITH THESE DRAWINGS OR SPECIFICATIONS SHALL CONSTITUTE CONCLUSIVE EVIDENCE OF ACCEPTANCE OF THESE RESTRICTIONS.

NO.	REVISIONS	DATE
01	PLAN CHECK REVISIONS	06/06/2016

LICENSED ARCHITECT
STEPHEN M. ALBERT
NO. C 9412
REN. 5-31-13
STATE OF CALIFORNIA

1833 N. GAREY AVE.
1833 NORTH GAREY AVENUE
PAMONA, CALIFORNIA 91767

ARCHITECTURAL DETAILS - WALLS

the albert group architects
2032 Stoner Ave | Los Angeles, CA 90025 310.820.8863

C.U.P NUMBER:

PROJECT NUMBER: 14130

PROJECT STATUS: PLAN CHECK RESUBMITTAL

ISSUE DATE: 07/18/2016

SHEET NUMBER: AD.10

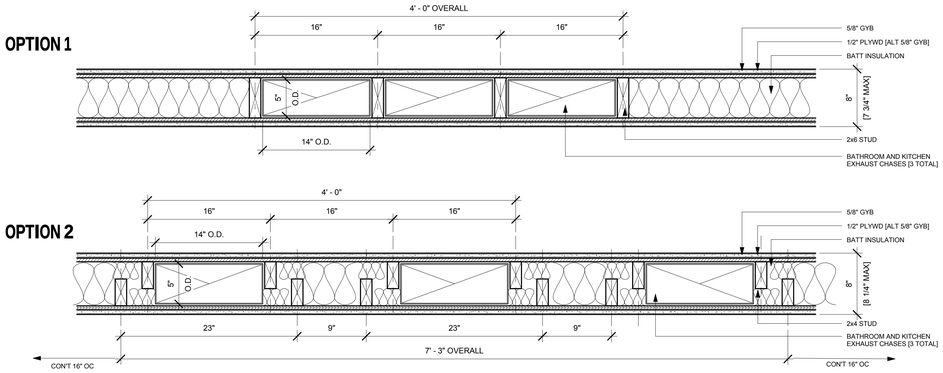

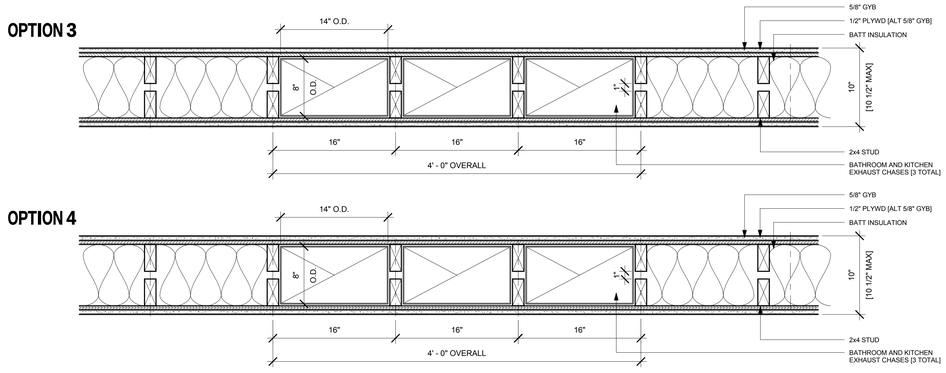

PARTITION WALL TYPE OPTIONS

SCALE: 1 1/2" = 1'-0" | 2

STC 50 - IIC 50 FIRE RATING AS SHOWN

FROM LADBS INFO. BULLETIN LABC 1207.6.1 DOC. NO: P/BC 2011-069

1. LT. WT. CONC. FILL (1 HR.)

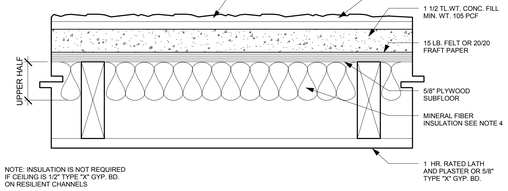

NOTE: INSULATION IS NOT REQUIRED IF CEILING IS 1/2" TYPE "X" GYP. BD. ON RESILIENT CHANNELS

2. DOUBLE WOOD FLOOR

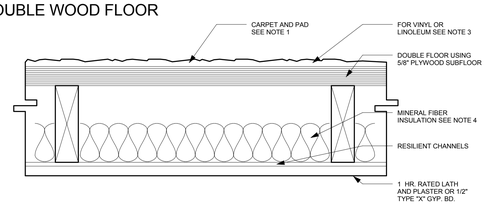

3. CONCRETE SLAB - NO CEILING (4 HR.)

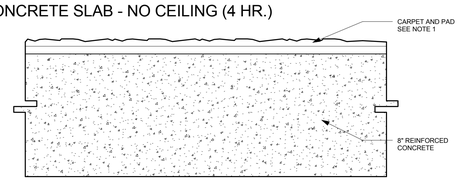

4. CONCRETE SLAB - WITH CEILING (2 HR.)

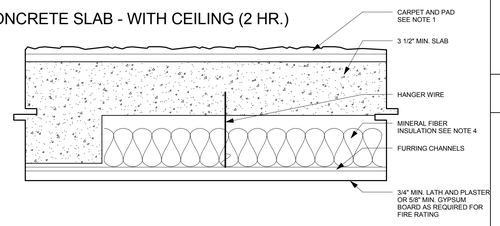

5. LT. WT. CONC. FILL (2 HR.)

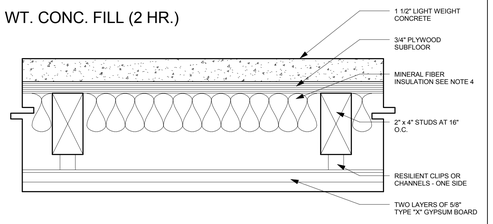

GENERAL NOTES

1. 13 oz. face wt. carpet (31 oz. tot) and 40 oz. jutted pad, or 48 oz. foam rubber, or 3/8" rebonded urethane foam (4 pcf), or 1/2" urethane foam (2.4 pcf).
2. Type and spacing of resilient channels and the attachment of channels and gypsum board or lath shall be as required for fire ratings.
3. Sheet vinyl and linoleum floor coverings with 1/8" minimum thickness resilient backing may be substituted for carpet and padding in kitchen and bathroom areas, if ceilings are on resilient channels.
4. The mineral fiber insulation shall have a thermal resistance R value of 11 or greater as determined by Federal Specification HH-I-521E.

STD SOUND RATED FLOOR CEILING ASSEMBLIES

SCALE: 3" = 1'-0" | 8

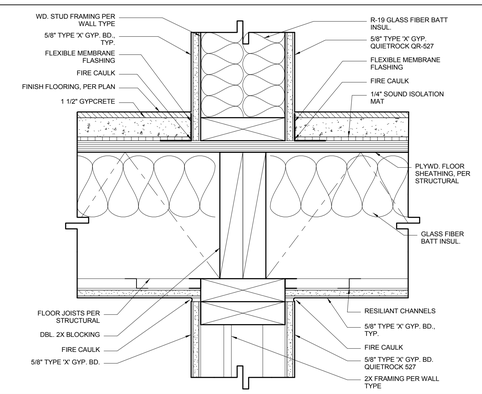

FLOOR/CEILING ASSEMBLY @ 1-HR INT. WALL

SCALE: 3" = 1'-0" | 7

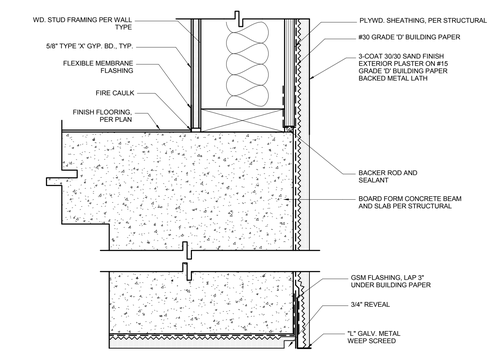

STUCCO TERMINATION @ EXT. CONCRETE WALLS

SCALE: 3" = 1'-0" | 6

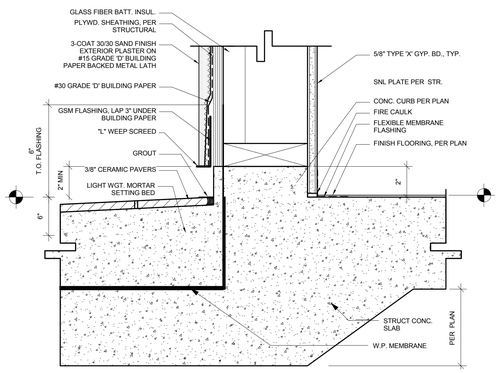

MEMBRANE & TILE PAVERS

SCALE: 3" = 1'-0" | 5

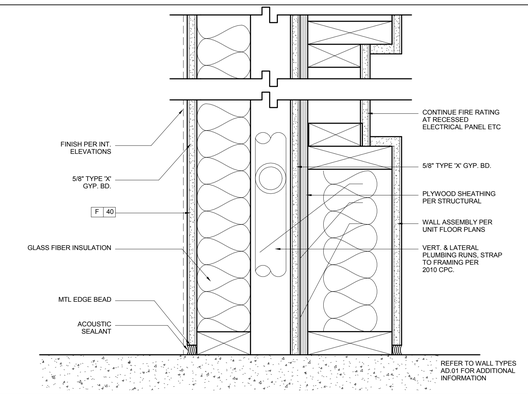

PLUMBING CHASE @ SHEAR WALL

SCALE: 3" = 1'-0" | 4

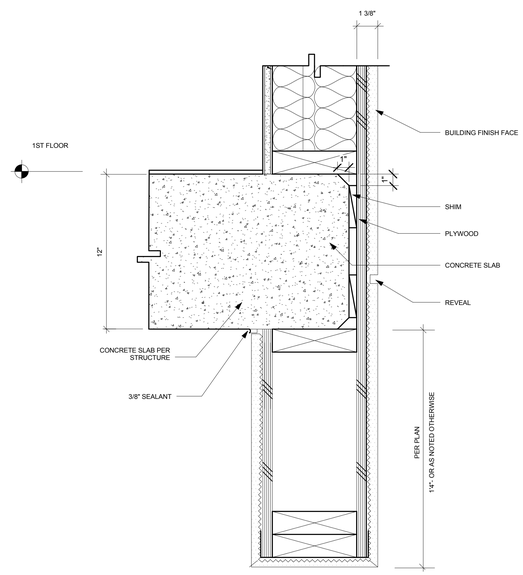

FIRE SHIELD

SCALE: 3" = 1'-0" | 3

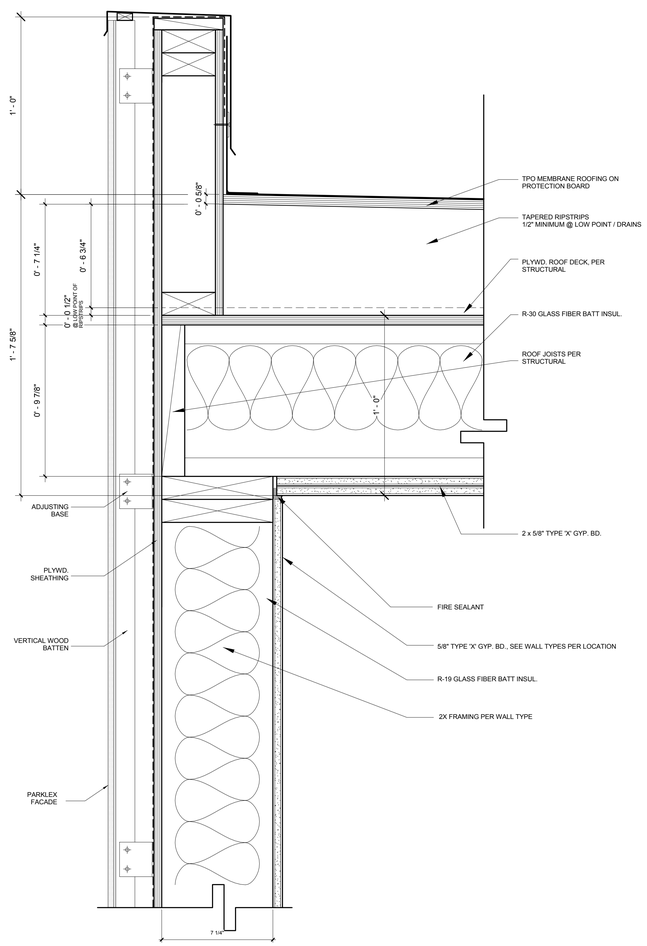

ROOF/CEILING ASSEMBLY @ PARAPET

SCALE: 3" = 1'-0" | 1

THE ABOVE DRAWINGS AND SPECIFICATIONS AND DESIGNS SHOWN THEREIN ARE AND SHALL REMAIN THE PROPERTY OF THE ARCHITECT AND NO PART THEREOF SHALL BE CONVEYED TO ANY OTHER PERSON OR USED IN CONNECTION WITH ANY OTHER WORK OR PROJECT OTHER THAN THE SPECIFIC PROJECT FOR WHICH THEY HAVE BEEN PREPARED AND DEVELOPED, WITHOUT THE WRITTEN CONSENT OF THE ARCHITECT. VISUAL CONTACT WITH THESE DRAWINGS AND SPECIFICATIONS SHALL CONSTITUTE CONCLUSIVE EVIDENCE OF ACCEPTANCE OF THESE RESTRICTIONS.

NO.	REVISIONS	DATE
01	PLAN CHECK REVISIONS	06/06/2016

LICENSED ARCHITECT
STEPHEN M. ALBERT
NO. C 9412
REN. 5-31-13
STATE OF CALIFORNIA

1833 N. GAREY AVE.

1833 NORTH GAREY AVENUE
PAMONA, CALIFORNIA 91767

ARCHITECTURAL DETAILS - WALLS

the albert group architects
21032 Stoner Ave | Los Angeles, CA 90025 | 310.312.0393

C.U.P NUMBER:

PROJECT NUMBER: 14130

PROJECT STATUS: PLAN CHECK RESUBMITTAL

ISSUE DATE: 07/18/2016

SHEET NUMBER: AD.11

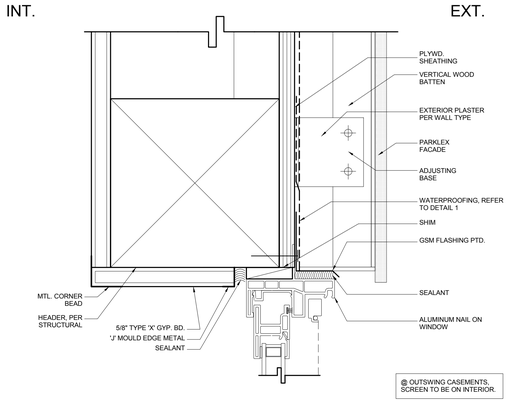

ALUM. WINDOW HEAD @ EXTERIOR WALL | SCALE: 6" = 1'-0" | **8**

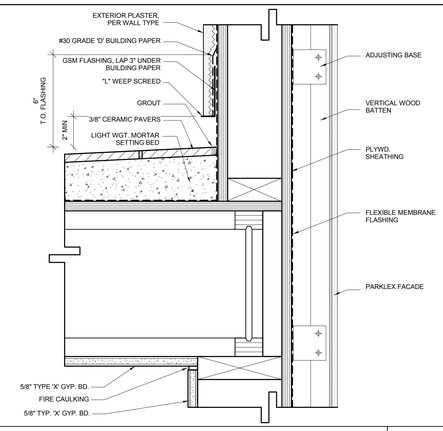

DECK SECTION @ EXT. WALL | SCALE: 3" = 1'-0" | **4**

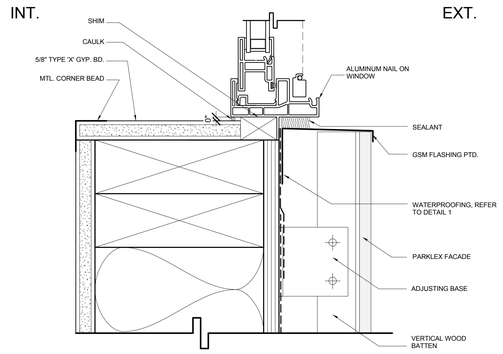

ALUM. WINDOW SILL @ EXTERIOR WALL | SCALE: 6" = 1'-0" | **7**

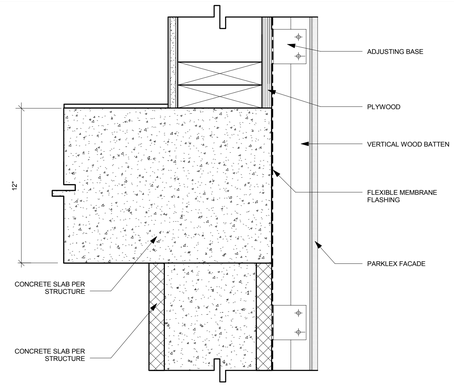

SECOND FLOOR @ EXT. WALL | SCALE: 3" = 1'-0" | **3**

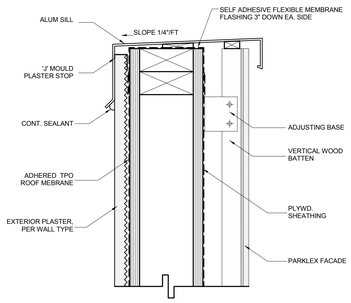

PARAPET CAP FLASHING | SCALE: 3" = 1'-0" | **6**

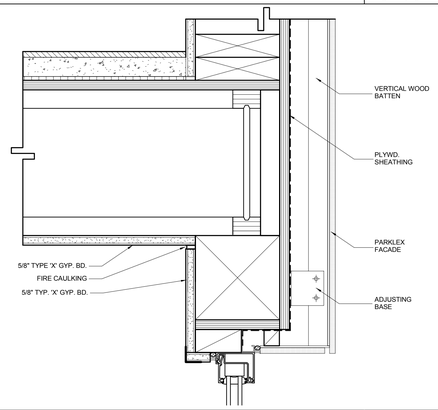

LOFT FLOOR @ EXT. WALL | SCALE: 3" = 1'-0" | **2**

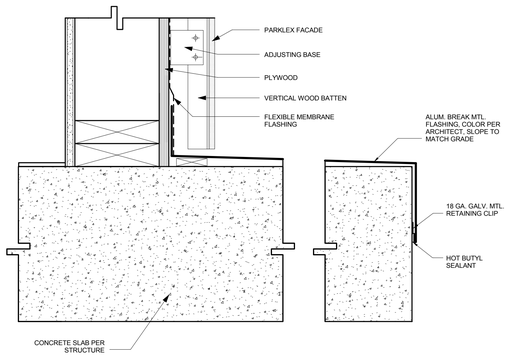

SECOND FLOOR @ PODIUM DECK | SCALE: 3" = 1'-0" | **9**

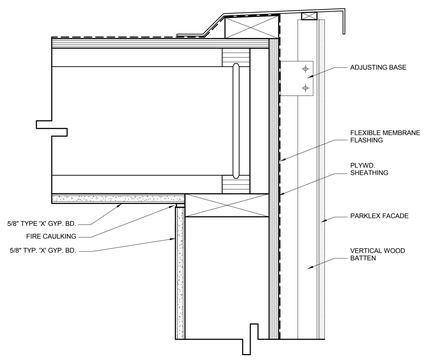

ROOF DETAIL | SCALE: 3" = 1'-0" | **5**

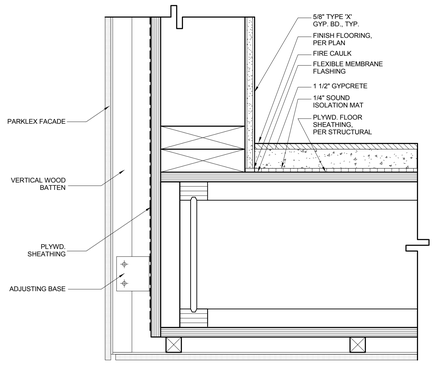

LOFT FLOOR @ WALKWAY WALL | SCALE: 3" = 1'-0" | **1**

TYPICAL PANEL ASSEMBLY

THE ABOVE DRAWINGS AND SPECIFICATIONS AND REPORTS CONTAINED HEREIN ARE AND SHALL REMAIN THE PROPERTY OF THE ARCHITECT AND NO PART THEREOF SHALL BE COPIED, DISCLOSED TO OTHERS OR USED IN CONNECTION WITH ANY OTHER WORK OR PROJECT OTHER THAN THE SPECIFIC PROJECT FOR WHICH THEY HAVE BEEN PREPARED AND DEVELOPED, WITHOUT THE WRITTEN CONSENT OF THE ARCHITECT. VISUAL CONTACT WITH THESE DRAWINGS OR SPECIFICATIONS SHALL CONSTITUTE CONCLUSIVE EVIDENCE OF ACCEPTANCE OF THESE RESTRICTIONS.

NO.	REVISIONS	DATE
01	PLAN CHECK REVISIONS	06/06/2016

LICENSED ARCHITECT
STEPHEN M. ALBERT
NO. C 9412
REN. 5-31-13
STATE OF CALIFORNIA

1833 N. GAREY AVE.

1833 NORTH GAREY AVENUE
PAMONA, CALIFORNIA 91767

ARCHITECTURAL DETAILS - PARKLEX

the albert group architects
24352 Steiner Ave | Los Angeles, CA 910723 | 310.919.9555

C.U.P NUMBER:

PROJECT NUMBER: 14130

PROJECT STATUS: PLAN CHECK RESUBMITTAL

ISSUE DATE: 07/18/2016

SHEET NUMBER: AD.12

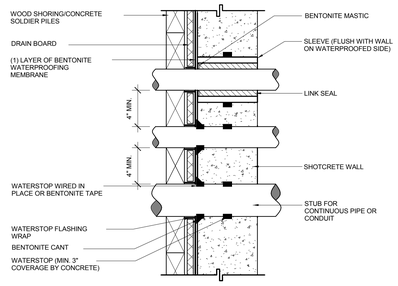

NOTES:

1. PIPE/CONDUIT CLEARANCE MUST BE MIN. 4" BETWEEN PIPE & OTHER PIPES OR BETWEEN FOOTING OR WALLS & PIPE.

2. PIPES NEXT TO WALL (I.E. PARALLEL TO WALL) MUST HAVE SUITABLE CLEARANCE TO ALLOW WATERPROOFING (6" MIN.).

3. FILL ALL GAPS IN LAGGING WITH BENTONITE TAPE OR BENTONITE MASTIC.

PIPE PENETRATION THROUGH BELOW GRADE WALL | SCALE: 1 1/2" = 1'-0" | **8**

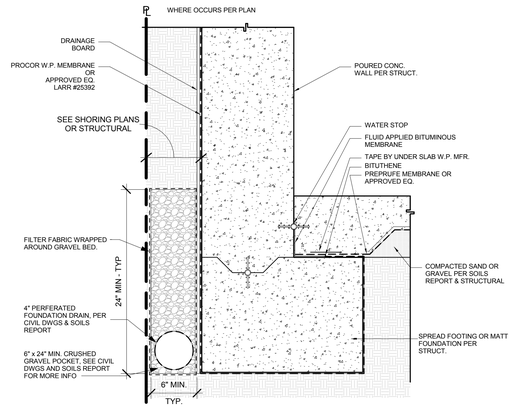

WATERPROOFING @ B.O. BASEMENT WALL | SCALE: 1 1/2" = 1'-0" | **4**

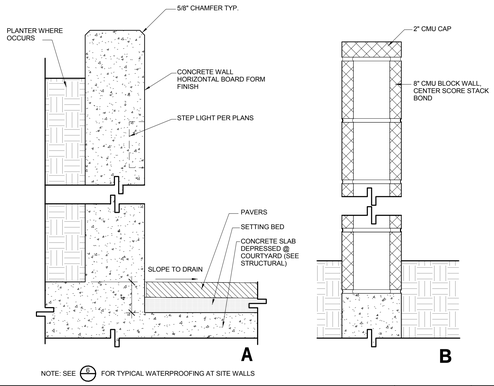

NOTE: SEE 4/A FOR TYPICAL WATERPROOFING AT SITE WALLS

SITE WALL | SCALE: 1 1/2" = 1'-0" | **7**

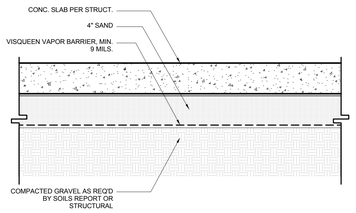

REF SOILS REPORT
SR.01-SR.04

FLOOR SLAB BELOW GRADE | SCALE: 1 1/2" = 1'-0" | **3**

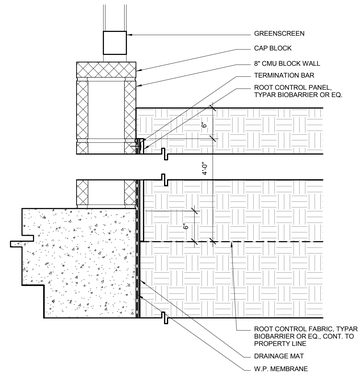

WATERPROOFING @ PLANTER WALL | SCALE: 1 1/2" = 1'-0" | **6**

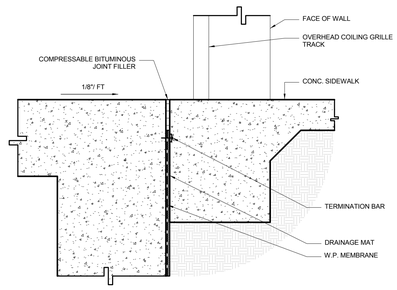

WATERPROOFING & COILING GATE THRESHOLD | SCALE: 1 1/2" = 1'-0" | **2**

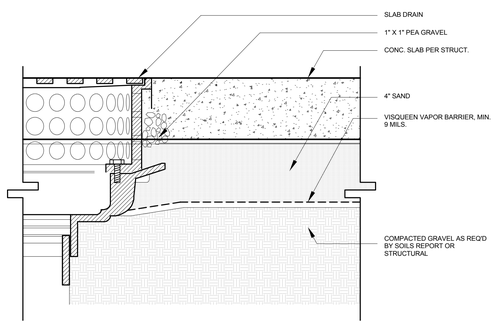

REF SOILS REPORT
SR.01-SR.04

FLOOR SLAB BELOW GRADE DRAIN | SCALE: 3" = 1'-0" | **9**

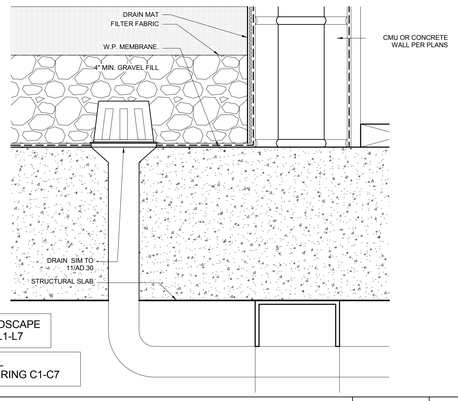

REF LANDSCAPE DESIGN L1-L7

REF CIVIL ENGINEERING C1-C7

PLANTER DRAIN | SCALE: 3" = 1'-0" | **5**

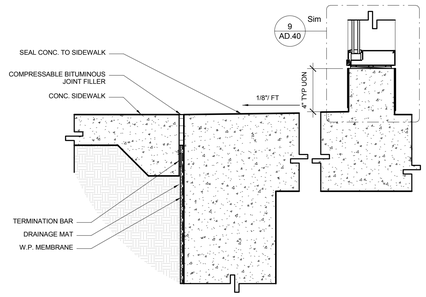

WINDOW SILL ON CONC. DECK / GRADE | SCALE: 1 1/2" = 1'-0" | **1**

THE ABOVE DRAWINGS AND SPECIFICATIONS AND REPRESENTATIONS HEREIN ARE AND SHALL REMAIN THE PROPERTY OF THE ARCHITECT AND NO PART THEREOF SHALL BE CONVEYED TO OTHERS OR USED IN CONNECTION WITH ANY OTHER WORK OR PROJECT OTHER THAN THE SPECIFIC PROJECT FOR WHICH THEY HAVE BEEN PREPARED AND DEVELOPED, WITHOUT THE WRITTEN CONSENT OF THE ARCHITECT. VISUAL CONTACT WITH THESE DRAWINGS OR SPECIFICATIONS SHALL CONSTITUTE CONCLUSIVE EVIDENCE OF ACCEPTANCE OF THESE RESTRICTIONS.

NO.	REVISIONS	DATE
01	PLAN CHECK REVISIONS	06/06/2016

LICENSED ARCHITECT
STEPHEN M. ALBERT
NO. C 9412
REN. 5-31-13
STATE OF CALIFORNIA

1833 N. GAREY AVE.

1833 NORTH GAREY AVENUE
PAMONA, CALIFORNIA 91767

ARCHITECTURAL DETAILS - FOUNDATION

the albert group architects
24932 Stanner Ave | Lake Hughes, CA 93532 | 310.929.8555

C.U.P NUMBER:

PROJECT NUMBER: 14130

PROJECT STATUS: PLAN CHECK RESUBMITTAL

ISSUE DATE: 07/18/2016

SHEET NUMBER: AD.20

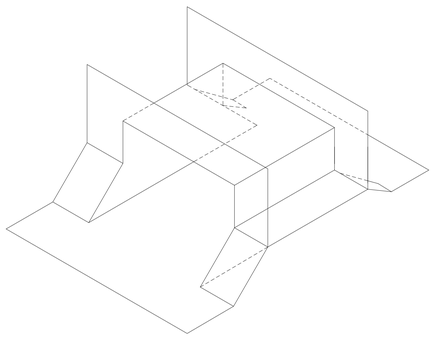

THROUGH WALL SCUPPER - TYPICAL

SCALE: 3" = 1'-0" | 16

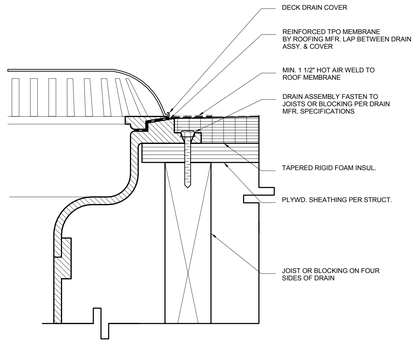

ROOF DRAIN

SCALE: 6" = 1'-0" | 12

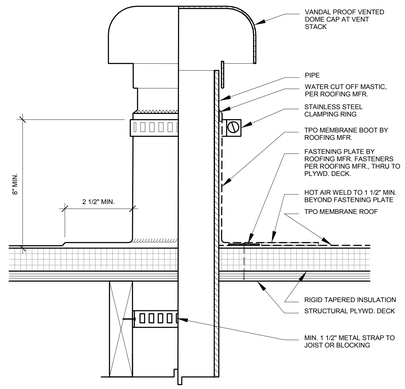

VENT STACK FLASHING @ PIPE PENETRATION

SCALE: 3" = 1'-0" | 8

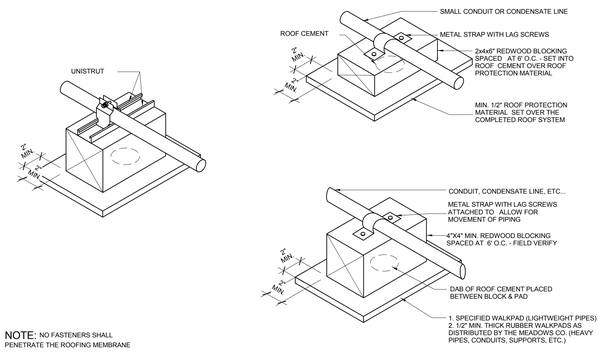

NOTE: NO FASTENERS SHALL PENETRATE THE ROOFING MEMBRANE

PIPE SUPPORT

SCALE: 1 1/2" = 1'-0" | 4

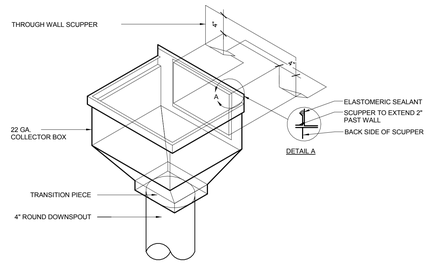

ROOF GUTTER & DOWNSPOUT - TYPICAL

SCALE: 1 1/2" = 1'-0" | 15

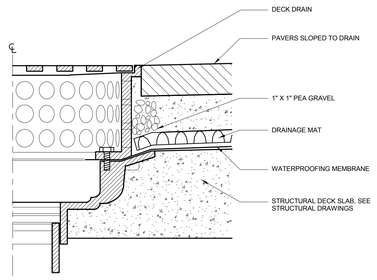

ROOF FLASHING / DECK DRAIN FLASHING

SCALE: 3" = 1'-0" | 11

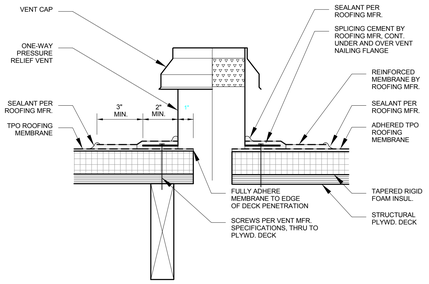

ROOF VENT

SCALE: 3" = 1'-0" | 7

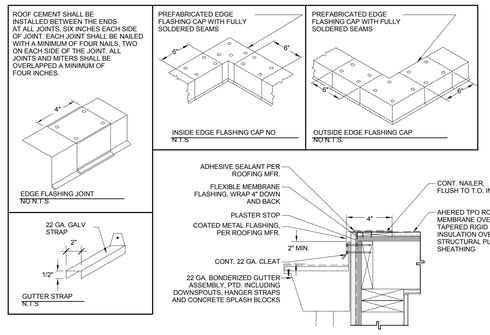

ROOF FLASHING @ GUTTER - TYPICAL

SCALE: N.T.S. | 3

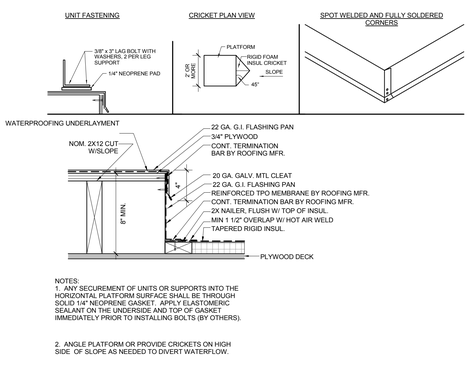

NOTES:
1. ANY SECUREMENT OF UNITS OR SUPPORTS INTO THE HORIZONTAL PLATFORM SURFACE SHALL BE THROUGH SOLID 1/4" NEOPRENE GASKET. APPLY ELASTOMERIC SEALANT ON THE UNDERSIDE AND TOP OF GASKET IMMEDIATELY PRIOR TO INSTALLING BOLTS (BY OTHERS).

2. ANGLE PLATFORM OR PROVIDE CRICKETS ON HIGH SIDE OF SLOPE AS NEEDED TO DIVERT WATERFLOW.

COLLECTOR BOX

SCALE: 1 1/2" = 1'-0" | 14

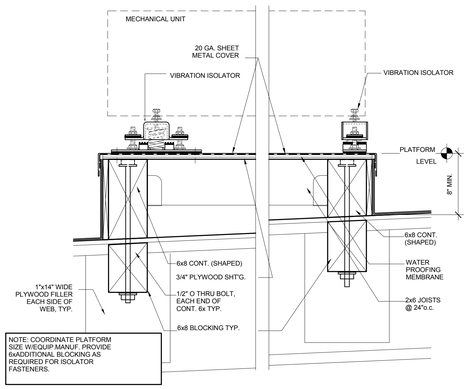

NOTE: COORDINATE PLATFORM SIZE W/EQUIP.MANUF. PROVIDE 6xADDITIONAL BLOCKING AS REQUIRED FOR ISOLATOR FASTENERS.

EQUIPMENT PAD

SCALE: 1 1/2" = 1'-0" | 10

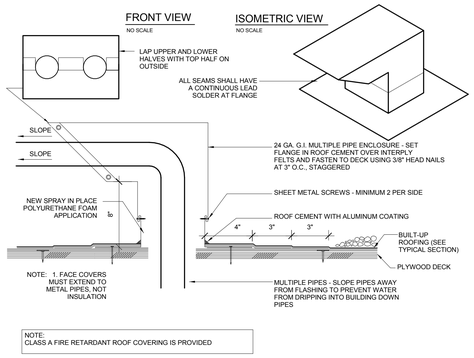

NOTE:
CLASS A FIRE RETARDANT ROOF COVERING IS PROVIDED

PIPE ENCLOSURE

SCALE: 1" = 1'-0" | 6

ROOF FLASHING / ELEVATOR & STAIR

SCALE: N.T.S. | 2

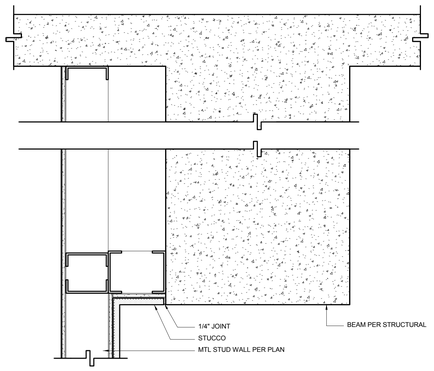

SOFFIT @ GARAGE

SCALE: 1 1/2" = 1'-0" | 13

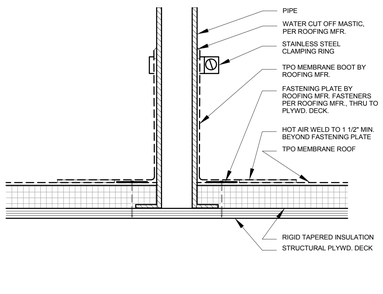

SOLAR PANEL FLASHING

SCALE: 3" = 1'-0" | 9

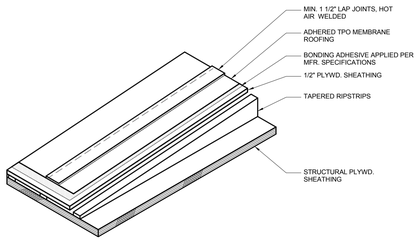

NOTES:
1. CARLISLE TPO SINGLE PLY ROOFING MEMBRANE, LARR NO. 25844, OR APPROVED EQUAL (WITH LARR NO).
2. ROOF SLOPES TO DRAIN PER MANUFACTURER RECOMMENDATIONS

TPO MEMBRANE ROOFING

SCALE: N.T.S. | 5

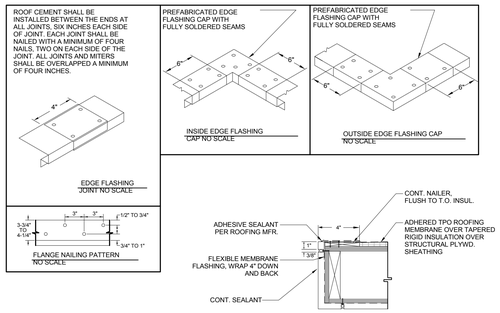

ROOF FLASHING - TYPICAL

SCALE: N.T.S. | 1

THE ABOVE DRAWINGS AND SPECIFICATIONS AND REPRESENTATIONS HEREIN ARE AND SHALL REMAIN THE PROPERTY OF THE ARCHITECT AND NO PART THEREOF SHALL BE CONVEYED OR REPRODUCED OR USED IN CONNECTION WITH ANY OTHER WORK OR PROJECT OTHER THAN THE SPECIFIC PROJECT FOR WHICH THEY HAVE BEEN PREPARED AND DEVELOPED, WITHOUT THE WRITTEN CONSENT OF THE ARCHITECT. VISUAL CONTACT WITH THESE DRAWINGS AND SPECIFICATIONS SHALL CONSTITUTE CONCLUSIVE EVIDENCE OF ACCEPTANCE OF THESE RESTRICTIONS.

NO.	REVISIONS	DATE
01	PLAN CHECK REVISIONS	06/06/2016

LICENSED ARCHITECT
STEPHEN M. ALBERT
NO. C 9412
REN. 5-31-13
STATE OF CALIFORNIA

1833 N. GAREY AVE.

1833 NORTH GAREY AVENUE
PAMONA, CALIFORNIA 91767

ARCHITECTURAL DETAILS - ROOFING

the albert group architects
24352 Steiner Ave | Los Angeles, CA 90293 310.930.8585

C.U.P NUMBER:

PROJECT NUMBER:
14130

PROJECT STATUS:
PLAN CHECK RESUBMITTAL

ISSUE DATE:
07/18/2016

SHEET NUMBER:
AD.30

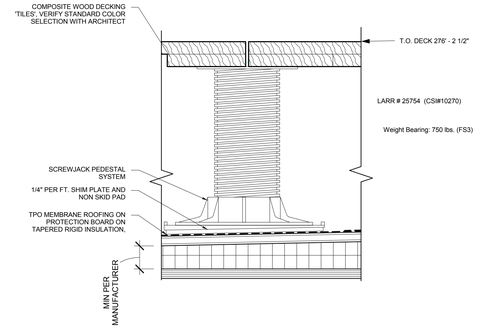

PEDESTAL DECK @ LP | SCALE: 3" = 1'-0" | 14

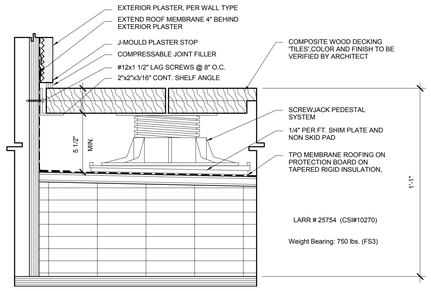

PEDESTAL DECK SYSTEM @ WALL | SCALE: 3" = 1'-0" | 10

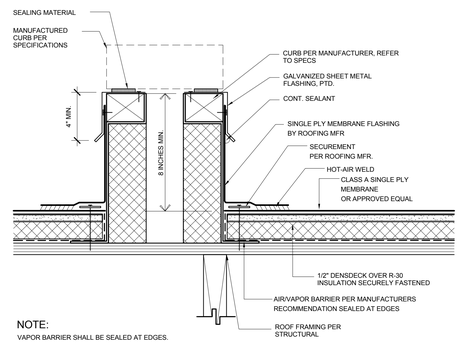

NOTE:
VAPOR BARRIER SHALL BE SEALED AT EDGES.

MECHANICAL CURB @ ROOF | SCALE: 3" = 1'-0" | 6

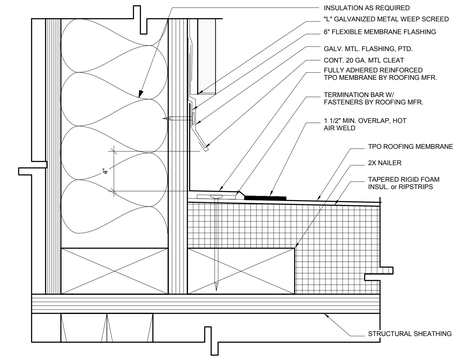

ROOF STRUCTURE | SCALE: 6" = 1'-0" | 2

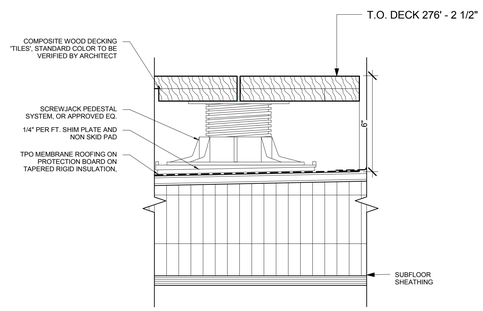

PEDESTAL DECK @ HP | SCALE: 3" = 1'-0" | 13

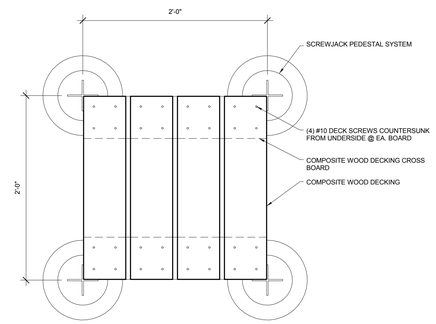

PEDESTAL DECK SYSTEM PLAN | SCALE: 1 1/2" = 1'-0" | 9

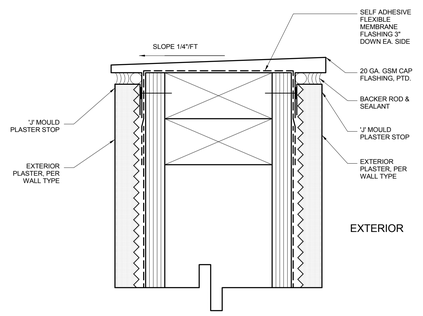

PARAPET CAP @ PATIO WALLS | SCALE: 6" = 1'-0" | 5

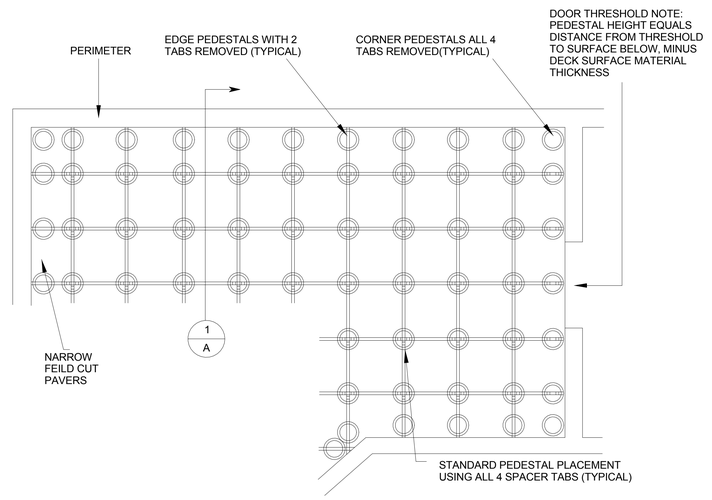

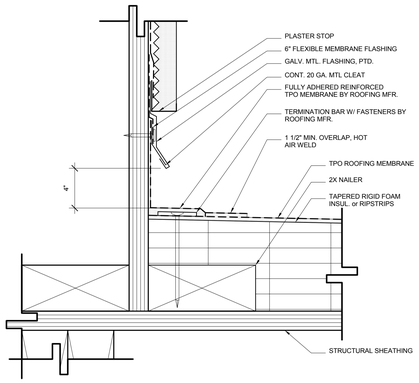

ROOFING TERMINATION @ PARAPET | SCALE: 6" = 1'-0" | 12

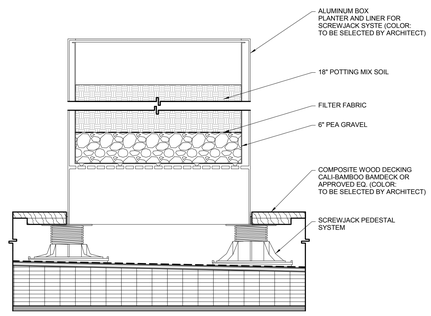

PEDESTAL DECK SYSTEM PLANTER | SCALE: 1 1/2" = 1'-0" | 8

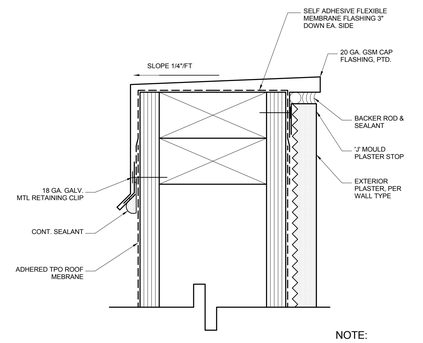

NOTE:
U.N.O. USE THIS DETAIL FOR PARAPETS 12" IN HEIGHT OR LESS

PARAPET CAP FLASHING 12" AND SHORTER | SCALE: 6" = 1'-0" | 4

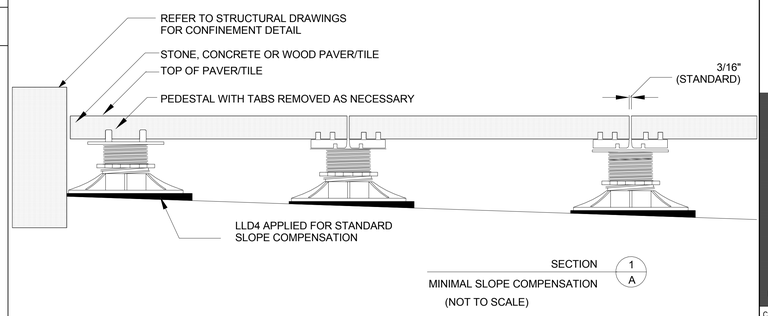

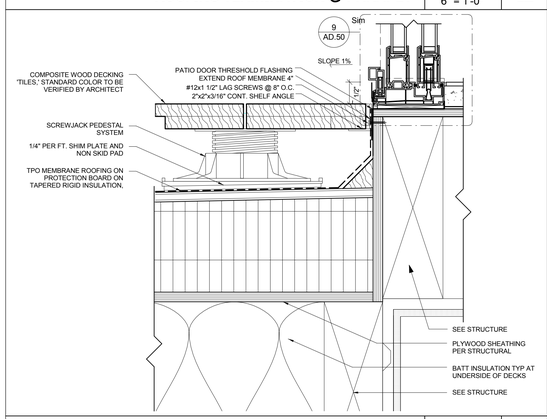

PEDESTAL DECK SYSTEM @ UNIT OPENING | SCALE: 3" = 1'-0" | 11

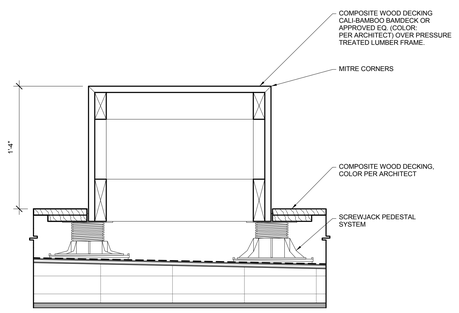

PEDESTAL DECK SYSTEM BENCH | SCALE: 1 1/2" = 1'-0" | 7

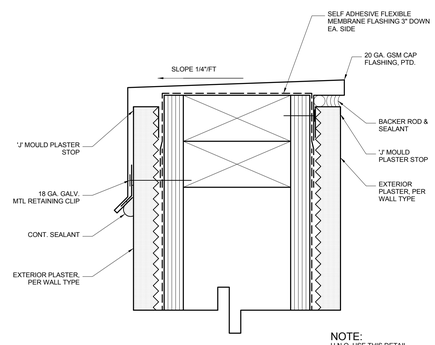

NOTE:
U.N.O. USE THIS DETAIL FOR PARAPETS OVER 12" IN HEIGHT

PARAPET CAP FLASHING GREATER THAN 12" | SCALE: 6" = 1'-0" | 3

NOTES:
1. INSTALLATION TO BE COMPLETED IN ACCORDANCE WITH MANUFACTURERS SPECIFICATIONS.
2. DO NOT SCALE DRAWINGS.
3. CONTRACTORS NOTE: FOR PRODUCT AND COMPANY INFORMATION VISIT www.CADdetails.com/info

REFERENCE NUMBER 512-051.

TYPICAL THRESHOLD PLACEMENTS | SCALE: 12" = 1'-0" | 1

THE ABOVE DRAWINGS AND SPECIFICATIONS AND DESIGNS SHOWN THEREON AND REPRESENTED THEREBY ARE AND SHALL REMAIN THE PROPERTY OF THE ARCHITECT AND NO PART THEREOF SHALL BE SOLD OR TRANSFERRED TO OTHERS OR USED IN CONNECTION WITH ANY OTHER WORK OR PROJECT OTHER THAN THE SPECIFIC PROJECT FOR WHICH THEY HAVE BEEN PREPARED AND DEVELOPED, WITHOUT THE WRITTEN CONSENT OF THE ARCHITECT. VISUAL CONTACT WITH THESE DRAWINGS AND SPECIFICATIONS SHALL CONSTITUTE CONCLUSIVE EVIDENCE OF ACCEPTANCE OF THESE RESTRICTIONS.

NO.	REVISIONS	DATE
01	PLAN CHECK REVISIONS	06/06/2016

LICENSED ARCHITECT
STEPHEN M. ALBERT
NO. C 9412
REN. 5-31-13
STATE OF CALIFORNIA

1833 N. GAREY AVE.

1833 NORTH GAREY AVENUE
PAMONA, CALIFORNIA 91767

ARCHITECTURAL DETAILS - ROOFING

the albert group architects
24012 Steiner Ave | Los Angeles, CA 91723 310.820.8383

C.U.P NUMBER:

PROJECT NUMBER: 14130

PROJECT STATUS: PLAN CHECK RESUBMITTAL

ISSUE DATE: 07/18/2016

SHEET NUMBER: AD.31

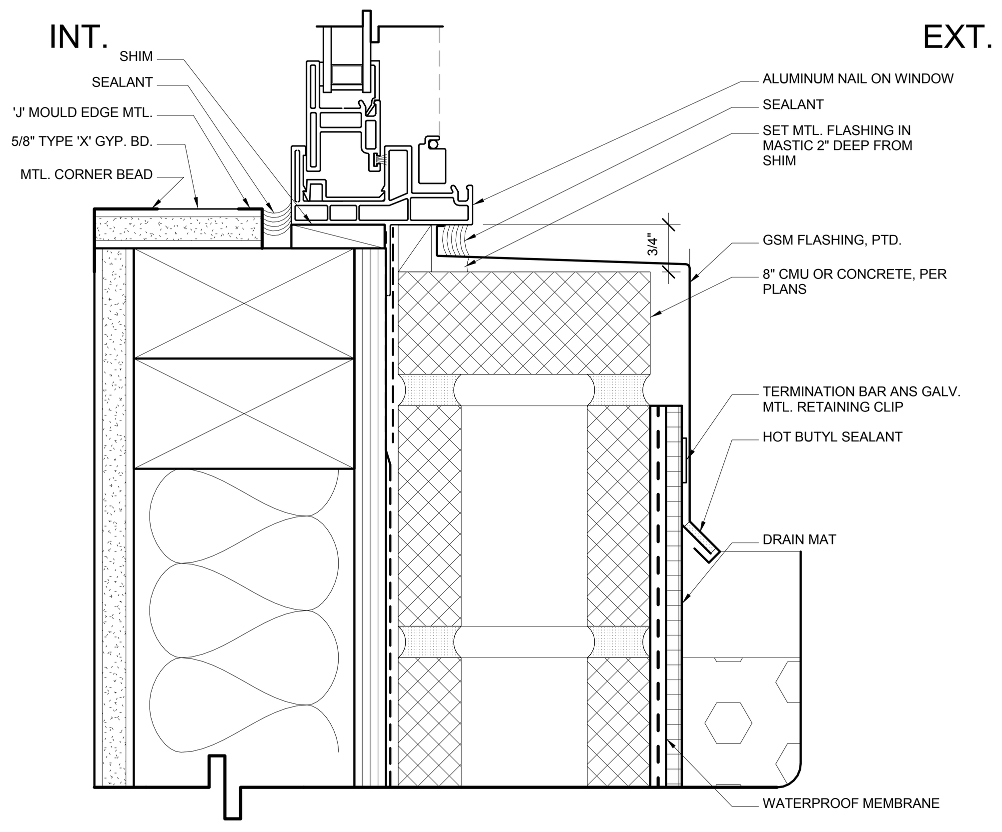

NAIL ON ALUM. WINDOW SILL @ PLANTER

SCALE: 6" = 1'-0" | 12

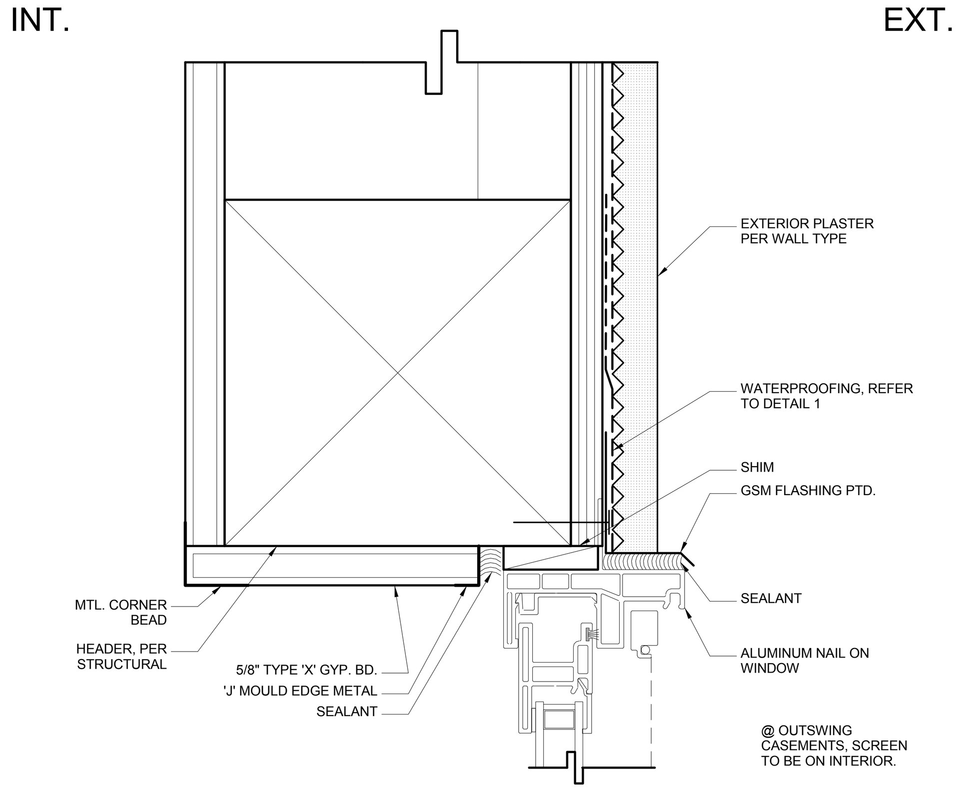

NAIL ON ALUM. WINDOW HEAD

SCALE: 6" = 1'-0" | 8

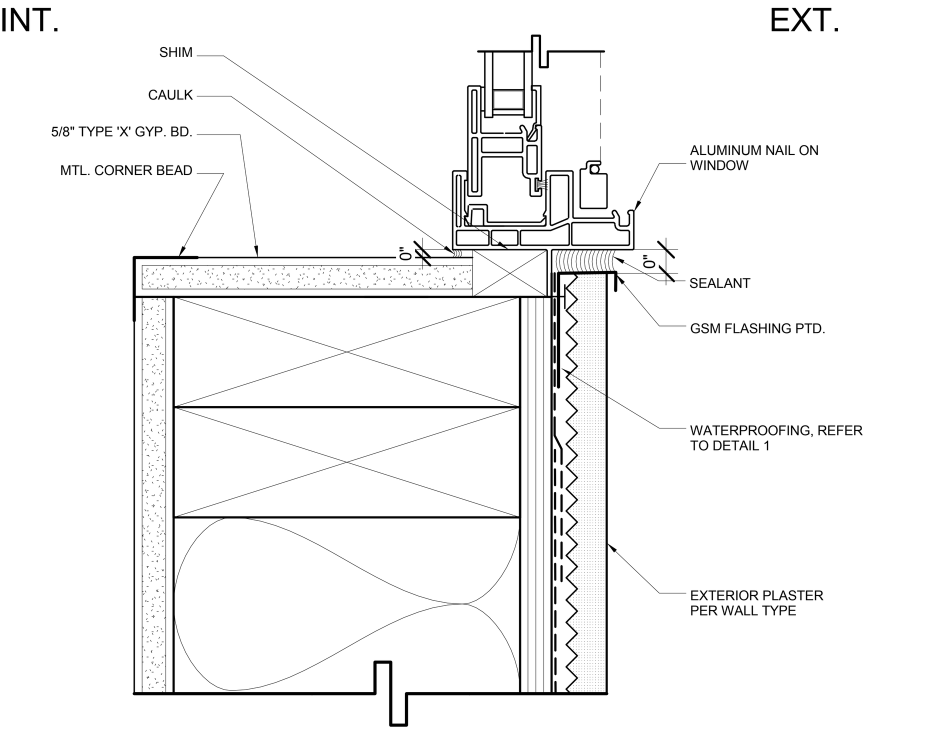

NAIL ON ALUM. WINDOW SILL

SCALE: 6" = 1'-0" | 4

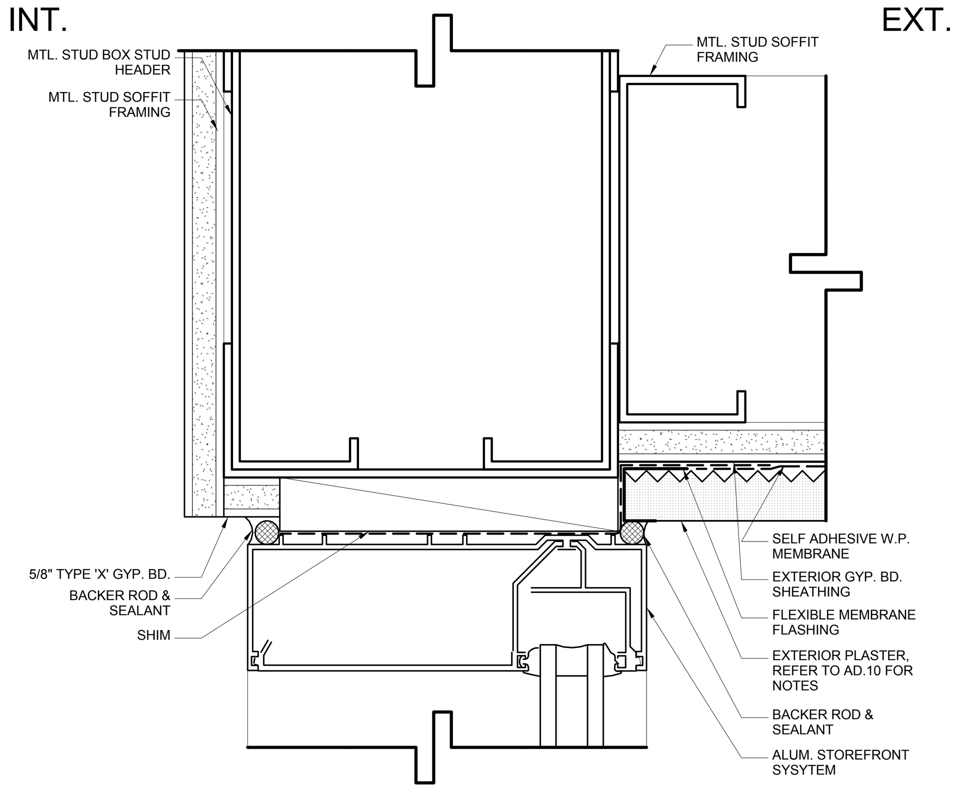

WINDOW WALL HEAD @ SOFFIT, JAMB SIM

SCALE: 6" = 1'-0" | 11

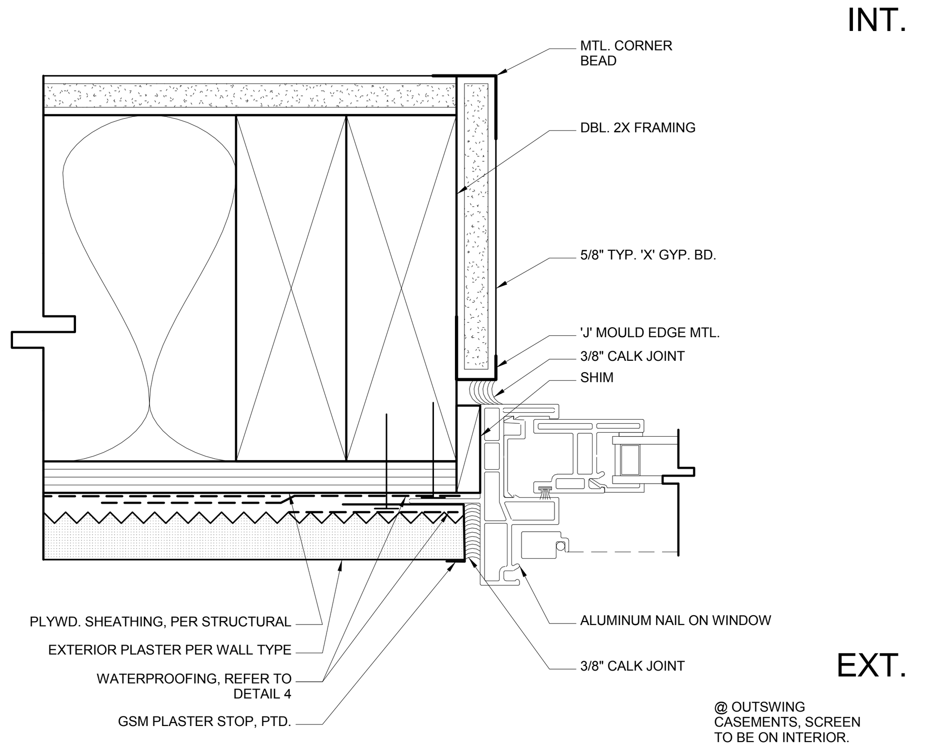

NAIL ON ALUM. WINDOW JAMB

SCALE: 6" = 1'-0" | 7

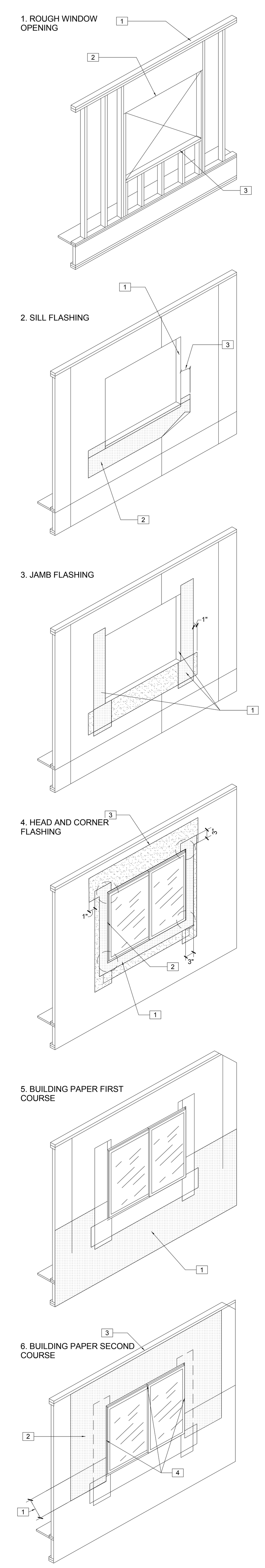

LEGEND

1. SQUARE & LEVEL FRAMING.
2. ROUGH WINDOW OPENING.
3. ROUGH FRAMED OPENING SUFFICIENTLY LARGER IN WIDTH & HEIGHT THAN THE ACTUAL FRAME DIMENSIONS OF THE WINDOW. TO ASSURE ADEQUATE CLEARANCE CONSULT THE WINDOW MANUFACTURER'S LITERATURE FOR THE RECOMMENDED ROUGH OPENING DIMENSIONS.

LEGEND

1. WALL SHEATHING (WHERE OCCURS), VERIFY SHEATHING EDGES FLUSH WITH FRAME OPENING AND COMPLETION OF STRUCTURAL NAILING & REINFORCEMENT BEFORE PROCEEDING.
2. APPLY 9" "MOISTOP" OR APPROVED EQUIVALENT SILL FLASHING HORIZONTALLY BELOW THE SILL. (WRAP FLASHING INTO ROUGH OPENING TO PROTECT FRAMING- AT RECESSED WINDOWS ONLY.) FASTEN THE TOP EDGE OF THE SILL FLASHING TO THE FRAMING, BUT DO NOT FASTEN THE LOWER EDGE, SO WEATHER RESISTANT BUILDING PAPER APPLIED LATER MAY BE SLIPPED UP & UNDERNEATH THE FLASHING IN WEATHER BOARD FASHION.
3. EXTEND "MOISTOP" OR APPROVED EQUIVALENT SILL FLASHING HORIZONTALLY 1" BEYOND VERTICAL JAMB FLASHING APPLIED LATER.

LEGEND

1. JAMB FLASHING FLUSH AT BOTH SIDES OF OPENING LEAVING FREE AT BOTTOM. (WRAP JAMB FLASHING INTO ROUGH OPENING AT RECESSED WINDOWS ONLY, SIMILAR AT SILL). EXTEND BEYOND SILL FLASHING ABOVE WHERE HEAD FLASHING WILL INTERSECT. LAP JAMB FLASHING OVER TOP SILL FLASHING. LEAVE PAPER FLASHING UNATTACHED FROM SILL DOWN.

LEGEND

1. APPLY 6" SELF-ADHERING "E-Z SEAL" MEMBRANE OVER "MOISTOP" AND 3" BEYOND WINDOW FLANGE.
2. APPLY 6" "E-Z SEAL" MEMBRANE AT JAMBS OVER "MOISTOP". EXTEND 3" BEYOND WINDOW FLANGE.
3. APPLY 12" "E-Z SEAL" MEMBRANE AT HEADER OF WINDOW, EXTEND 1" BEYOND "MOISTOP".
4. APPLY FIRM PRESSURE TO SELF-ADHERING MEMBRANE TO ASSURE ADHERENCE TO WINDOW FINS.
5. CHECK ALL CORNERS FOR PROPER SEAL OF SELF-ADHERING MEMBRANE.

LEGEND

1. INSERT FIRST COURSE OF 60 MIN. PAPER UNDER "MOISTOP" AND STAPLE "MOISTOP".

LEGEND

1. 6" MIN. VERTICAL LAP FOR ALL HORIZONTAL & VERTICAL JOINTS IN BUILDING PAPER.
2. LAP SUBSEQUENT COURSES OVER "MOISTOP".
3. CARRY PAPER TO UPPER EDGE OF TOP PLATE
4. HOLD PAPER BACK 1" FROM WINDOW.

NAIL ON WINDOW WATERPROOFING

SCALE: N.T.S. | 3

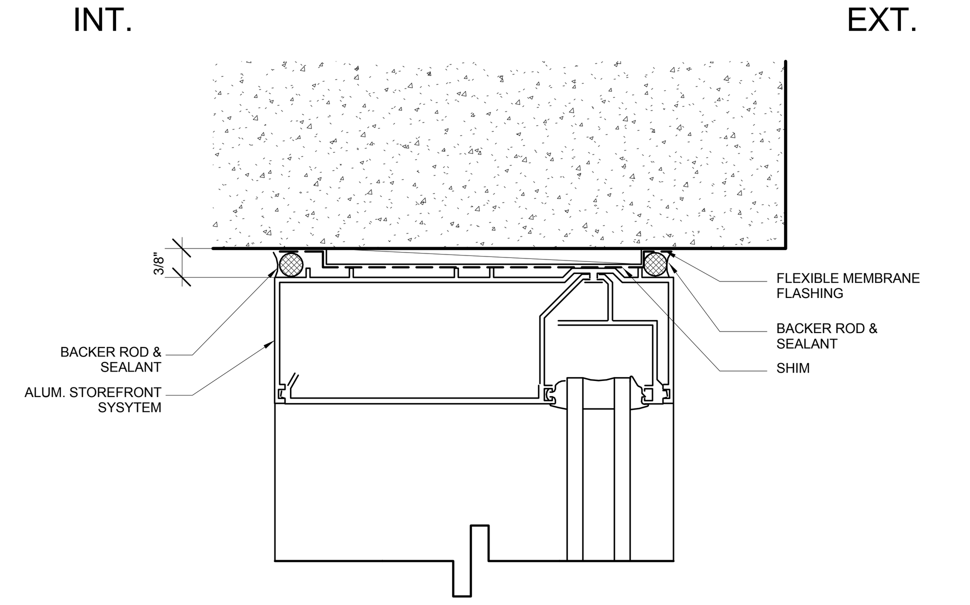

WINDOW WALL HEAD, JAMB SIM @ CONC OR CMU

SCALE: 6" = 1'-0" | 10

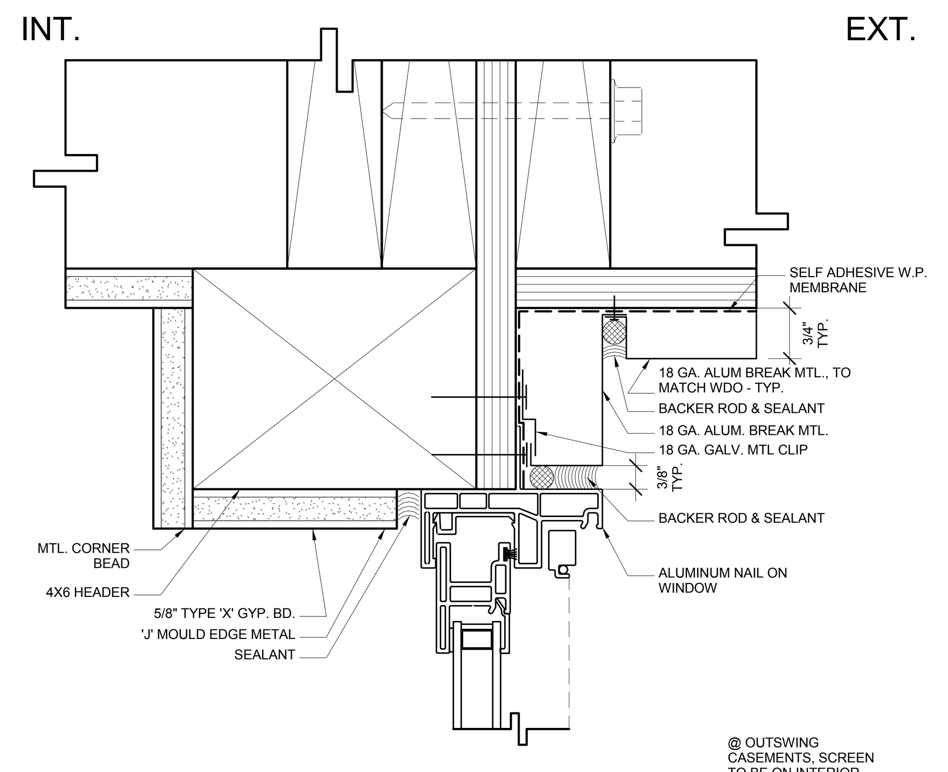

NAIL ON ALUM. WDO HEAD @ EYEBROW CANOPY

SCALE: 6" = 1'-0" | 6

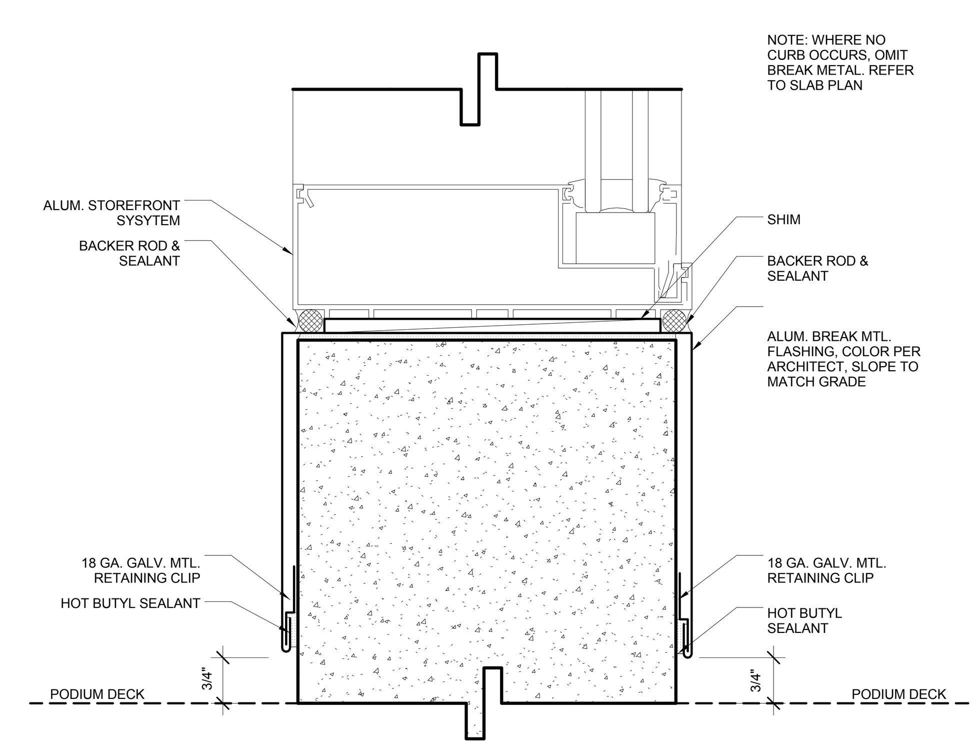

WINDOW WALL SILL @ DECK OR GRADE

SCALE: 6" = 1'-0" | 9

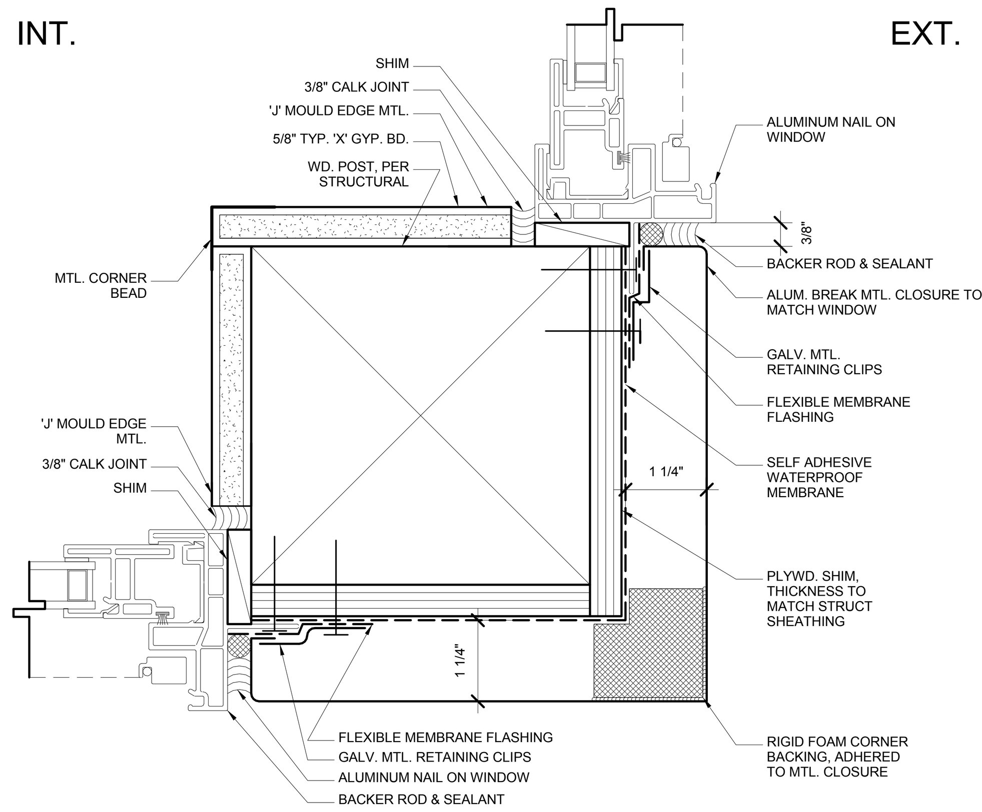

NAIL ON ALUM. WINDOW CORNER POST

SCALE: 6" = 1'-0" | 5

TRACO
A DIVISION OF KAWNEER

SOUND CONTROL 2 OF 4
WINDOWS WITH INSULATING GLASS

GLASS OPTIONS
X3-0
Page 8 of 10

TEST RESULTS

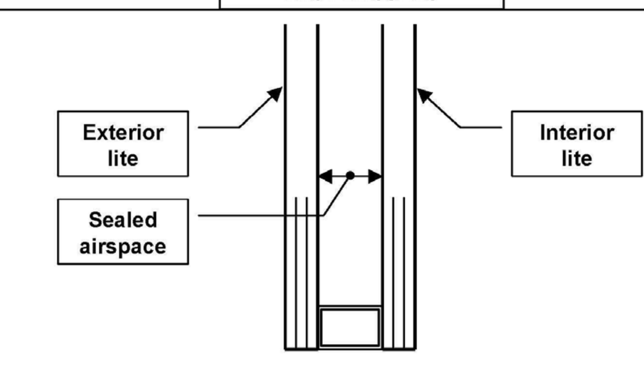

Model	STC^	OITC^^	Exterior lite	Sealed airspace	Interior lite
TR-5000	30	26*	1/8"	1/2"	1/8"
TR-6000	33	28*	1/4" lami (.030")	3/8"	1/8"
TR-10,000	34	27*	1/8"	3/4"	1/8"
TR-6000	35	30	1/4" lami (.060")	3/8"	1/8"
TR-5000	36	32*	1/4" lami	3/8"	1/8"
TR-8100	36	30	1/4" lami (.060")	1/2"	3/16"
TR-9100	36	31	1/4" lami (.060")	1/2"	3/16"
TR-3800	37	30	1/4" lami	7/16"	1/4" lami
TR-7100	38	31	1/4" lami (.060")	9/16"	3/16"
TR-8100	38	33	5/16" lami (.060")	3/8"	5/16" lami (.060")
TR-3800	39	32	1/4" lami (.060")	9/16"	3/16"

^STC = Sound Transmission Class ^^OITC = Outdoor-Indoor Transmission Class *Calculated

www.traco.com

SOUND CONTROL WINDOWS

SCALE: 12" = 1'-0" | 2

Milgard WINDOWS & DOORS

Test Data

Standard Aluminum Sound Transmission Class

Series	Model	Test Size	Test Date	Test #	Glass 1	Glass 2	Glass 3	STC	EWR	OITC
1110	HV	71.75 x 47.75	4/21/1999	99-156	1/8	1/8	-	29	30	25
1110	HV	71.75 x 47.75	4/21/1999	99-158	1/8	1/4	-	30	32	27
1110	HV	71.75 x 47.75	4/21/1999	99-157	3/16	1/8	-	31	32	27
1110	HV	71.5 x 47.5	11/12/1998	98-411	7/32 LAM	3/16	-	31	33	28
1110	HV	71.5 x 47.5	11/12/1998	98-409	7/32 LAM	1/8	-	32	32	28
1110	HV	71.5 x 47.5	11/12/1998	98-412	7/32 LAM	7/32 LAM	-	32	34	29
Series	Model	Test Size	Test Date	Test #	Glass 1	Glass 2	Glass 3	STC	EWR	OITC
1510	SH	47.5 x 71.5	11/9/1998	98-399	3/32	3/32	-	27	28	23
1510	SH	47.5 x 71.5	5/18/1999	99-200	1/8	1/8	-	27	28	24
1510	SH	47.5 x 71.5	5/18/1999	99-201	1/4	1/8	-	30	31	27
1510	SH	47.5 x 71.5	5/18/1999	99-202	3/16	1/8	-	31	31	26
1510	SH	47.5 x 71.5	11/9/1998	98-398	7/32 LAM	1/8	-	32	33	28
1510	SH	47.5 x 71.5	11/10/1998	98-404	7/32 LAM	3/16	-	32	33	28
Series	Model	Test Size	Test Date	Test #	Glass 1	Glass 2	Glass 3	STC	EWR	OITC
1600	SD	71.5 x 79.5	1/25/2001	01-117	1/8	1/8	-	31	31	24
1600	SD	71.5 x 79.5	1/25/2001	01-116	3/16	3/16	-	33	35	28
1600	SD	71.5 x 79.5	1/25/2001	01-118	1/8	3/16	-	34	34	27
1600	SD	71.5 x 79.5	1/24/2001	01-113	1/8	7/32 LAM	-	35	35	28
1600	SD	71.5 x 79.5	1/25/2001	01-114	3/16	7/32 LAM	-	36	35	28
1600	SD	71.5 x 79.5	1/25/2001	01-115	7/32 LAM	7/32 LAM	-	36	36	29
Series	Model	Test Size	Test Date	Test #	Glass 1	Glass 2	Glass 3	STC	EWR	OITC
450	SD	71.5 X 79.5	11/11/1998	98-406	1/8	1/8	-	27	28	22
450	SD	71.5 X 79.5	11/11/1998	98-407	7/32 LAM	7/32 LAM	-	29	30	26
450	SD	71.5 X 79.5	6/14/2001	01-375	3/16	3/16	-	30	31	26
450	SD	71.5 X 79.5	11/11/1998	98-405	1/8	1/4	-	30	31	26
450	SD	71.5 X 79.5	6/14/2001	01-374	3/16	1/8	-	31	31	25
450	SD	71.5 X 79.5	11/11/1998	98-408	7/32 LAM	1/8	-	31	32	26
Series	Model	Test Size	Test Date	Test #	Glass 1	Glass 2	Glass 3	STC	EWR	OITC
710	PW	47.75 x 71.75	4/20/1999	99-149	1/8	1/8	-	30	30	24
710	PW	47.75 x 71.75	4/20/1999	99-152	3/16	1/8	-	32	32	26
710	PW	47.75 x 71.75	4/20/1999	99-153	1/4	1/8	-	33	33	27
710	PW	47.75 x 71.75	4/20/1999	99-154	7/32 LAM	1/8	-	34	33	27
710	PW	47.75 x 71.75	4/20/1999	99-151	7/32 LAM	3/16	-	35	35	29
710	PW	47.75 x 71.75	4/20/1999	99-150	7/32 LAM	7/32 LAM	-	37	36	29
Series	Model	Test Size	Test Date	Test #	Glass 1	Glass 2	Glass 3	STC	EWR	OITC
910	PW	71.5 x 47.5	11/10/1998	98-401	1/8	1/8	-	29	30	24
910	PW	71.5 x 47.5	11/10/1998	98-400	1/8	7/32 LAM	-	33	33	28
910	PW	71.5 x 47.5	11/10/1998	98-403	3/16	7/32 LAM	-	34	36	30
910	PW	71.5 x 47.5	11/10/1998	98-402	7/32 LAM	7/32 LAM	-	35	35	30
Series	Model	Test Size	Test Date	Test #	Glass 1	Glass 2	Glass 3	STC	EWR	OITC
910C	FC	35.5 x 59.5	11/9/1998	98-395	1/8	1/8	-	30	31	26
910C	FC	35.5 x 59.5	11/9/1998	98-397	1/4	1/8	-	35	35	30
910C	FC	35.5 x 59.5	11/9/1998	98-396	7/32 LAM	1/8	-	36	36	30
910C	FC	35.5 x 59.5	11/9/1998	98-394	7/32 LAM	1/4	-	36	36	30

Test data as of April 1, 2009. All data is subject to change without prior notification.

For the most up to date testing information, contact your Milgard sales representative.

TEST DATA-1
APRIL 2009

STANDARD ALUMINUM STC

SCALE: 12" = 1'-0" | 1

THE ABOVE DRAWINGS AND SPECIFICATIONS AND IDEAS, DESIGNS AND ARRANGEMENTS REPRESENTED THEREBY ARE AND SHALL REMAIN THE PROPERTY OF THE ARCHITECT AND NO PART THEREOF SHAL BE COPIED DISCLOSED TO OTHERS OR USED IN CONNECTION WITH ANY OTHER WORK OR PROJECT OTHER THAN THE SPECIFIC PROJECT FOR WHICH THEY HAVE BEEN PREPARED AND DEVELOPED, WITHOUT THE WRITTEN CONSENT OF THE ARCHITECT. VISUAL CONTACT WITH THESE DRAWINGS OR SPECIFICATIONS SHALL CONSTITUTE CONCLUSIVE EVIDENCE OF ACCEPTANCE OF THESE RESTRICTIONS.

NO.	REVISIONS	DATE
01	PLAN CHECK REVISIONS	06/06/2016

LICENSED ARCHITECT
STEPHEN M. ALBERT
NO. C 9412
REN. 5-31-13
STATE OF CALIFORNIA

1833 N. GAREY AVE.

1833 NORTH GAREY AVENUE
PAMONA, CALIFORNIA 91767

ARCHITECTURAL DETAILS - WINDOWS

the albert group architects
2032 Stoner Ave | Los Angeles, CA 90025 310.820.8863

C.U.P NUMBER:

PROJECT NUMBER: 14130

PROJECT STATUS: PLAN CHECK RESUBMITTAL

ISSUE DATE: 07/18/2016

SHEET NUMBER: AD.40

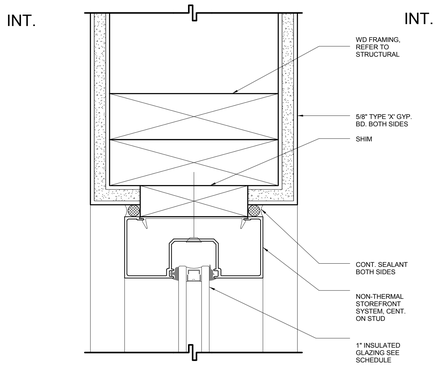

INT STOREFRONT SYSTEM @ WD, HEAD, JAMB SIM | SCALE: 6" = 1'-0" | 16

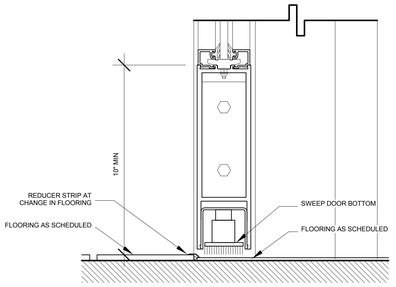

INTERIOR DOOR THRESHOLD | SCALE: 6" = 1'-0" | 12

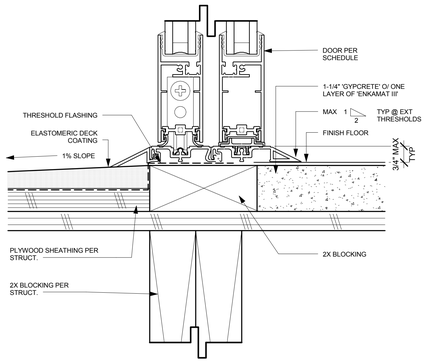

SLIDING DOOR @ DECK THRESHOLD | SCALE: 6" = 1'-0" | 8

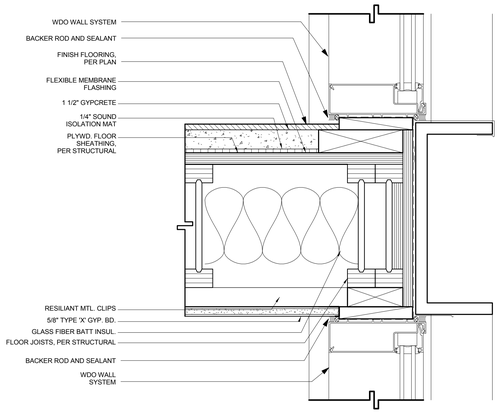

WDO WALL SYSTEM @ BAY WINDOWS | SCALE: 3" = 1'-0" | 4

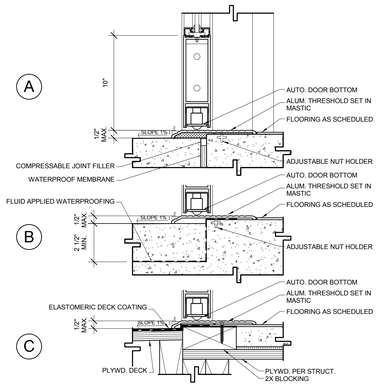

DOOR THRESHOLD, TYP FOR ALUM. & EXT. DOORS | SCALE: 3" = 1'-0" | 22

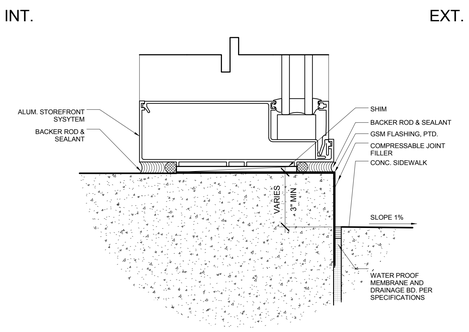

WINDOW WALL SILL @ PODIUM DECK | SCALE: 6" = 1'-0" | 11

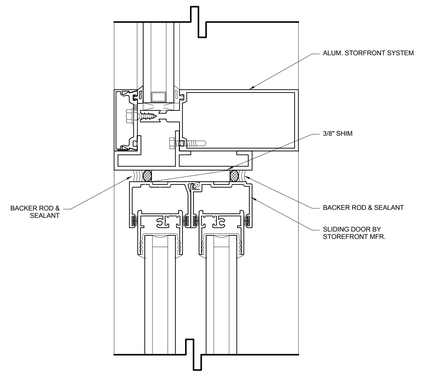

SLIDING DOOR @ WINDOW WALL HEAD | SCALE: 6" = 1'-0" | 7

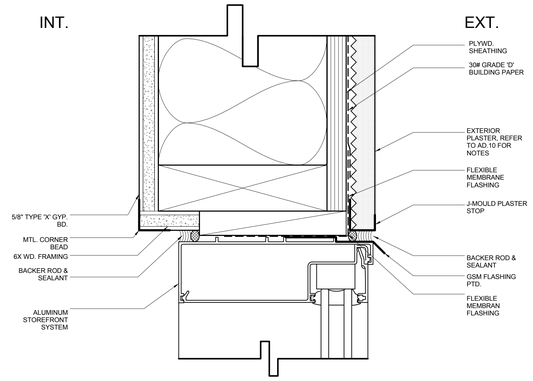

WDO WALL SYSTEM @ WOOD HEAD, DOOR SIM. | SCALE: 6" = 1'-0" | 3

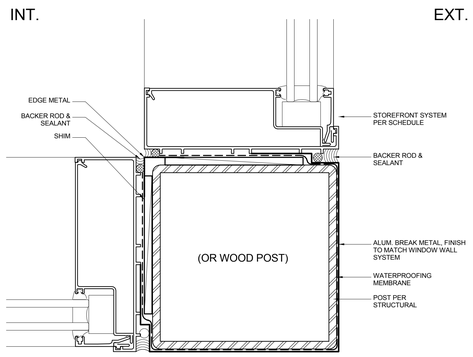

OUTSIDE CORNER @ WINDOW WALL SYST | SCALE: 6" = 1'-0" | 14

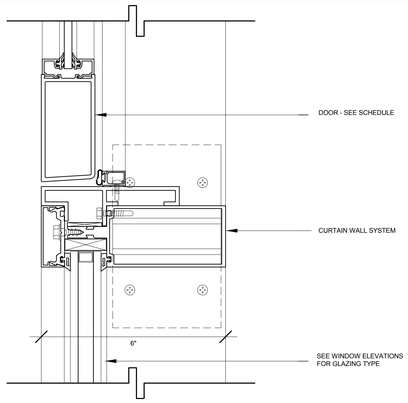

WINDOW WALL DOOR JAMB | SCALE: 6" = 1'-0" | 10

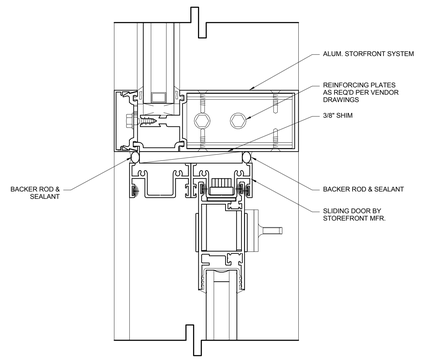

SLIDING DOOR @ WINDOW WALL JAMB | SCALE: 6" = 1'-0" | 6

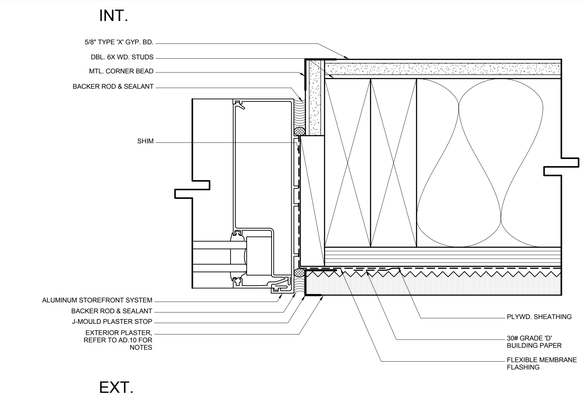

WDO WALL SYSTEM @ TYPE VB, JAMB, DOOR SIM. | SCALE: 6" = 1'-0" | 2

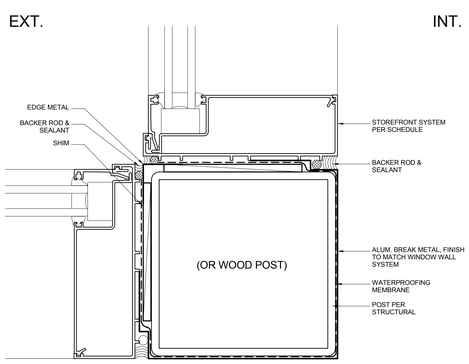

INS CORNER CONDITION @ WDO WALL SYSTEM | SCALE: 6" = 1'-0" | 13

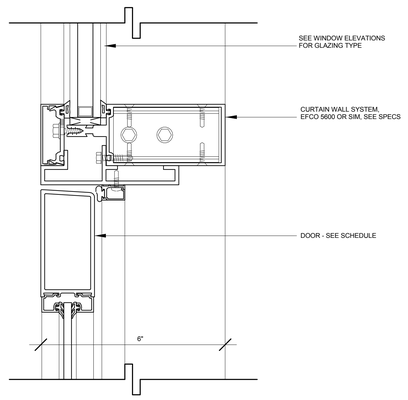

WINDOW WALL DOOR HEAD | SCALE: 6" = 1'-0" | 9

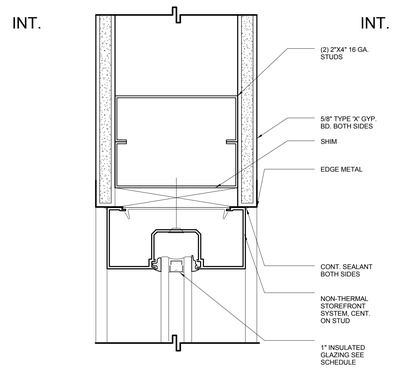

INT WDO WALL SYS., HEAD, JAMB SIM, STL STUDS | SCALE: 6" = 1'-0" | 5

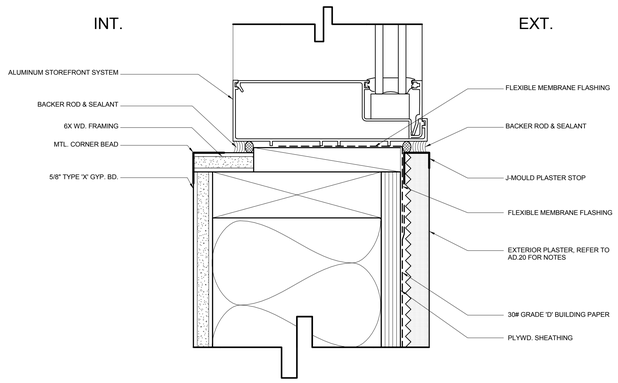

WINDOW WALL SYSTEM @ WOOD SILL | SCALE: 6" = 1'-0" | 1

THE ABOVE DRAWINGS AND SPECIFICATIONS AND REPORTS RESULTING THEREFROM, SHALL REMAIN THE PROPERTY OF THE ARCHITECT AND NO PART THEREOF SHALL BE CONVEYED OR ORGANIZATIONS OR USED IN CONNECTION WITH ANY OTHER WORK OR PROJECT OTHER THAN THE SPECIFIC PROJECT FOR WHICH THEY HAVE BEEN PREPARED AND DEVELOPED, WITHOUT THE WRITTEN CONSENT OF THE ARCHITECT. VISUAL CONTACT WITH THESE DRAWINGS AND SPECIFICATIONS SHALL CONSTITUTE CONCLUSIVE EVIDENCE OF ACCEPTANCE OF THESE RESTRICTIONS.

NO.	REVISIONS	DATE
01	PLAN CHECK REVISIONS	06/06/2016

LICENSED ARCHITECT
STEPHEN M. ALBERT
NO. C 9412
REN. 5-31-13
STATE OF CALIFORNIA

1833 N. GAREY AVE.

1833 NORTH GAREY AVENUE
PAMONA, CALIFORNIA 91767

ARCHITECTURAL DETAILS - WINDOWS

the albert group architects
24322 Steiner Ave | Los Angeles, CA 90223 310.839.8555

C.U.P NUMBER:

PROJECT NUMBER: 14130

PROJECT STATUS: PLAN CHECK RESUBMITTAL

ISSUE DATE: 07/18/2016

SHEET NUMBER: AD.41

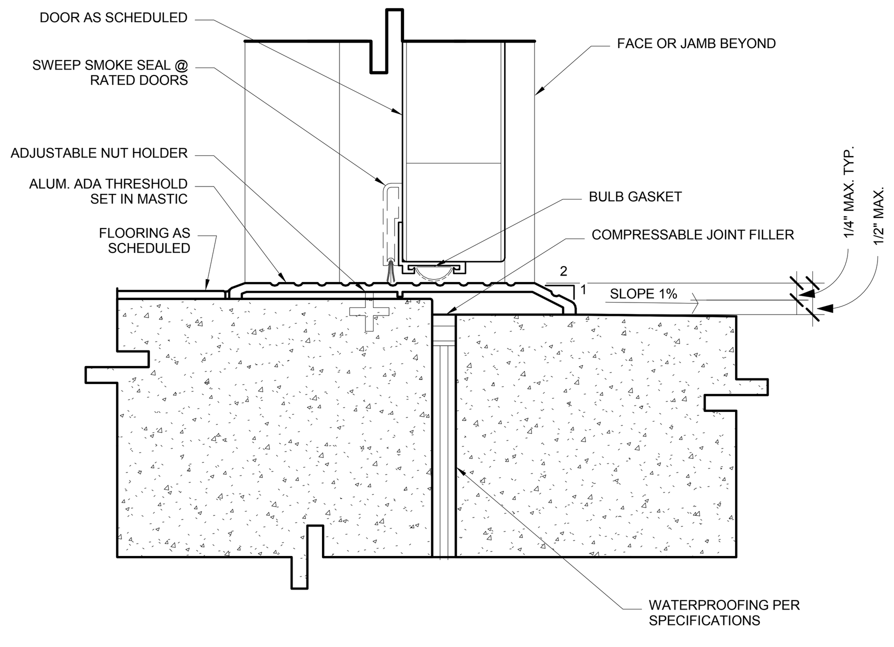

EXTERIOR THRESHOLD @ SIDEWALK | SCALE: 6" = 1'-0" | 20

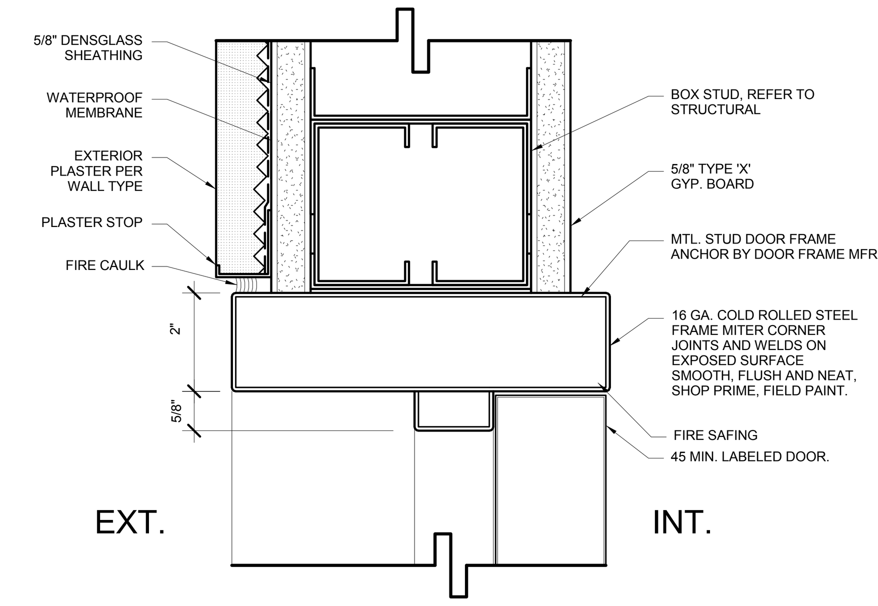

HM DOOR FRAME HEAD @ 1HR EXT WALL | SCALE: 6" = 1'-0" | 16

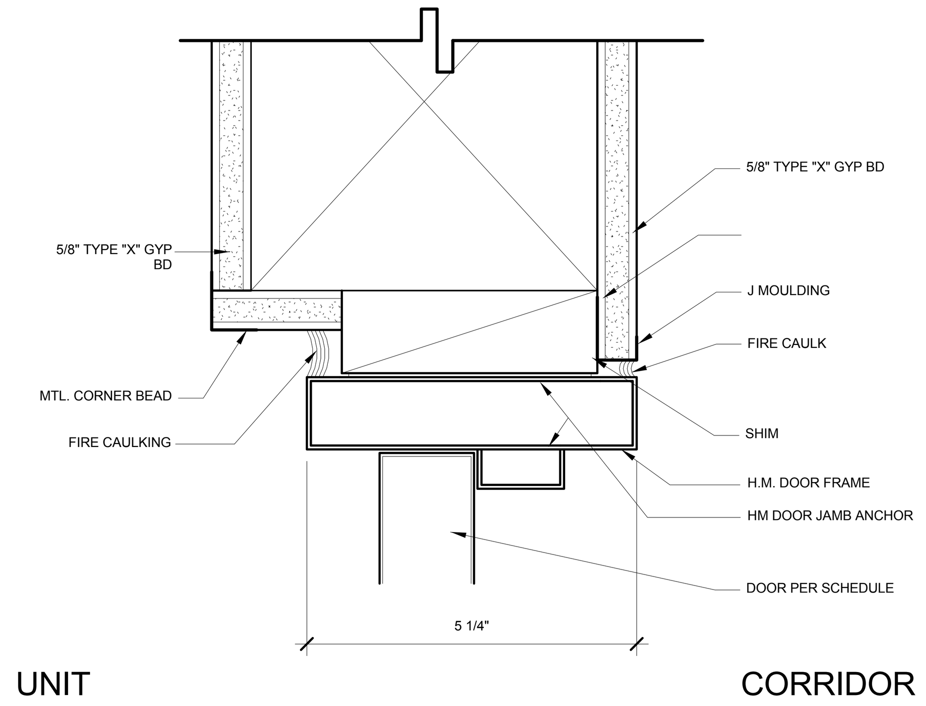

1 HR CORRIDOR DOOR HEAD, JAMB SIM | SCALE: 6" = 1'-0" | 12

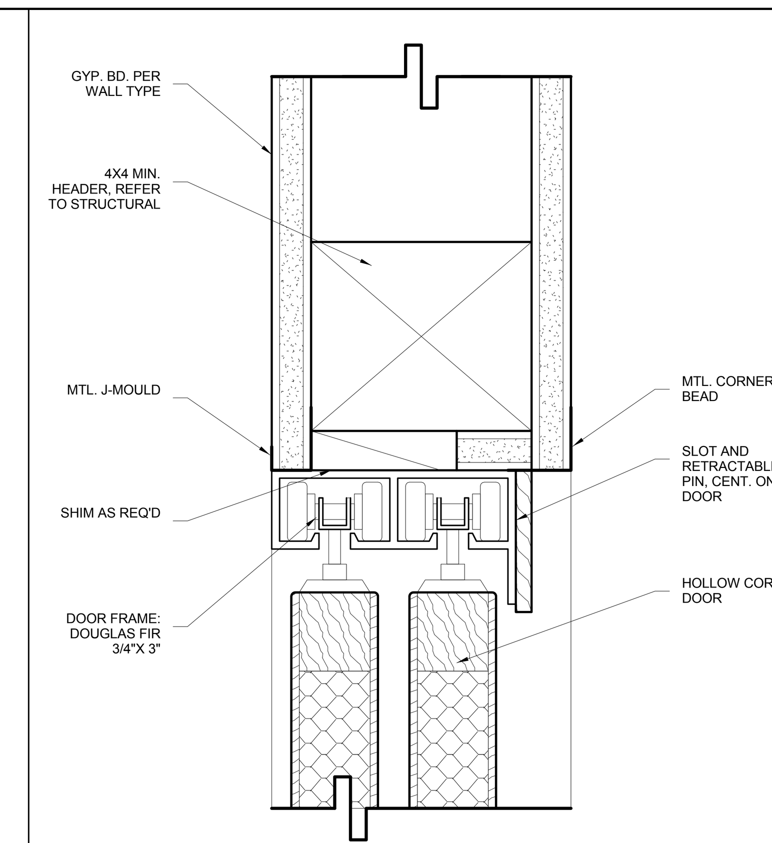

INTERIOR SLIDING DOOR HEAD | SCALE: 6" = 1'-0" | 8

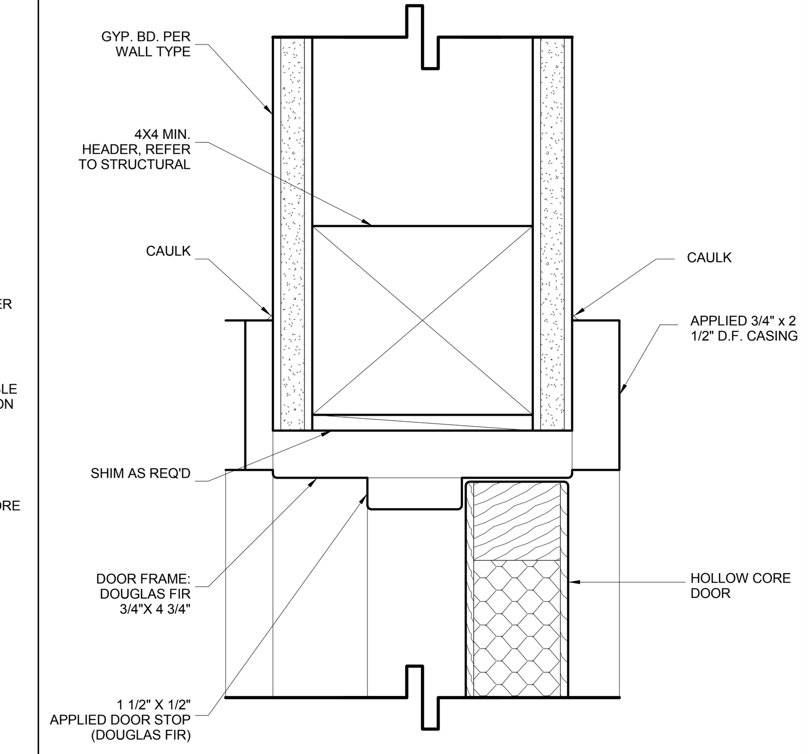

INTERIOR DOOR HEAD, JAM SIM | SCALE: 6" = 1'-0" | 4

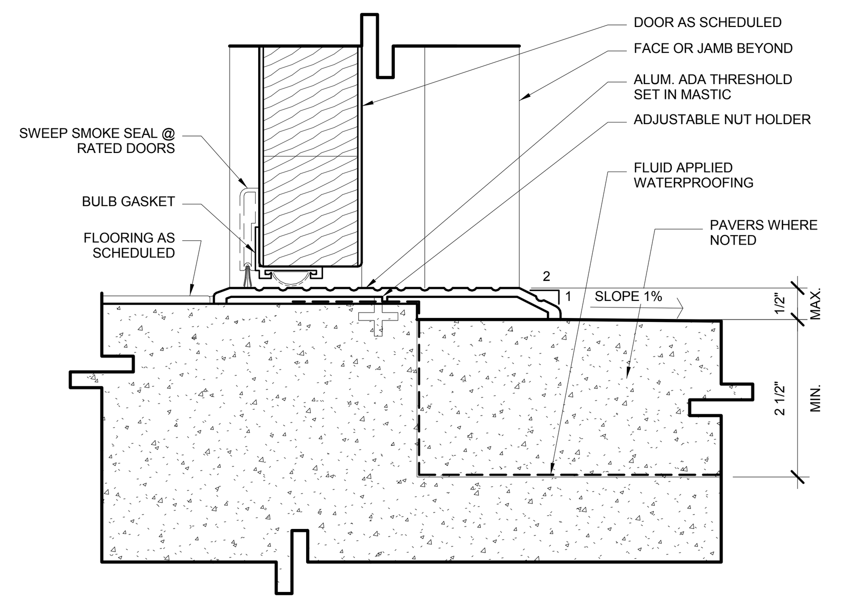

DOOR THRESHOLD @ EXTERIOR DOOR, CONC DECK | SCALE: 6" = 1'-0" | 19

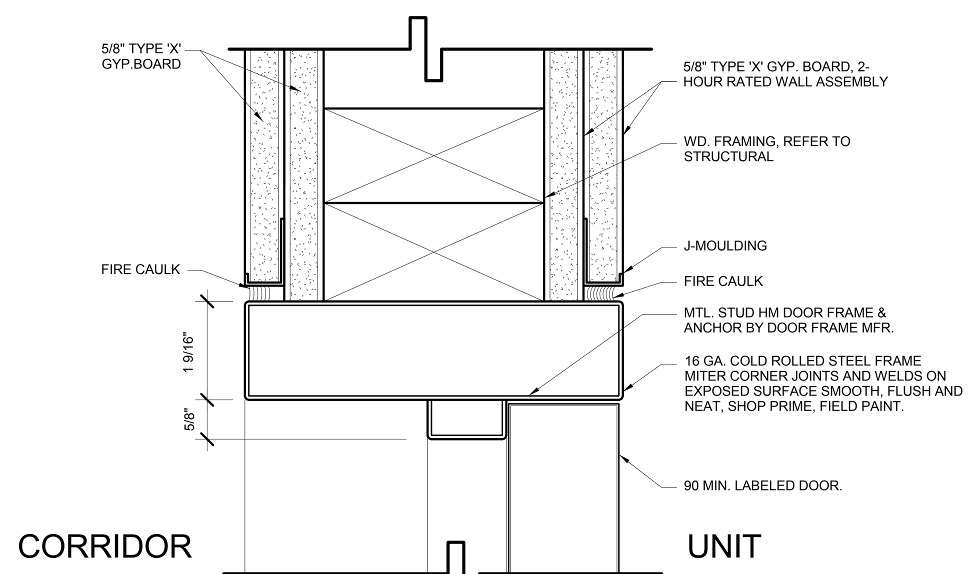

HM DOOR FRAME HEAD @ 2 HR WD FRAME WALL | SCALE: 6" = 1'-0" | 15

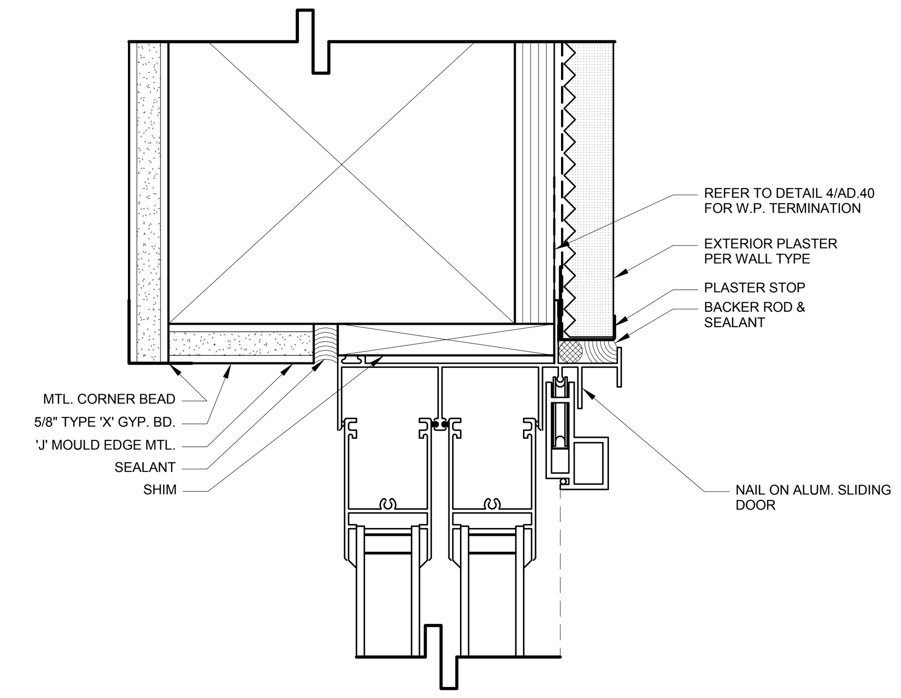

PATIO/BALCONY DOOR HEAD | SCALE: 6" = 1'-0" | 11

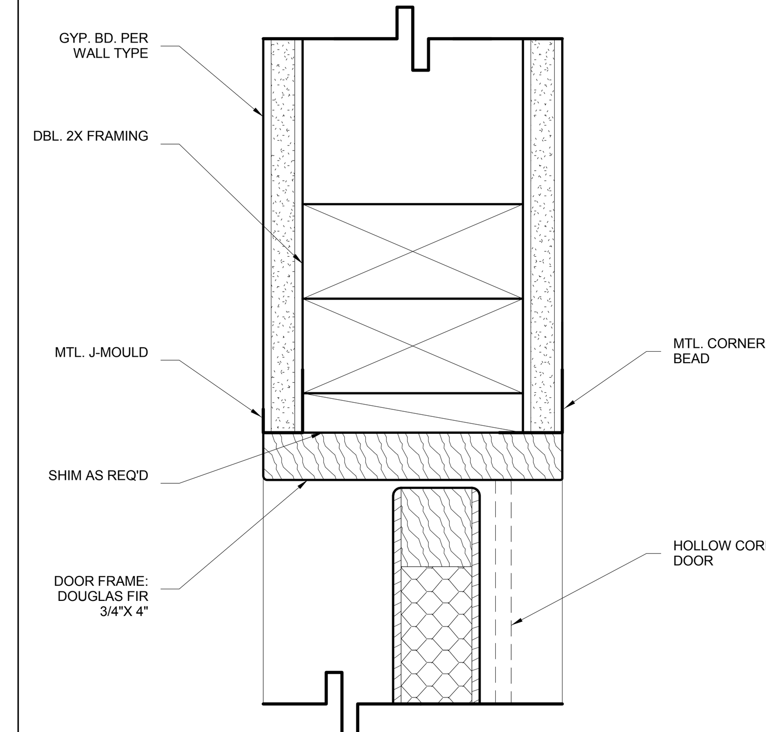

INTERIOR SLIDING DOOR JAMB | SCALE: 6" = 1'-0" | 7

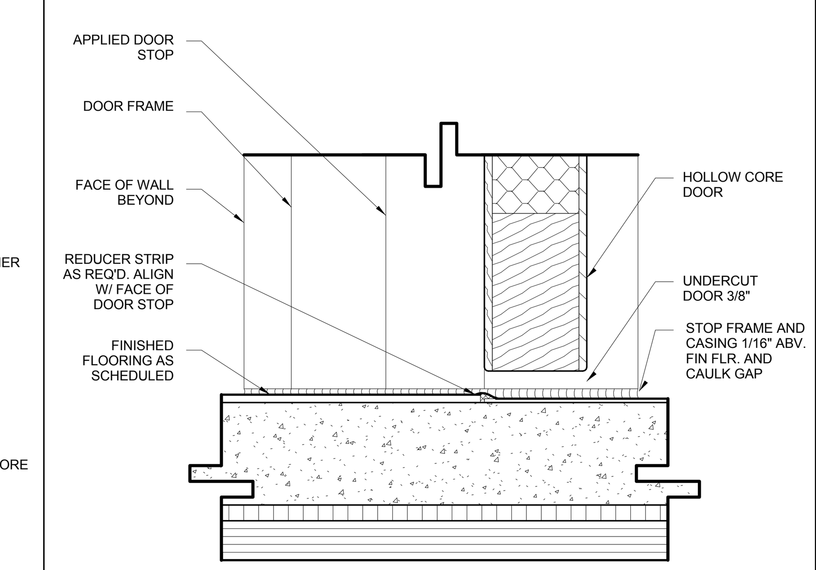

INTERIOR DOOR THRESHOLD | SCALE: 6" = 1'-0" | 3

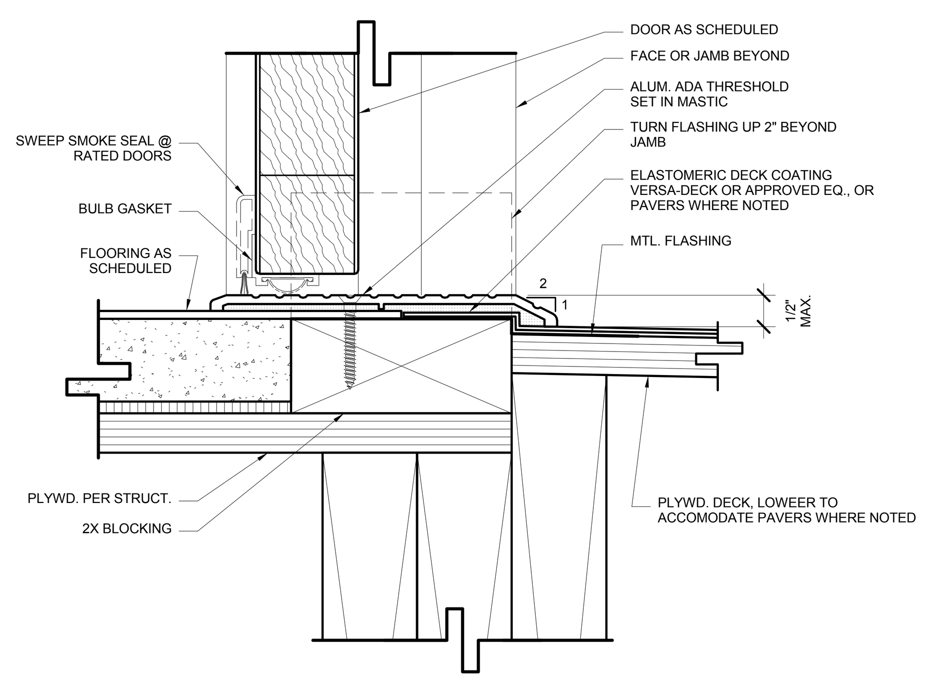

DOOR THRESHOLD @ EXTERIOR DOOR | SCALE: 6" = 1'-0" | 18

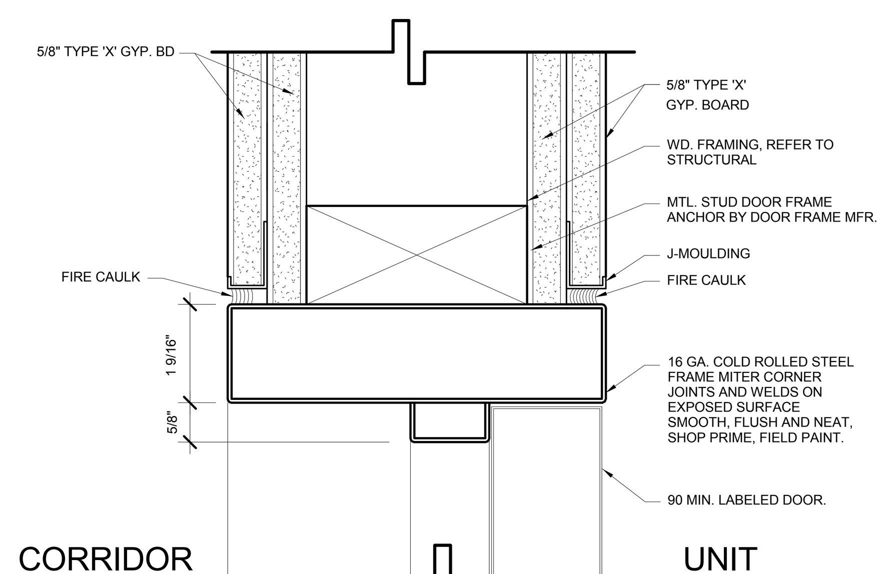

HM DOOR FRAME JAMB @ 2 HR WD FRAME WALL | SCALE: 6" = 1'-0" | 14

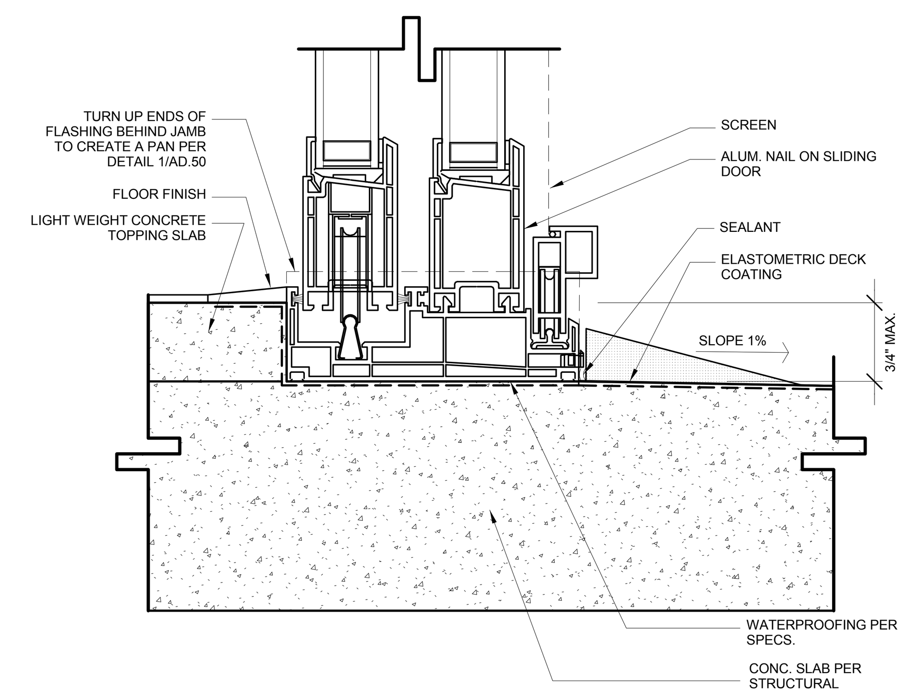

PATIO DOOR THRESHOLD @ PODIUM DECK | SCALE: 6" = 1'-0" | 10

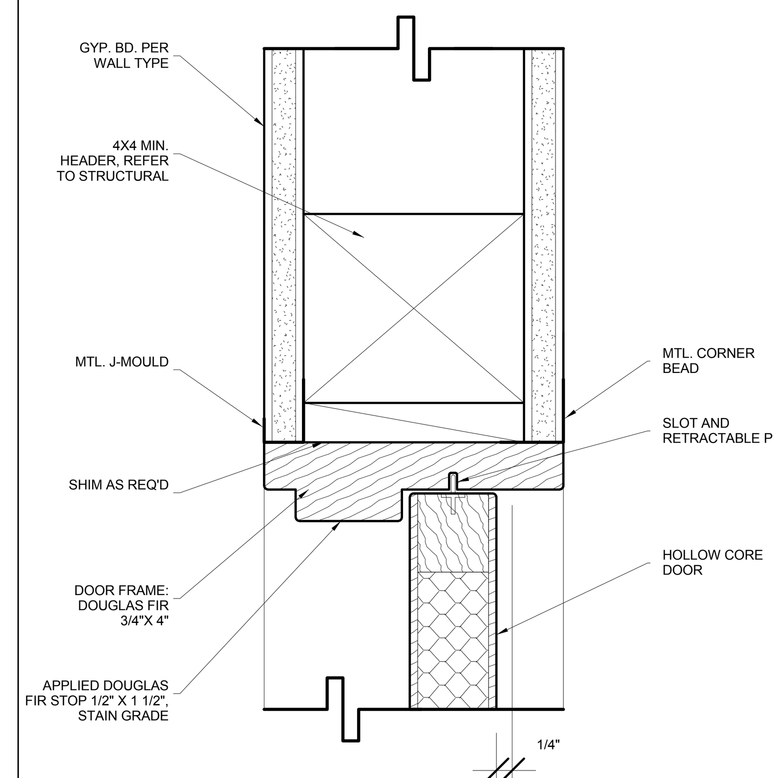

BI-FOLD DOOR HEAD | SCALE: 6" = 1'-0" | 6

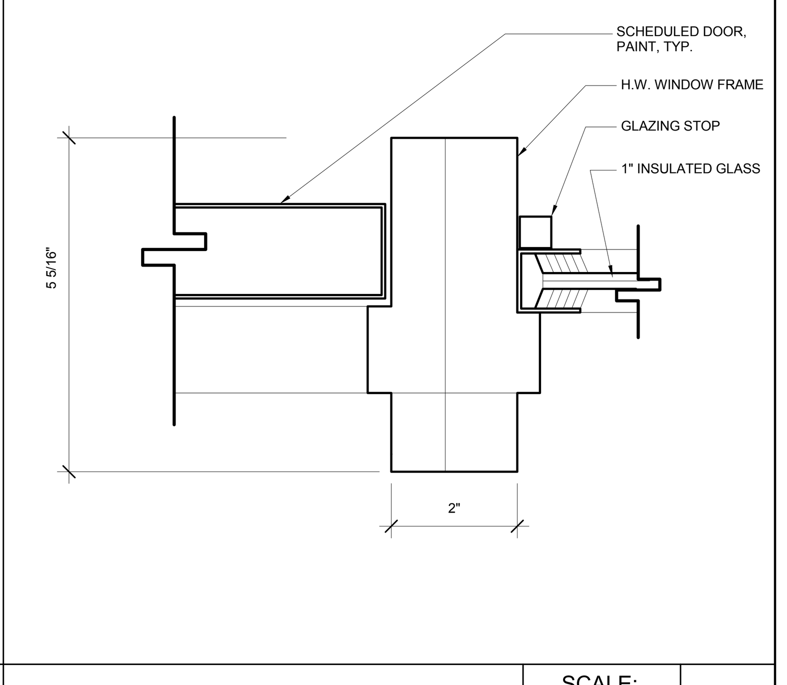

SIDELIGHT CENTER STYLE | SCALE: 6" = 1'-0" | 2

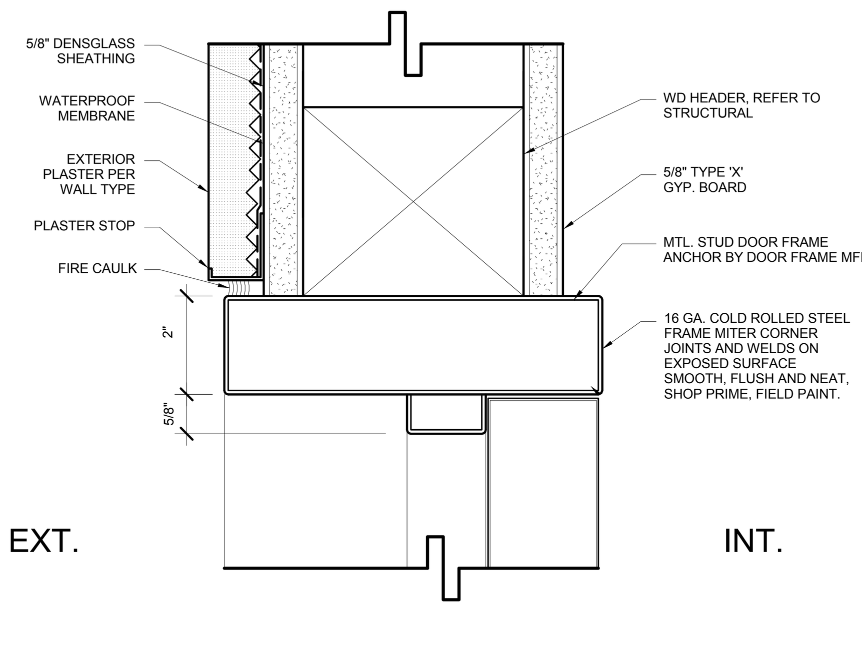

HM DOOR FRAME HEAD @ EXT WALL | SCALE: 6" = 1'-0" | 17

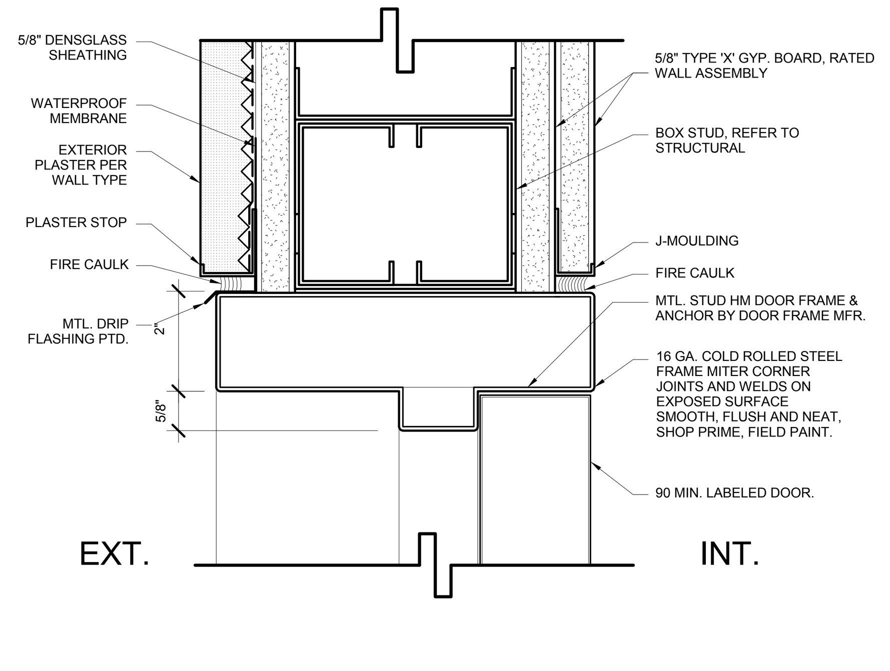

HM DOOR FRM JAMB @ 2 HR EXT METAL STUD WALL | SCALE: 6" = 1'-0" | 13

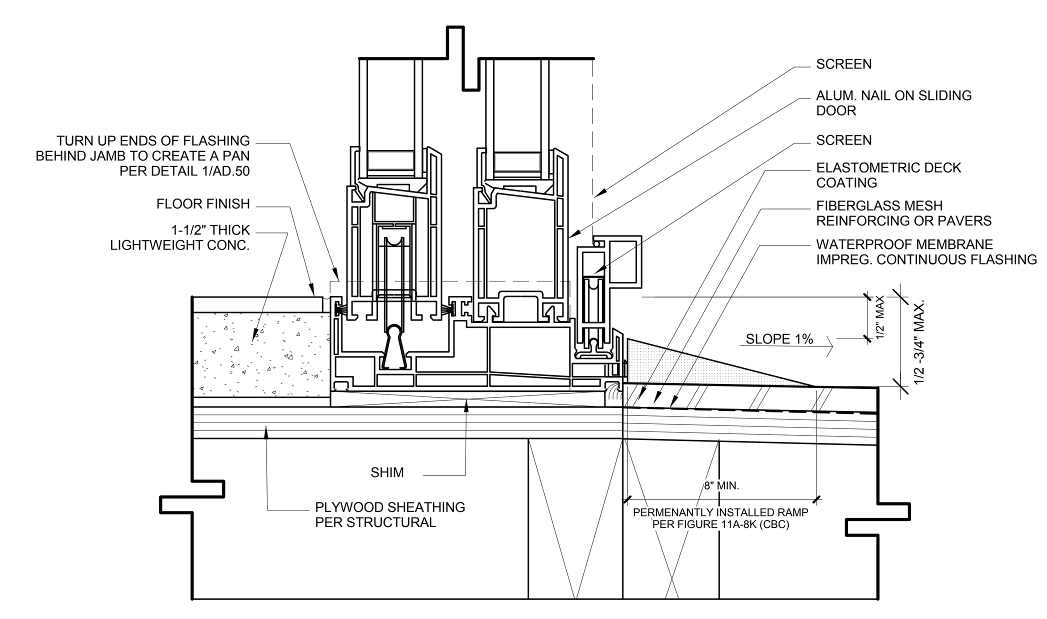

PATIO DOOR THRESHOLD | SCALE: 6" = 1'-0" | 9

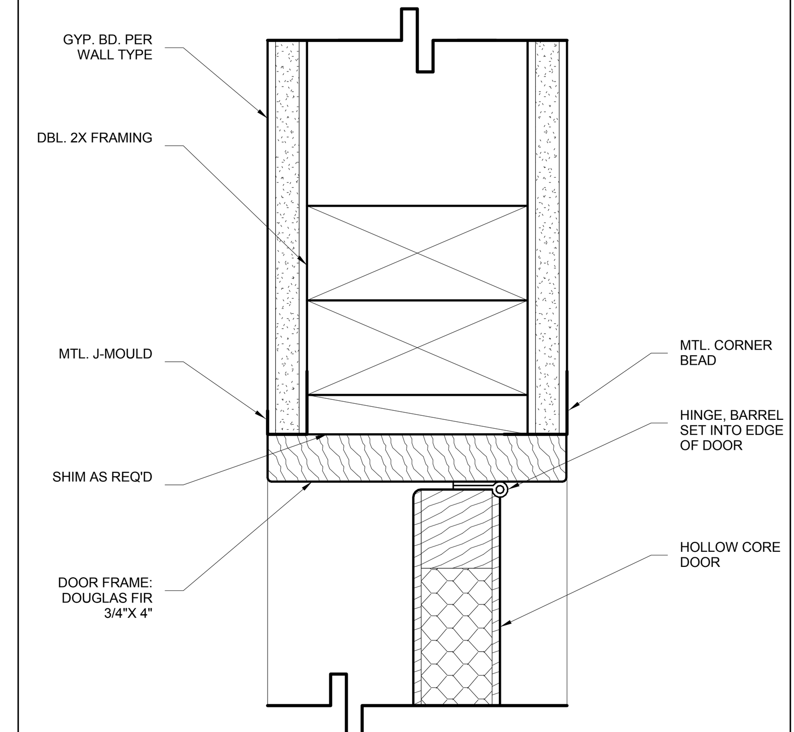

BI-FOLD DOOR JAMB | SCALE: 6" = 1'-0" | 5

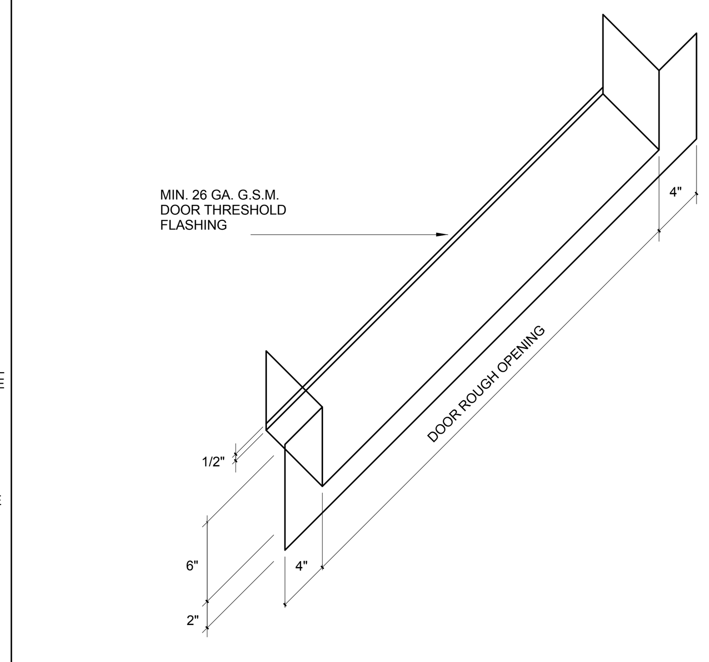

PATIO DOOR THRSHLD FLASHING | SCALE: N.T.S. | 1

THE ABOVE DRAWINGS AND SPECIFICATIONS AND IDEAS, DESIGNS AND ARRANGEMENTS REPRESENTED THEREBY ARE AND SHALL REMAIN THE PROPERTY OF THE ARCHITECT AND NO PART THEREOF SHAL BE COPIED DISCLOSED TO OTHERS OR USED IN CONNECTION WITH ANY OTHER WORK OR PROJECT OTHER THAN THE SPECIFIC PROJECT FOR WHICH THEY HAVE BEEN PREPARED AND DEVELOPED, WITHOUT THE WRITTEN CONSENT OF THE ARCHITECT. VISUAL CONTACT WITH THESE DRAWINGS OR SPECIFICATIONS SHALL CONSTITUTE CONCLUSIVE EVIDENCE OF ACCEPTANCE OF THESE RESTRICTIONS.

NO.	REVISIONS	DATE
01	PLAN CHECK REVISIONS	06/06/2016

LICENSED ARCHITECT
STEPHEN M. ALBERT
NO. C 9412
REN. 5-31-13
STATE OF CALIFORNIA

1833 N. GAREY AVE.

1833 NORTH GAREY AVENUE
PAMONA, CALIFORNIA 91767

ARCHITECTURAL DETAILS - DOORS

the albert group architects
2032 Stoner Ave | Los Angeles, CA 90025 310.820.8863

C.U.P NUMBER:

PROJECT NUMBER: 14130

PROJECT STATUS: PLAN CHECK RESUBMITTAL

ISSUE DATE: 07/18/2016

SHEET NUMBER: AD.50

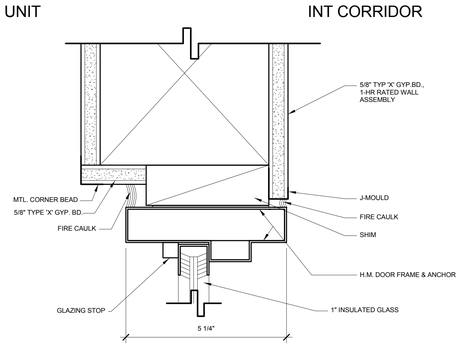

HM DOOR SIDELITE HEAD, JAMB SIM | SCALE: 6" = 1'-0" | 12

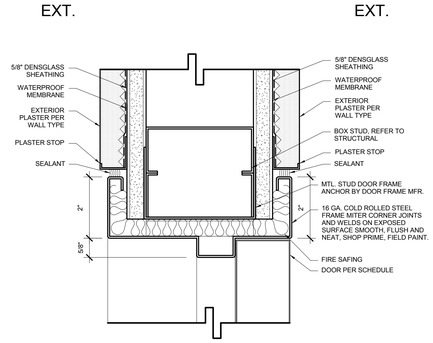

HM DOOR FRAME JAMB @ EXT WALL | SCALE: 6" = 1'-0" | 8

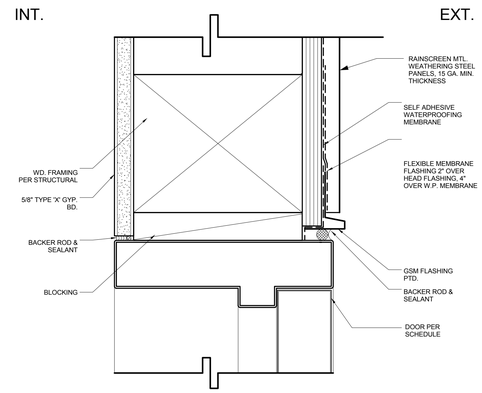

HM DOOR FRAME HEAD @ RAIN SCREEN | SCALE: 6" = 1'-0" | 4

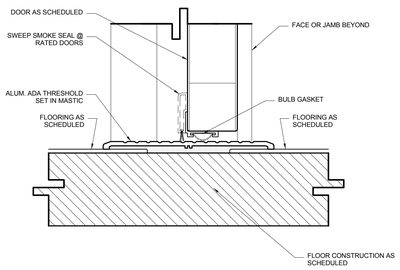

INTERIOR THRESHOLD | SCALE: 6" = 1'-0" | 15

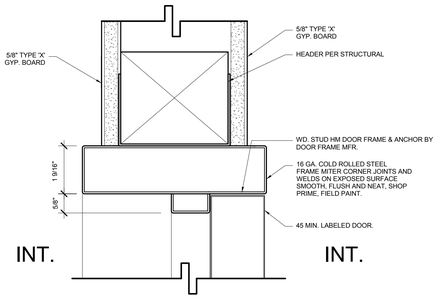

HM DOOR FRAME HEAD @ 1HR INT WD STUD WALL | SCALE: 6" = 1'-0" | 11

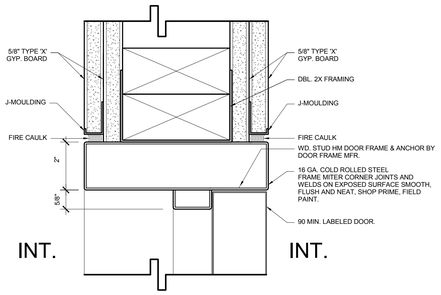

HM DOOR FRAME JAMB @ 2HR INT WALL | SCALE: 6" = 1'-0" | 7

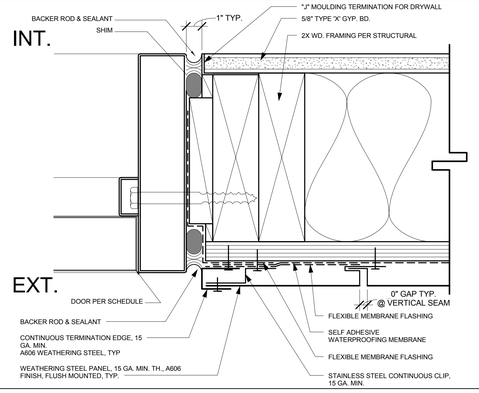

HM DOOR FRAME JAMB @ RAIN SCREEN | SCALE: 6" = 1'-0" | 3

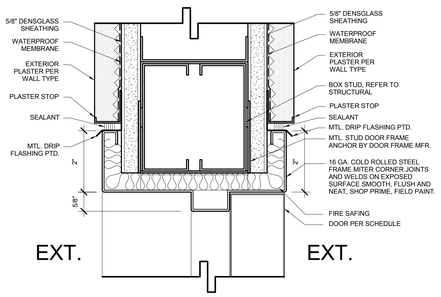

HM DOOR FRAME HEAD @ EXT WALLS | SCALE: 6" = 1'-0" | 14

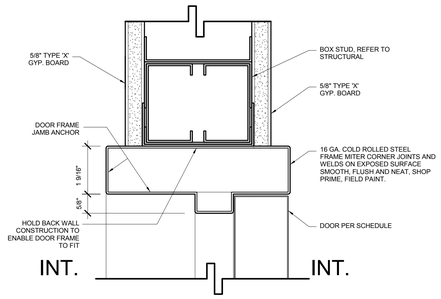

HM DOOR FRAME HEAD @ INT STL STUD WALL | SCALE: 6" = 1'-0" | 10

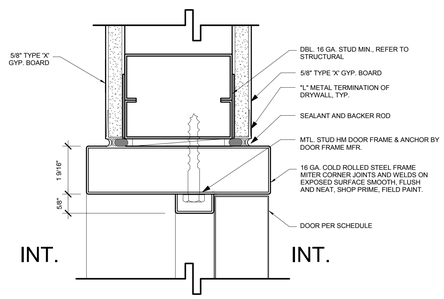

HM DOOR FRAME JAMB @ INT STL STUD WALL | SCALE: 6" = 1'-0" | 6

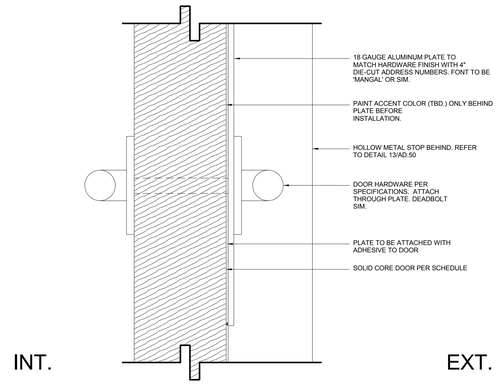

SECTION @ RES. ENTRY DOOR ADDRESS PLATE | SCALE: 12" = 1'-0" | 2

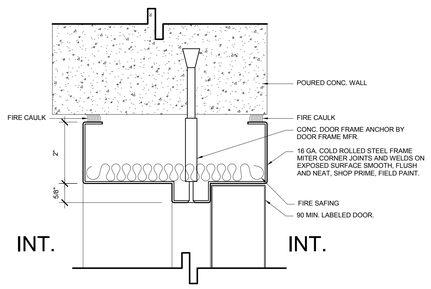

HM DOOR FRAME HEAD @ CONC. WALL, JAMB SIM | SCALE: 6" = 1'-0" | 13

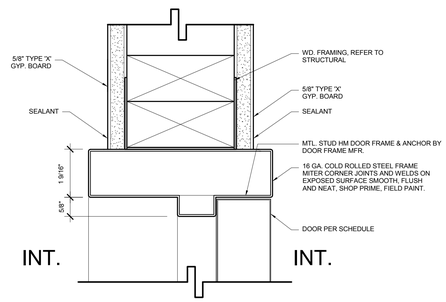

HM DOOR FRAME HEAD @ INT WD STUD WALL | SCALE: 6" = 1'-0" | 9

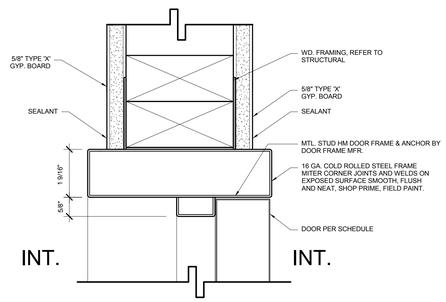

HM DOOR FRAME JAMB @ INT WD STUD WALL | SCALE: 6" = 1'-0" | 5

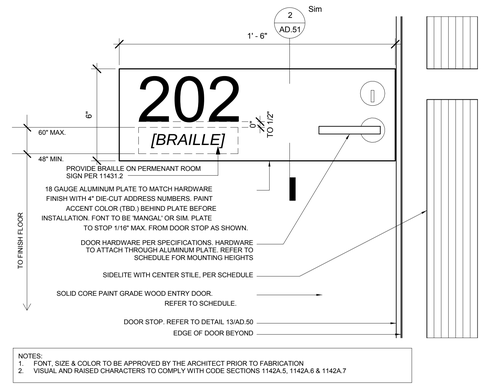

NOTES:
1. FONT, SIZE & COLOR TO BE APPROVED BY THE ARCHITECT PRIOR TO FABRICATION
2. VISUAL AND RAISED CHARACTERS TO COMPLY WITH CODE SECTIONS 1142A.5, 1142A.6 & 1142A.7

RESIDENTIAL ENTRY DOOR ADDRESS PLATE | SCALE: 3" = 1'-0" | 1

THE ABOVE DRAWINGS AND SPECIFICATIONS AND REPRESENTATIONS HEREIN ARE AND SHALL REMAIN THE PROPERTY OF THE ARCHITECT AND NO PART THEREOF SHALL BE COPIED, DISCLOSED TO OTHERS OR USED IN CONNECTION WITH ANY OTHER WORK OR PROJECT OTHER THAN THE SPECIFIC PROJECT FOR WHICH THEY HAVE BEEN PREPARED AND DEVELOPED, WITHOUT THE WRITTEN CONSENT OF THE ARCHITECT. VISUAL CONTACT WITH THESE DRAWINGS AND SPECIFICATIONS SHALL CONSTITUTE CONCLUSIVE EVIDENCE OF ACCEPTANCE OF THESE RESTRICTIONS.

NO.	REVISIONS	DATE
01	PLAN CHECK REVISIONS	06/06/2016

LICENSED ARCHITECT
STEPHEN M. ALBERT
NO. C 9412
REN. 5-31-13
STATE OF CALIFORNIA

1833 N. GAREY AVE.

1833 NORTH GAREY AVENUE
PAMONA, CALIFORNIA 91767

ARCHITECTURAL DETAILS - DOORS

the albert group architects
24352 Sunset Ave | Los Angeles, CA 91023 310.839.8383

C.U.P NUMBER:

PROJECT NUMBER: 14130

PROJECT STATUS: PLAN CHECK RESUBMITTAL

ISSUE DATE: 07/18/2016

SHEET NUMBER: AD.51

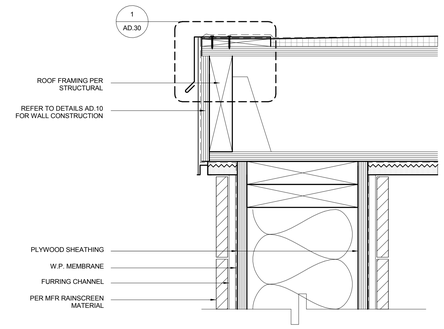

RAINSCREEN @ ROOF W/ OR W/OUT PARAPET | SCALE: 3" = 1'-0" | 18

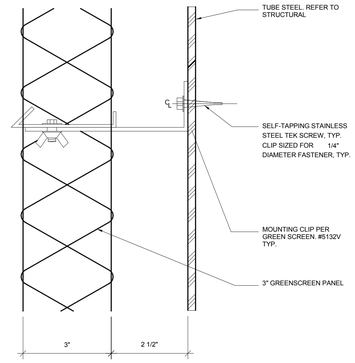

GREENSCREEN DETAIL SECTION | SCALE: 6" = 1'-0" | 14

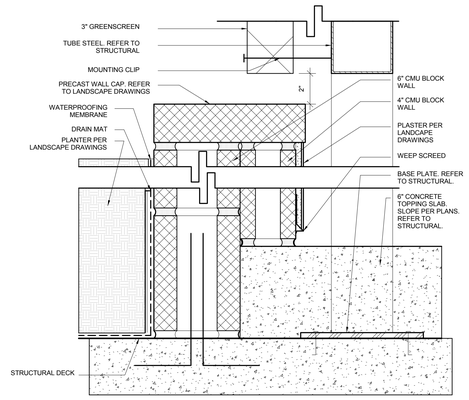

GREENSCREEN @ PLANTER | SCALE: 3" = 1'-0" | 10

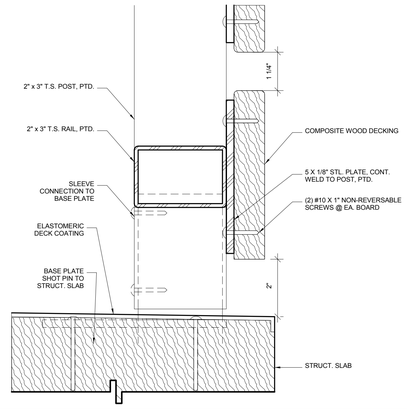

WOOD SCREEN CENTER POST | SCALE: 6" = 1'-0" | 6

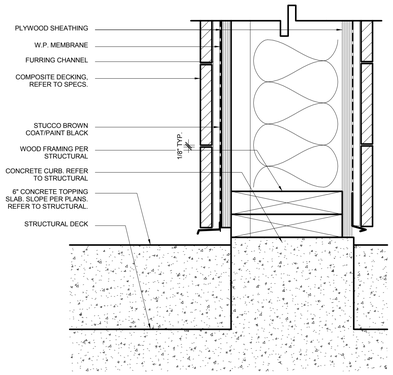

RAINSCREEN @ DECK | SCALE: 3" = 1'-0" | 17

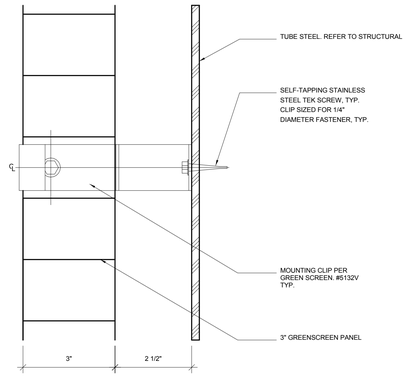

GREENSCREEN DETAIL PLAN | SCALE: 6" = 1'-0" | 13

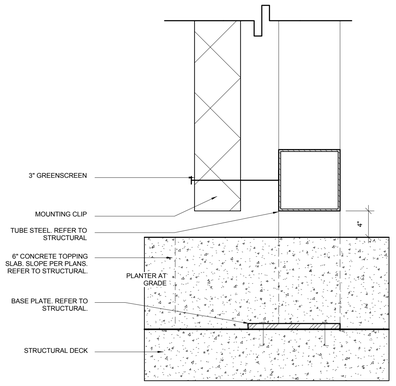

GREENSCREEN @ DECK | SCALE: 3" = 1'-0" | 9

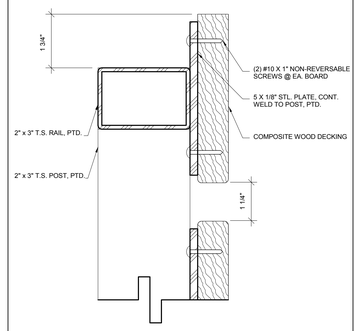

TOP OF RAILING | SCALE: 6" = 1'-0" | 5

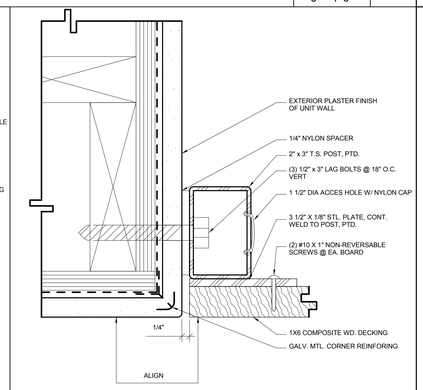

WOOD SCREEN @ WALL | SCALE: 6" = 1'-0" | 4

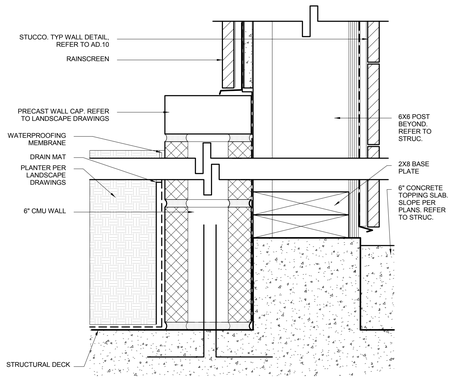

RAINSCREEN @ PLANTER AT PODIUM | SCALE: 3" = 1'-0" | 16

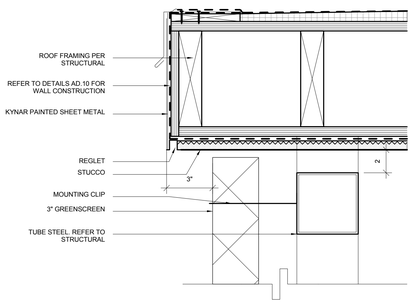

GREENSCREEN @ ROOF OR CANOPY | SCALE: 3" = 1'-0" | 12

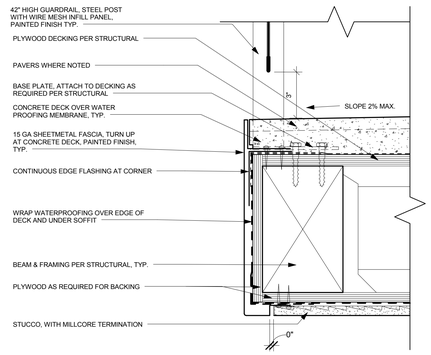

UPPER FLOOR WALKWAY | SCALE: 3" = 1'-0" | 8

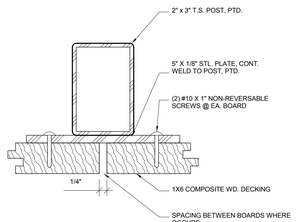

WOOD SCREEN DETAIL | SCALE: 6" = 1'-0" | 3

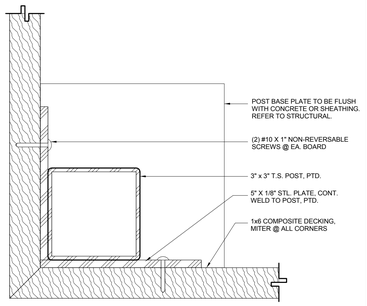

RAILING @ CORNER | SCALE: 6" = 1'-0" | 2

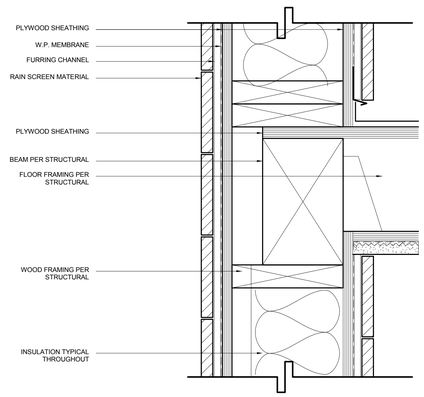

RAINSCREEN | SCALE: 3" = 1'-0" | 15

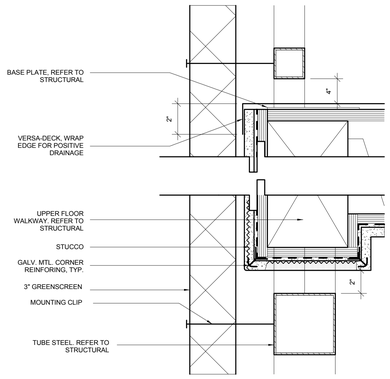

GREENSCREEN @ UPPER FLOOR WALKWAY | SCALE: 3" = 1'-0" | 11

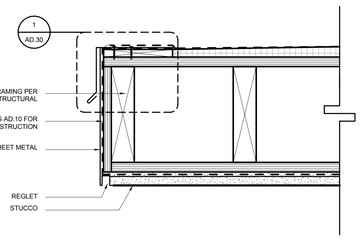

CANOPY @ ELEVATOR OR OVER WALKWAY @ ROOF | SCALE: 3" = 1'-0" | 7

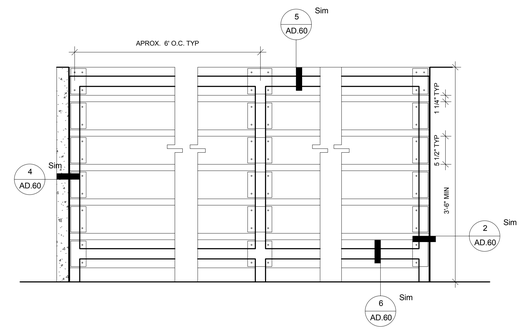

WOOD SCREEN | SCALE: 1" = 1'-0" | 1

THE ABOVE DRAWINGS AND SPECIFICATIONS AND DESIGNS SHOWN THEREON AND THEREIN ARE THE PROPERTY OF THE ARCHITECT AND NO PART THEREOF SHALL BE CONVEYED TO OTHERS OR USED IN CONNECTION WITH ANY OTHER WORK OR PROJECT OTHER THAN THE SPECIFIC PROJECT FOR WHICH THEY HAVE BEEN PREPARED AND DEVELOPED, WITHOUT THE WRITTEN CONSENT OF THE ARCHITECT. VISUAL CONTACT WITH THESE DRAWINGS AND SPECIFICATIONS SHALL CONSTITUTE CONCLUSIVE EVIDENCE OF ACCEPTANCE OF THESE RESTRICTIONS.

NO.	REVISIONS	DATE
01	PLAN CHECK REVISIONS	06/06/2016

LICENSED ARCHITECT
STEPHEN M. ALBERT
NO. C 9412
REN. 5-31-13
STATE OF CALIFORNIA

1833 N. GAREY AVE.

1833 NORTH GAREY AVENUE
PAMONA, CALIFORNIA 91767

ARCHITECTURAL DETAILS - SCREENS

the albert group architects
24352 Skyline Ave | Los Angeles, CA 91023 310.919.8555

C.U.P NUMBER:

PROJECT NUMBER: 14130

PROJECT STATUS: PLAN CHECK RESUBMITTAL

ISSUE DATE: 07/18/2016

SHEET NUMBER: AD.60

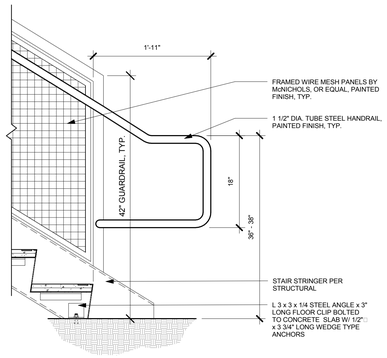

HANDRAIL EXTENSION @ STAIR BASE | SCALE: 1" = 1'-0" | 13

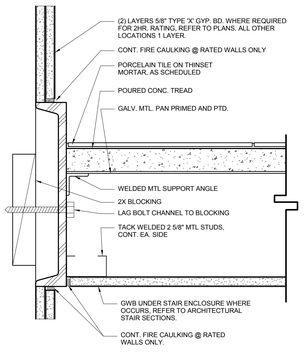

STEEL STAIR STRINGER II | SCALE: 3" = 1'-0" | 9

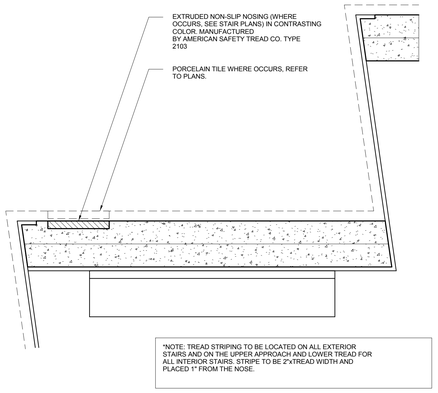

POURED PAN TREAD & WARNING STRIPE | SCALE: 6" = 1'-0" | 5

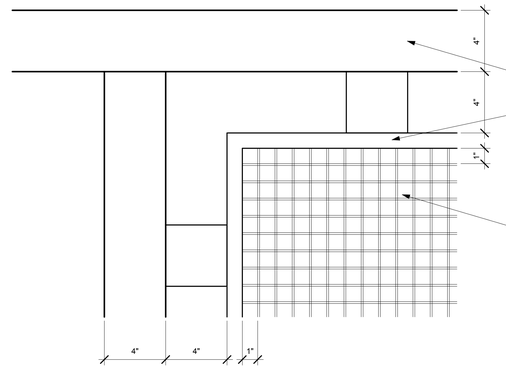

MESH GUARDRAIL, TYP | SCALE: 3" = 1'-0" | 1

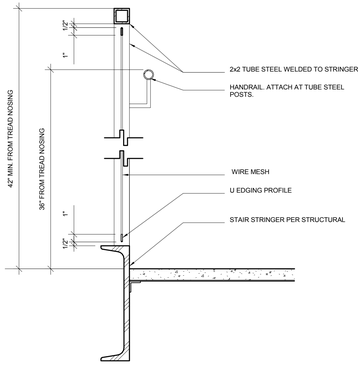

GUARDRAIL SECTION W/ HANDRAIL | SCALE: 1 1/2" = 1'-0" | 12

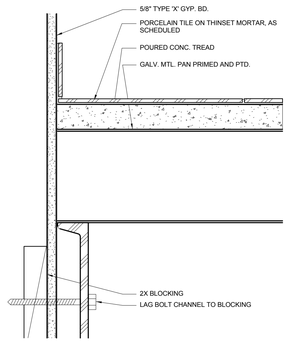

STEEL STAIR STRINGER | SCALE: 3" = 1'-0" | 8

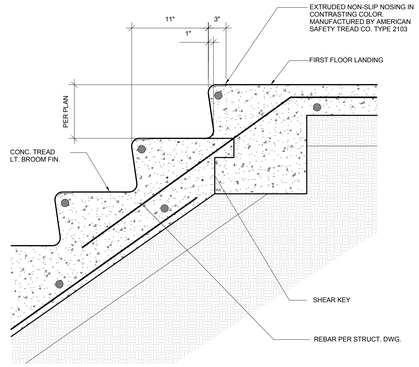

TOP OF CONCRETE STAIR | SCALE: 1 1/2" = 1'-0" | 4

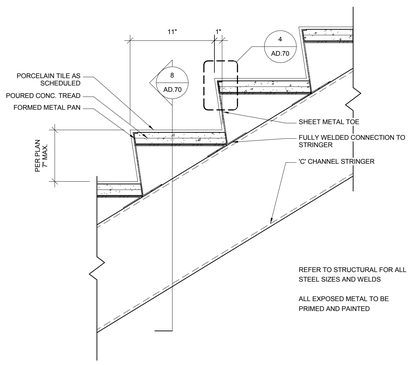

STAIR WITH STRINGER BELOW | SCALE: 1 1/2" = 1'-0" | 11

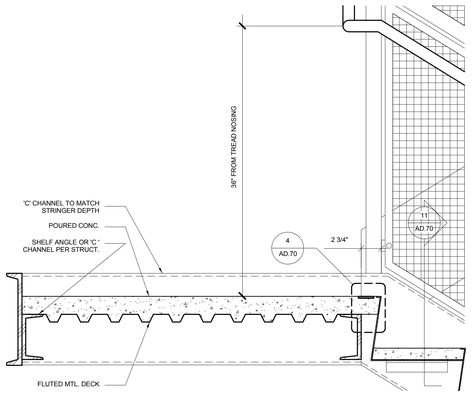

STAIR @ LANDING II | SCALE: 1 1/2" = 1'-0" | 7

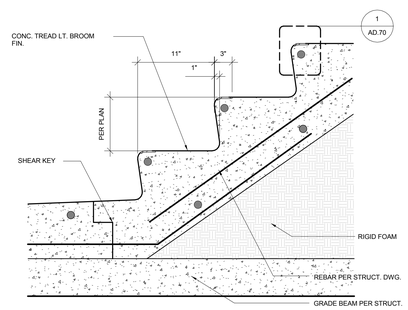

BASE OF CONCRETE STAIR | SCALE: 1 1/2" = 1'-0" | 3

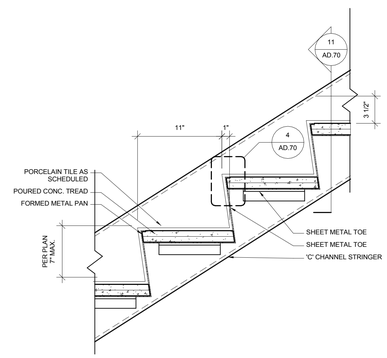

TYP. STAIR & STRINGER | SCALE: 1 1/2" = 1'-0" | 10

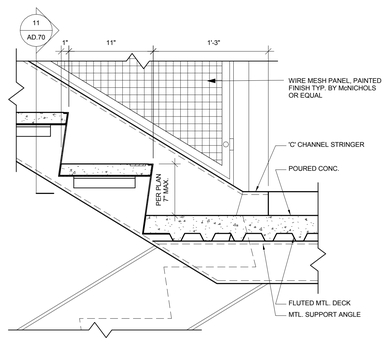

STAIR @ LANDING | SCALE: 1 1/2" = 1'-0" | 6

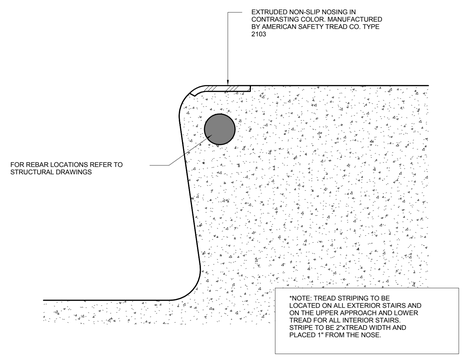

CONCRETE TREAD & WARNING STRIPE | SCALE: 6" = 1'-0" | 2

THE ABOVE DRAWINGS AND SPECIFICATIONS AND REPORTS PREPARED BY THE ALBERT GROUP ARCHITECTS, HEREBY ARE AND SHALL REMAIN THE PROPERTY OF THE ARCHITECT AND NO PART THEREOF SHALL BE CONVEYED OR REPRODUCED OR USED IN CONNECTION WITH ANY OTHER WORK OR PROJECT OTHER THAN THE SPECIFIC PROJECT FOR WHICH THEY HAVE BEEN PREPARED AND DEVELOPED, WITHOUT THE WRITTEN CONSENT OF THE ARCHITECT. VISUAL CONTACT WITH THESE DRAWINGS AND SPECIFICATIONS SHALL CONSTITUTE CONCLUSIVE EVIDENCE OF ACCEPTANCE OF THESE RESTRICTIONS.

NO.	REVISIONS	DATE
01	PLAN CHECK REVISIONS	06/06/2016

LICENSED ARCHITECT
STEPHEN M. ALBERT
NO. C 9412
REN. 5-31-13
STATE OF CALIFORNIA

1833 N. GAREY AVE.

1833 NORTH GAREY AVENUE
PAMONA, CALIFORNIA 91767

ARCHITECTURAL DETAILS - STAIRS & HANDRAILS

the albert group architects
24932 Steiner Ave | Lake Arrowhead, CA 92352 | 310.930.8555

C.U.P NUMBER:

PROJECT NUMBER: 14130

PROJECT STATUS: PLAN CHECK RESUBMITTAL

ISSUE DATE: 07/18/2016

SHEET NUMBER: AD.70

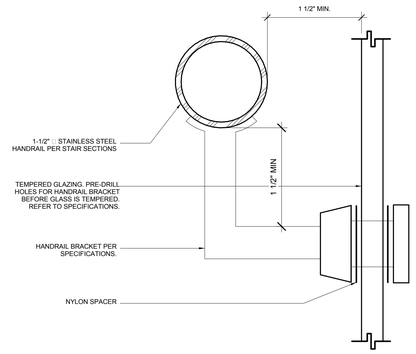

HANDRAIL BRACKET DETAIL @ GLAZING | SCALE: 12" = 1'-0" | **4**

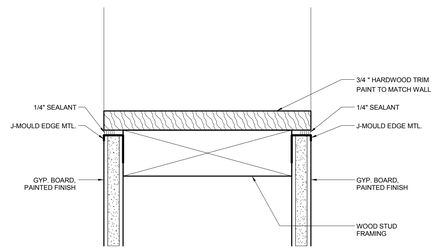

SILL @ LOW WALL | SCALE: 6" = 1'-0" | **7**

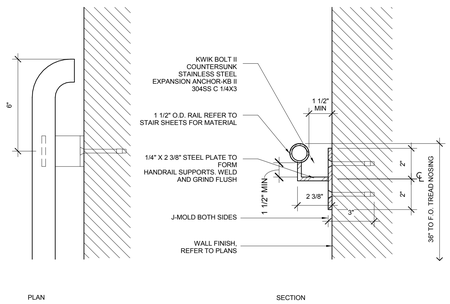

HAND RAIL @ POURED CONCRETE | SCALE: 3" = 1'-0" | **3**

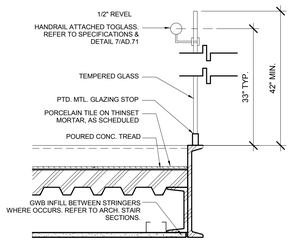

STAIR RAILING, GLASS | SCALE: 1 1/2" = 1'-0" | **6**

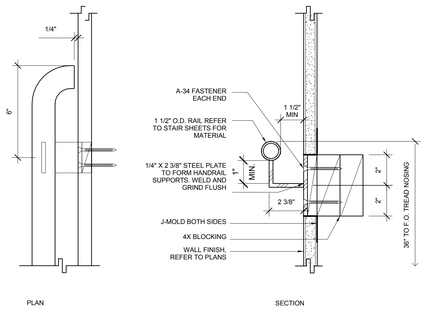

HAND RAIL @ WOOD FRAMING | SCALE: 3" = 1'-0" | **2**

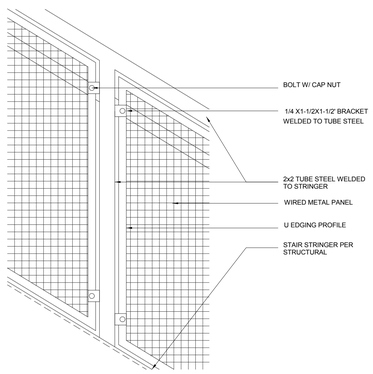

GUARD RAIL | SCALE: 1 1/2" = 1'-0" | **5**

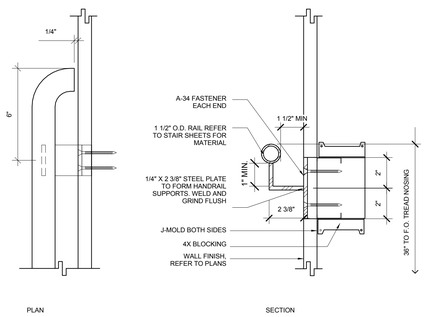

HAND RAIL @ METAL FRAMING | SCALE: 3" = 1'-0" | **1**

THE ABOVE DRAWINGS AND SPECIFICATIONS AND REPORTS RESULTING THEREFROM, SHALL REMAIN THE PROPERTY OF THE ARCHITECT AND NO PART THEREOF SHALL BE CONVEYED TO ANY OTHER PERSON OR USED IN CONNECTION WITH ANY OTHER WORK OR PROJECT OTHER THAN THE SPECIFIC PROJECT FOR WHICH THEY HAVE BEEN PREPARED AND DEVELOPED, WITHOUT THE WRITTEN CONSENT OF THE ARCHITECT. VISUAL CONTACT WITH THESE DRAWINGS OR SPECIFICATIONS SHALL CONSTITUTE CONCLUSIVE EVIDENCE OF ACCEPTANCE OF THESE RESTRICTIONS.

NO.	REVISIONS	DATE
01	PLAN CHECK REVISIONS	06/06/2016

LICENSED ARCHITECT
STEPHEN M. ALBERT
NO. C 9412
REN. 5-31-13
STATE OF CALIFORNIA

1833 N. GAREY AVE.

1833 NORTH GAREY AVENUE
PAMONA, CALIFORNIA 91767

ARCHITECTURAL DETAILS - STAIRS & HANDRAILS

the albert group architects
24322 Steiner Ave | Los Angeles, CA 91023 310.919.8555

C.U.P NUMBER:

PROJECT NUMBER: 14130

PROJECT STATUS: PLAN CHECK RESUBMITTAL

ISSUE DATE: 07/18/2016

SHEET NUMBER: AD.71

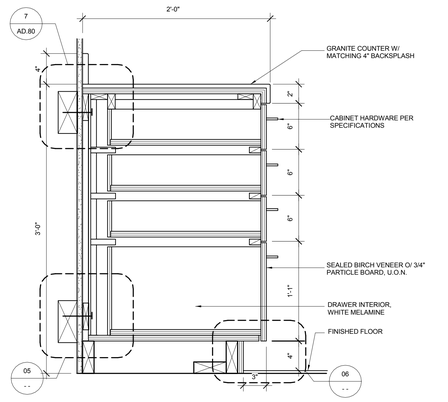

CABINET DRAWERS SECTION

SCALE: 1 1/2" = 1'-0" | 6

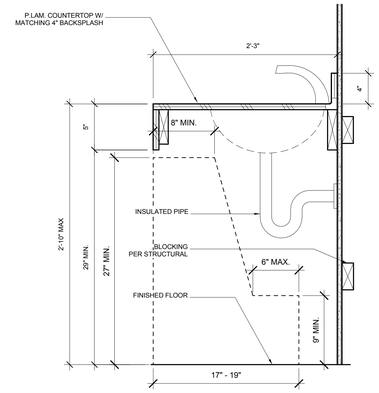

SINK AND COUNTER

SCALE: 1 1/2" = 1'-0" | 3

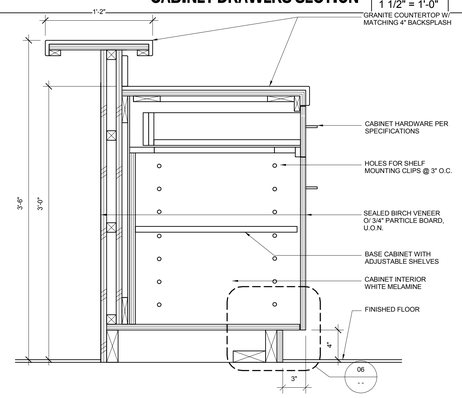

CABINET SECTION @ BAR COUNTER

SCALE: 1 1/2" = 1'-0" | 5

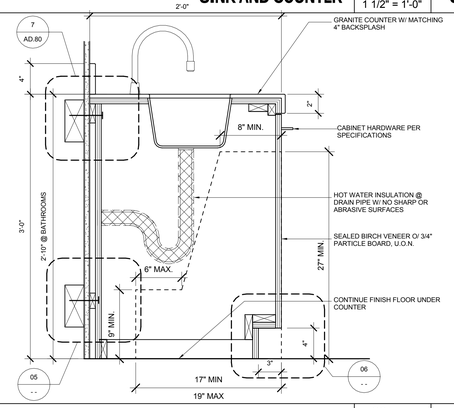

ADA ACCESSIBLE SINK CABINET SECTION

SCALE: 1 1/2" = 1'-0" | 2

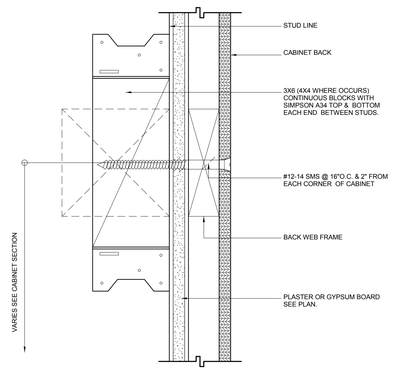

CABINET BRACING AT WALL II

SCALE: 6" = 1'-0" | 8

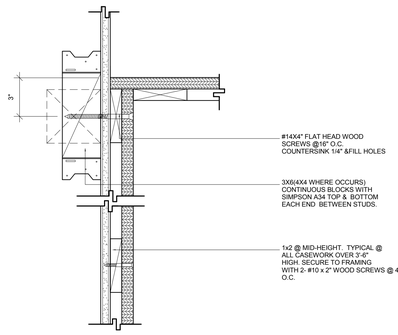

CABINET BRACING AT WALL

SCALE: 3" = 1'-0" | 7

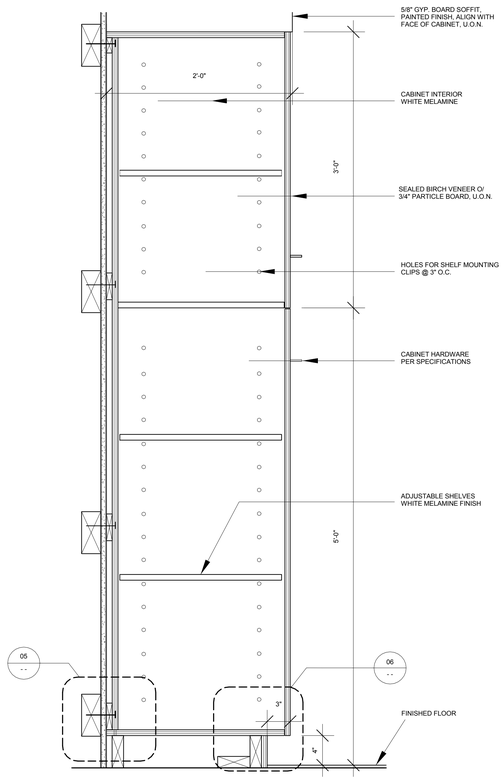

FULL-HEIGHT CABINET @ KITCHEN

SCALE: 1 1/2" = 1'-0" | 4

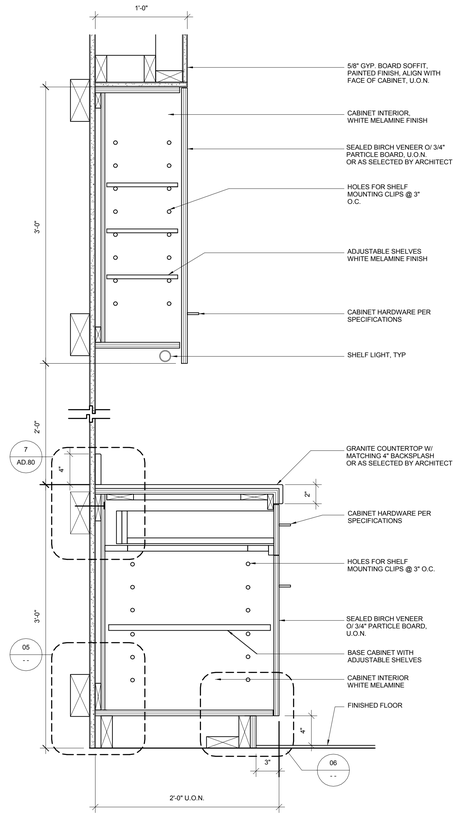

UPPER AND LOWER CABINET TYPICAL

SCALE: 1 1/2" = 1'-0" | 1

THE ABOVE DRAWINGS AND SPECIFICATIONS AND REPRESENTATIONS HEREIN ARE AND SHALL REMAIN THE PROPERTY OF THE ARCHITECT AND NO PART THEREOF SHALL BE COPIED, DISCLOSED TO OTHERS OR USED IN CONNECTION WITH ANY OTHER WORK OR PROJECT OTHER THAN THE SPECIFIC PROJECT FOR WHICH THEY HAVE BEEN PREPARED AND DEVELOPED, WITHOUT THE WRITTEN CONSENT OF THE ARCHITECT. VISUAL CONTACT WITH THESE DRAWINGS OR SPECIFICATIONS SHALL CONSTITUTE CONCLUSIVE EVIDENCE OF ACCEPTANCE OF THESE RESTRICTIONS.

NO.	REVISIONS	DATE
01	PLAN CHECK REVISIONS	06/06/2016

LICENSED ARCHITECT
STEPHEN M. ALBERT
NO. C 9412
REN. 5-31-13
STATE OF CALIFORNIA

1833 N. GAREY AVE.

1833 NORTH GAREY AVENUE
PAMONA, CALIFORNIA 91767

ARCHITECTURAL DETAILS - CABINETRY

the albert group architects
24932 Stanser Ave | Los Angeles, CA 910723 310.930.8955

C.U.P NUMBER:

PROJECT NUMBER: 14130

PROJECT STATUS: PLAN CHECK RESUBMITTAL

ISSUE DATE: 07/18/2016

SHEET NUMBER: AD.80

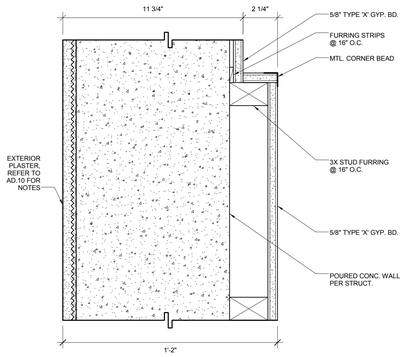

FURRING CONCRETE WALL | SCALE: 3" = 1'-0" | **8**

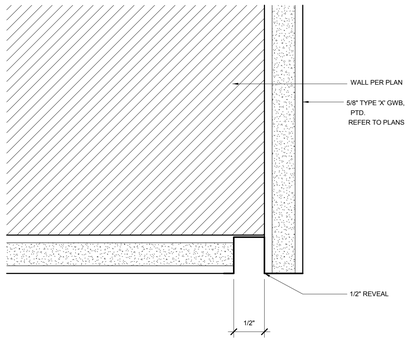

REVEAL @ INTERIOR SOFFIT | SCALE: 12" = 1'-0" | **4**

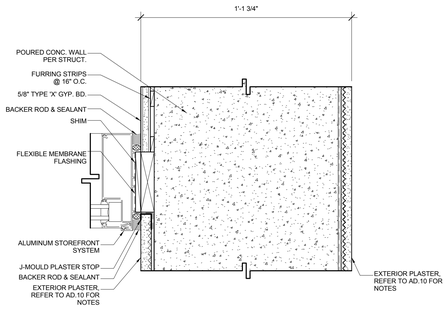

CONCRETE WALL FINISH | SCALE: 3" = 1'-0" | **7**

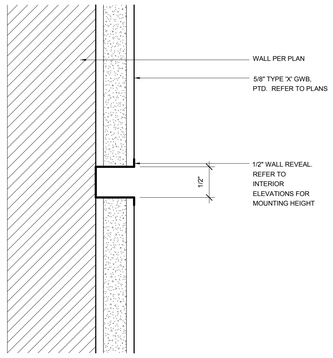

INTERIOR WALL REVEAL | SCALE: 12" = 1'-0" | **3**

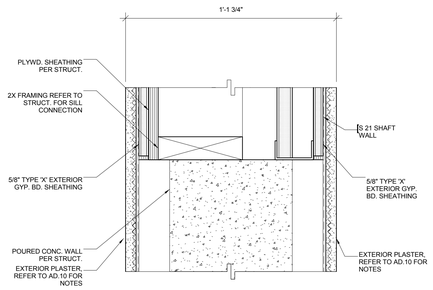

CONC. WALL TO FRAME CONSTRUCTION TRANS II | SCALE: 3" = 1'-0" | **6**

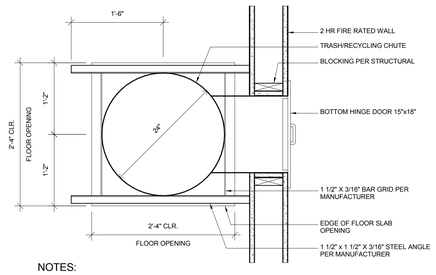

NOTES:

1. 24" DIAMETER, BOTTOM HINGE DOOR 15" x 18".
2. HATCH DOORS SHALL BE LABELED WITH A 1-1/2 HOUR MINIMUM RATING
3. PROVIDE SPRINKLERS AT TOP OF OF RUBBISH ROOMS AND IN TERMINAL ROOM
4. CHUTES EXTENDING THROUGH THREE OR MORE FLOORS SHALL HAVE ADDITIONAL SPRINKLER HEADS INSTALLED WITHIN SUCH CHUTES AT ALTERNATE FLOORS.

CHUTE DETAIL | SCALE: 1" = 1'-0" | **2**

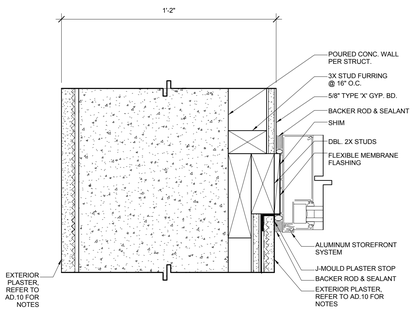

10" CONCRETE WALL FINISH @ ENTRY | SCALE: 3" = 1'-0" | **9**

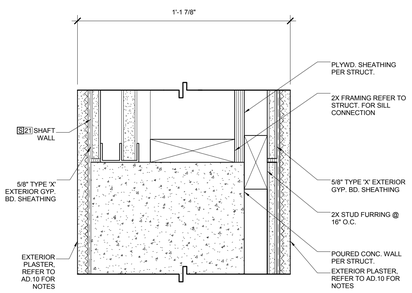

CONC. WALL TO FRAME CONSTRUCTION TRANS | SCALE: 3" = 1'-0" | **5**

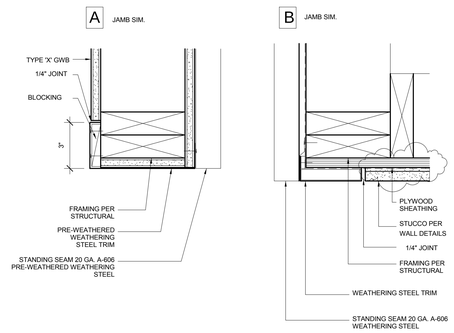

WEATHERING STEEL @ B.O. WALL OR SOFFIT | SCALE: 3" = 1'-0" | **1**

THE ABOVE DRAWINGS AND SPECIFICATIONS AND IDEAS, DESIGNS, ARRANGEMENTS AND REPRESENTATIONS THEREIN ARE AND SHALL REMAIN THE PROPERTY OF THE ARCHITECT AND NO PART THEREOF SHALL BE COPIED, DISCLOSED TO OTHERS OR USED IN CONNECTION WITH ANY OTHER WORK OR PROJECT OTHER THAN THE SPECIFIC PROJECT FOR WHICH THEY HAVE BEEN PREPARED AND DEVELOPED, WITHOUT THE WRITTEN CONSENT OF THE ARCHITECT. VISUAL CONTACT WITH THESE DRAWINGS OR SPECIFICATIONS SHALL CONSTITUTE CONCLUSIVE EVIDENCE OF ACCEPTANCE OF THESE RESTRICTIONS.

NO.	REVISIONS	DATE
01	PLAN CHECK REVISIONS	06/06/2016

LICENSED ARCHITECT
STEPHEN M. ALBERT
NO. C 9412
REN. 5-31-13
STATE OF CALIFORNIA

1833 N. GAREY AVE.

1833 NORTH GAREY AVENUE
PAMONA, CALIFORNIA 91767

ARCHITECTURAL DETAILS - REVEAL, FINISHES

the albert group architects
24932 Stoner Ave | Los Angeles, CA 90025 310.820.8505

C.U.P NUMBER:

PROJECT NUMBER: 14130

PROJECT STATUS: PLAN CHECK RESUBMITTAL

ISSUE DATE: 07/18/2016

SHEET NUMBER: **AD.81**

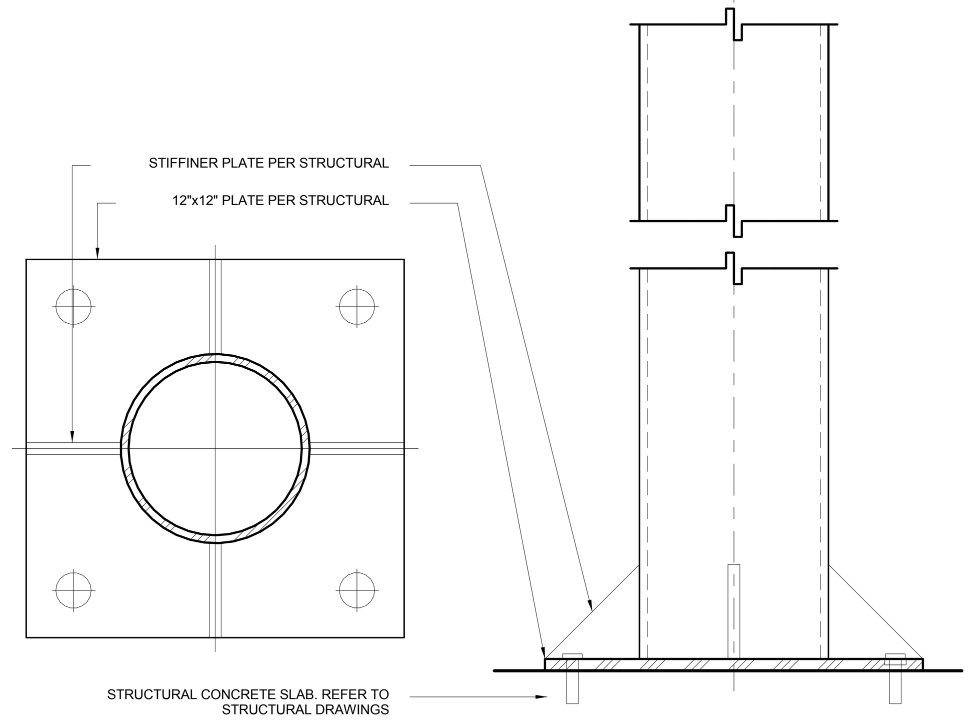

SURFACE MOUNTED BOLLARD
SCALE: 3" = 1'-0" | 10

NOTE 1:
ACCESSIBLE PARKING SPACE AND ACCESS ROUTE SHALL BE LEVEL WITH SURFACE SLOPES NOT EXCEEDING 2% IN ALL DIRECTIONS.
NOTE 2:
ACCESS AISLES SHALL NOT OVERLAP THE VEHICULAR WAY.
NOTE 3:
ACCESS AISLES SHALL BE PERMITTED TO BE PLACED ON EITHER SIDE OF THE PARKING SPACE EXCEPT FOR VAN PARKING SPACES WHICH SHALL HAVE ACCESS AISLES LOCATED ON THE PASSENGER SIDE OF THE PARKING SPACES. 11B-502.3.3

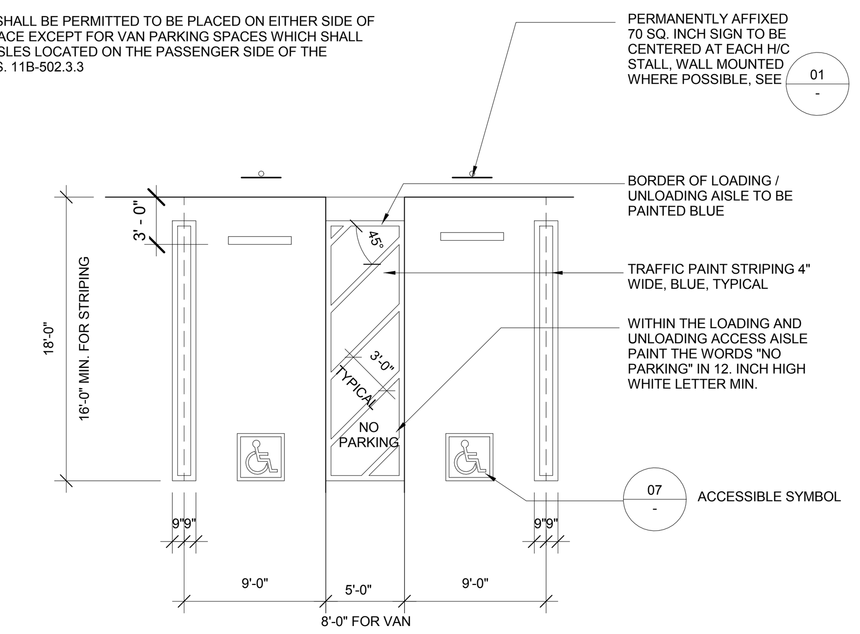

ADA STANDARD PARKING & MARKING, TYP.
SCALE: 1/8" = 1'-0" | 6

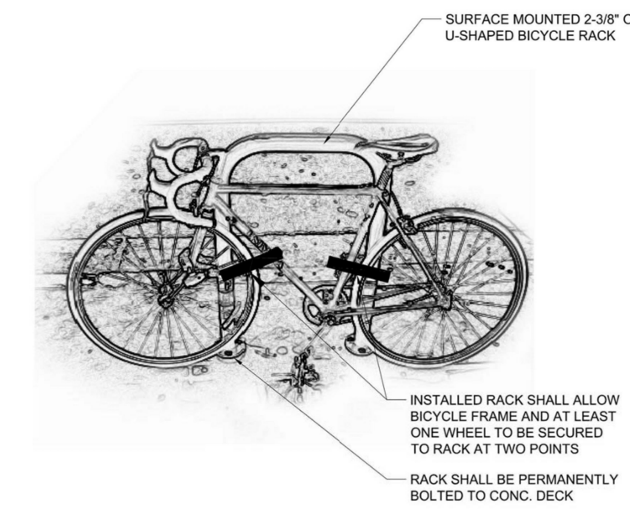

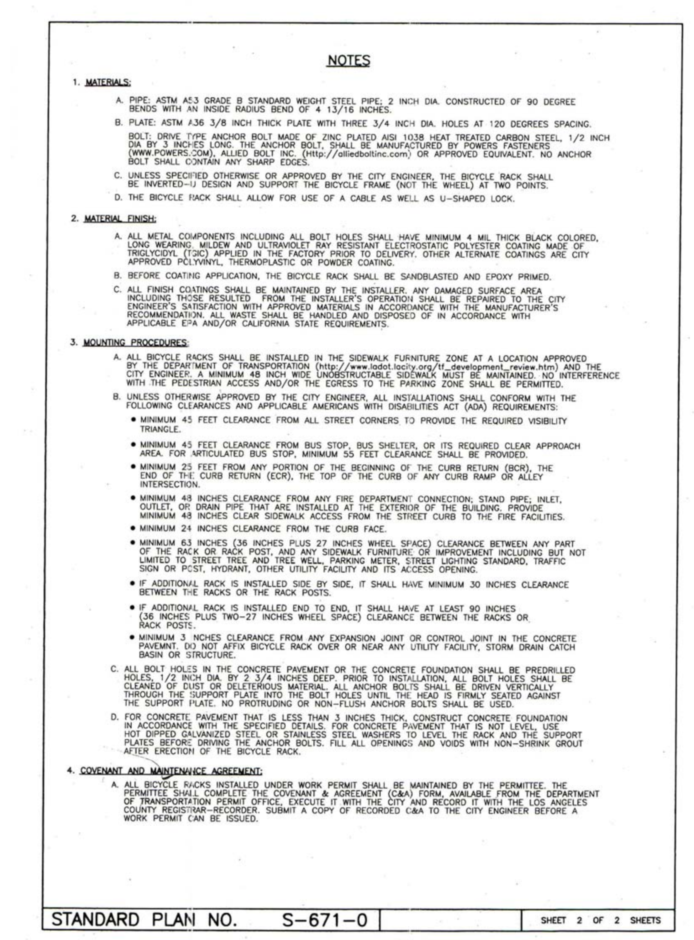
NOTES

1. MATERIALS:
A. PIPE: ASTM A53 GRADE B STANDARD WEIGHT STEEL PIPE; 2 INCH DIA. CONSTRUCTED OF 90 DEGREE BENDS WITH AN INSIDE RADIUS BEND OF 4 13/16 INCHES.
B. PLATE: ASTM A36 3/8 INCH THICK PLATE WITH THREE 3/4 INCH DIA. HOLES AT 120 DEGREES SPACING.
BOLT: DRIVE TYPE ANCHOR BOLT MADE OF ZINC PLATED AISI 1038 HEAT TREATED CARBON STEEL, 1/2 INCH DIA BY 3 INCHES LONG. THE ANCHOR BOLT, SHALL BE MANUFACTURED BY POWERS FASTENERS (WWW.POWERS.COM), ALLIED BOLT INC. (http://alliedboltinc.com) OR APPROVED EQUIVALENT. NO ANCHOR BOLT SHALL CONTAIN ANY SHARP EDGES.
C. UNLESS SPECIFIED OTHERWISE OR APPROVED BY THE CITY ENGINEER, THE BICYCLE RACK SHALL BE INVERTED-U DESIGN AND SUPPORT THE BICYCLE FRAME (NOT THE WHEEL) AT TWO POINTS.
D. THE BICYCLE RACK SHALL ALLOW FOR USE OF A CABLE AS WELL AS U-SHAPED LOCK.

2. MATERIAL FINISH:
A. ALL METAL COMPONENTS INCLUDING ALL BOLT HOLES SHALL HAVE MINIMUM 4 MIL THICK BLACK COLORED, LONG WEARING, MILDEW AND ULTRAVIOLET RAY RESISTANT ELECTROSTATIC POLYESTER COATING MADE OF TRIGLYCIDYL (TGIC) APPLIED IN THE FACTORY PRIOR TO DELIVERY. OTHER ALTERNATE COATINGS ARE CITY APPROVED POLYVINYL, THERMOPLASTIC OR POWDER COATING.
B. BEFORE COATING APPLICATION, THE BICYCLE RACK SHALL BE SANDBLASTED AND EPOXY PRIMED.
C. ALL FINISH COATINGS SHALL BE MAINTAINED BY THE INSTALLER. ANY DAMAGED SURFACE AREA INCLUDING THOSE RESULTED FROM THE INSTALLER'S OPERATION SHALL BE REPAIRED TO THE CITY ENGINEER'S SATISFACTION WITH APPROVED MATERIALS IN ACCORDANCE WITH THE MANUFACTURER'S RECOMMENDATION. ALL WASTE SHALL BE HANDLED AND DISPOSED OF IN ACCORDANCE WITH APPLICABLE EPA AND/OR CALIFORNIA STATE REQUIREMENTS.

3. MOUNTING PROCEDURES:
A. ALL BICYCLE RACKS SHALL BE INSTALLED IN THE SIDEWALK FURNITURE ZONE AT A LOCATION APPROVED BY THE DEPARTMENT OF TRANSPORTATION (http://www.ladot.lacity.org/tf_development_review.htm) AND THE CITY ENGINEER. A MINIMUM 48 INCH WIDE UNOBSTRUCTABLE SIDEWALK MUST BE MAINTAINED. NO INTERFERENCE WITH THE PEDESTRIAN ACCESS AND/OR THE EGRESS TO THE PARKING ZONE SHALL BE PERMITTED.
B. UNLESS OTHERWISE APPROVED BY THE CITY ENGINEER, ALL INSTALLATIONS SHALL CONFORM WITH THE FOLLOWING CLEARANCES AND APPLICABLE AMERICANS WITH DISABILITIES ACT (ADA) REQUIREMENTS:
- MINIMUM 45 FEET CLEARANCE FROM ALL STREET CORNERS TO PROVIDE THE REQUIRED VISIBILITY TRIANGLE.
- MINIMUM 45 FEET CLEARANCE FROM BUS STOP, BUS SHELTER, OR ITS REQUIRED CLEAR APPROACH AREA. FOR ARTICULATED BUS STOP, MINIMUM 55 FEET CLEARANCE SHALL BE PROVIDED.
- MINIMUM 25 FEET FROM ANY PORTION OF THE BEGINNING OF THE CURB RETURN (BCR), THE END OF THE CURB RETURN (ECR), THE TOP OF THE CURB OF ANY CURB RAMP OR ALLEY INTERSECTION.
- MINIMUM 48 INCHES CLEARANCE FROM ANY FIRE DEPARTMENT CONNECTION; STAND PIPE; INLET, OUTLET, OR DRAIN PIPE THAT ARE INSTALLED AT THE EXTERIOR OF THE BUILDING. PROVIDE MINIMUM 48 INCHES CLEAR SIDEWALK ACCESS FROM THE STREET CURB TO THE FIRE FACILITIES.
- MINIMUM 24 INCHES CLEARANCE FROM THE CURB FACE.
- MINIMUM 63 INCHES (36 INCHES PLUS 27 INCHES WHEEL SPACE) CLEARANCE BETWEEN ANY PART OF THE RACK OR RACK POST, AND ANY SIDEWALK FURNITURE OR IMPROVEMENT INCLUDING BUT NOT LIMITED TO STREET TREE AND TREE WELL, PARKING METER, STREET LIGHTING STANDARD, TRAFFIC SIGN OR POST, HYDRANT, OTHER UTILITY FACILITY AND ITS ACCESS OPENING.
- IF ADDITIONAL RACK IS INSTALLED SIDE BY SIDE, IT SHALL HAVE MINIMUM 30 INCHES CLEARANCE BETWEEN THE RACKS OR THE RACK POSTS.
- IF ADDITIONAL RACK IS INSTALLED END TO END, IT SHALL HAVE AT LEAST 90 INCHES (36 INCHES PLUS TWO-27 INCHES WHEEL SPACE) CLEARANCE BETWEEN THE RACKS OR RACK POSTS.
- MINIMUM 3 INCHES CLEARANCE FROM ANY EXPANSION JOINT OR CONTROL JOINT IN THE CONCRETE PAVEMNT. DO NOT AFFIX BICYCLE RACK OVER OR NEAR ANY UTILITY FACILITY, STORM DRAIN CATCH BASIN OR STRUCTURE.

C. ALL BOLT HOLES IN THE CONCRETE PAVEMENT OR THE CONCRETE FOUNDATION SHALL BE PREDRILLED HOLES, 1/2 INCH DIA. BY 2 3/4 INCHES DEEP. PRIOR TO INSTALLATION, ALL BOLT HOLES SHALL BE CLEANED OF DUST OR DELETERIOUS MATERIAL. ALL ANCHOR BOLTS SHALL BE DRIVEN VERTICALLY THROUGH THE SUPPORT PLATE INTO THE BOLT HOLES UNTIL THE HEAD IS FIRMLY SEATED AGAINST THE SUPPORT PLATE. NO PROTRUDING OR NON-FLUSH ANCHOR BOLTS SHALL BE USED.
D. FOR CONCRETE PAVEMENT THAT IS LESS THAN 3 INCHES THICK, CONSTRUCT CONCRETE FOUNDATION IN ACCORDANCE WITH THE SPECIFIED DETAILS. FOR CONCRETE PAVEMENT THAT IS NOT LEVEL, USE HOT DIPPED GALVANIZED STEEL OR STAINLESS STEEL WASHERS TO LEVEL THE RACK AND THE SUPPORT PLATES BEFORE DRIVING THE ANCHOR BOLTS. FILL ALL OPENINGS AND VOIDS WITH NON-SHRINK GROUT AFTER ERECTION OF THE BICYCLE RACK.

4. COVENANT AND MAINTENANCE AGREEMENT:
A. ALL BICYCLE RACKS INSTALLED UNDER WORK PERMIT SHALL BE MAINTAINED BY THE PERMITTEE. THE PERMITTEE SHALL COMPLETE THE COVENANT & AGREEMENT (C&A) FORM, AVAILABLE FROM THE DEPARTMENT OF TRANSPORTATION PERMIT OFFICE, EXECUTE IT WITH THE CITY AND RECORD IT WITH THE LOS ANGELES COUNTY REGISTRAR-RECORDER. SUBMIT A COPY OF RECORDED C&A TO THE CITY ENGINEER BEFORE A WORK PERMIT CAN BE ISSUED.

STANDARD PLAN NO. S-671-0 | SHEET 2 OF 2 SHEETS

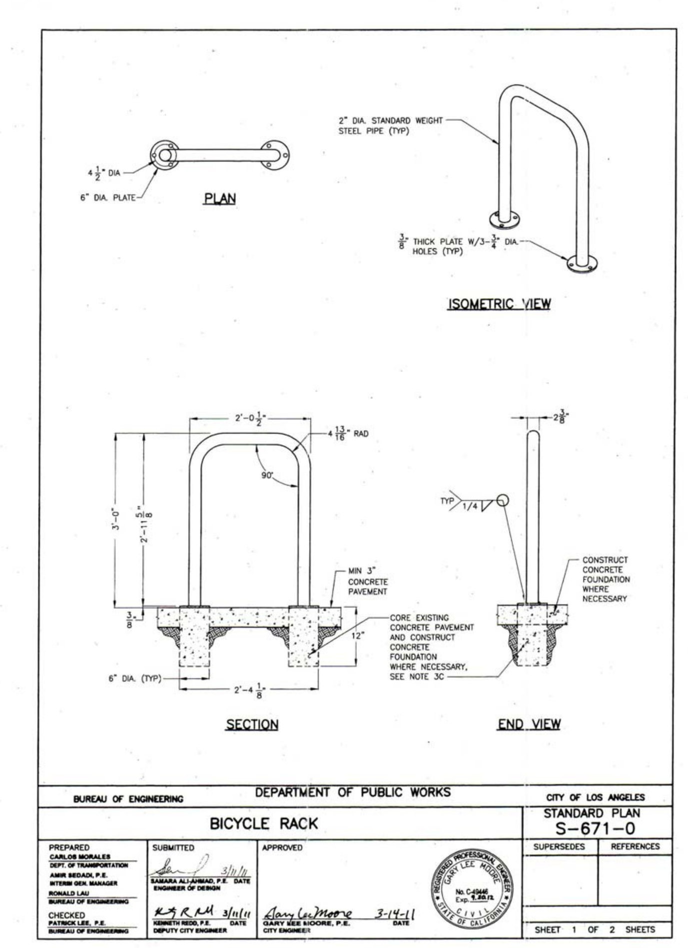

SHORT TERM BICYCLE PARKING RACK
SCALE: 3/32" = 1'-0" | 3

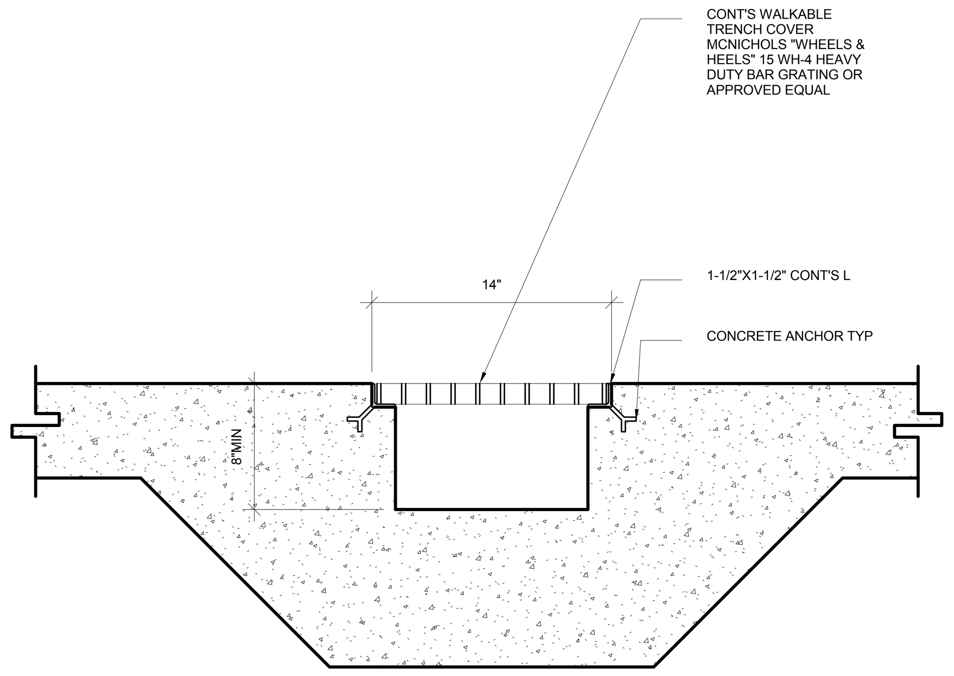

TRENCH DRAIN @ BASEMENT PARKING RAMP
SCALE: 1 1/2" = 1'-0" | 9

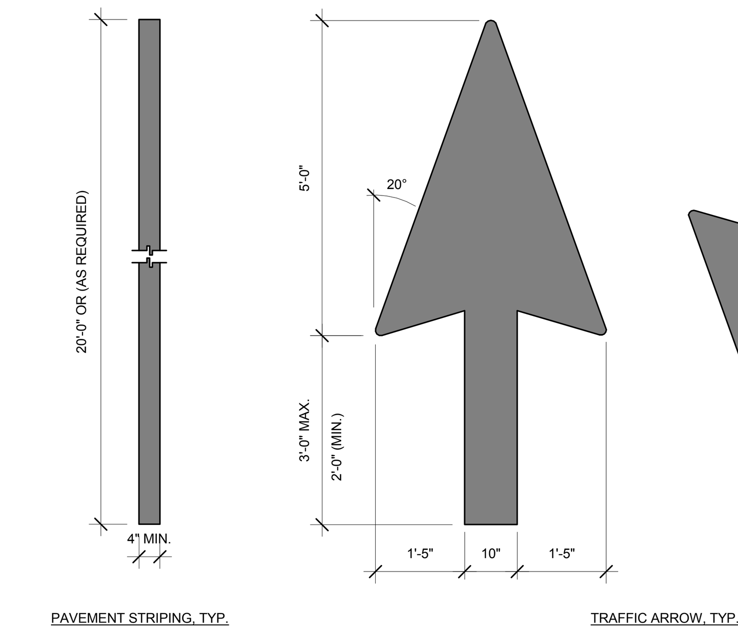

NOTE:
1. USE NON-REFLECTIVE YELLOW PAINT.

PAVEMENT MARKING
SCALE: 1/2" = 1'-0" | 5

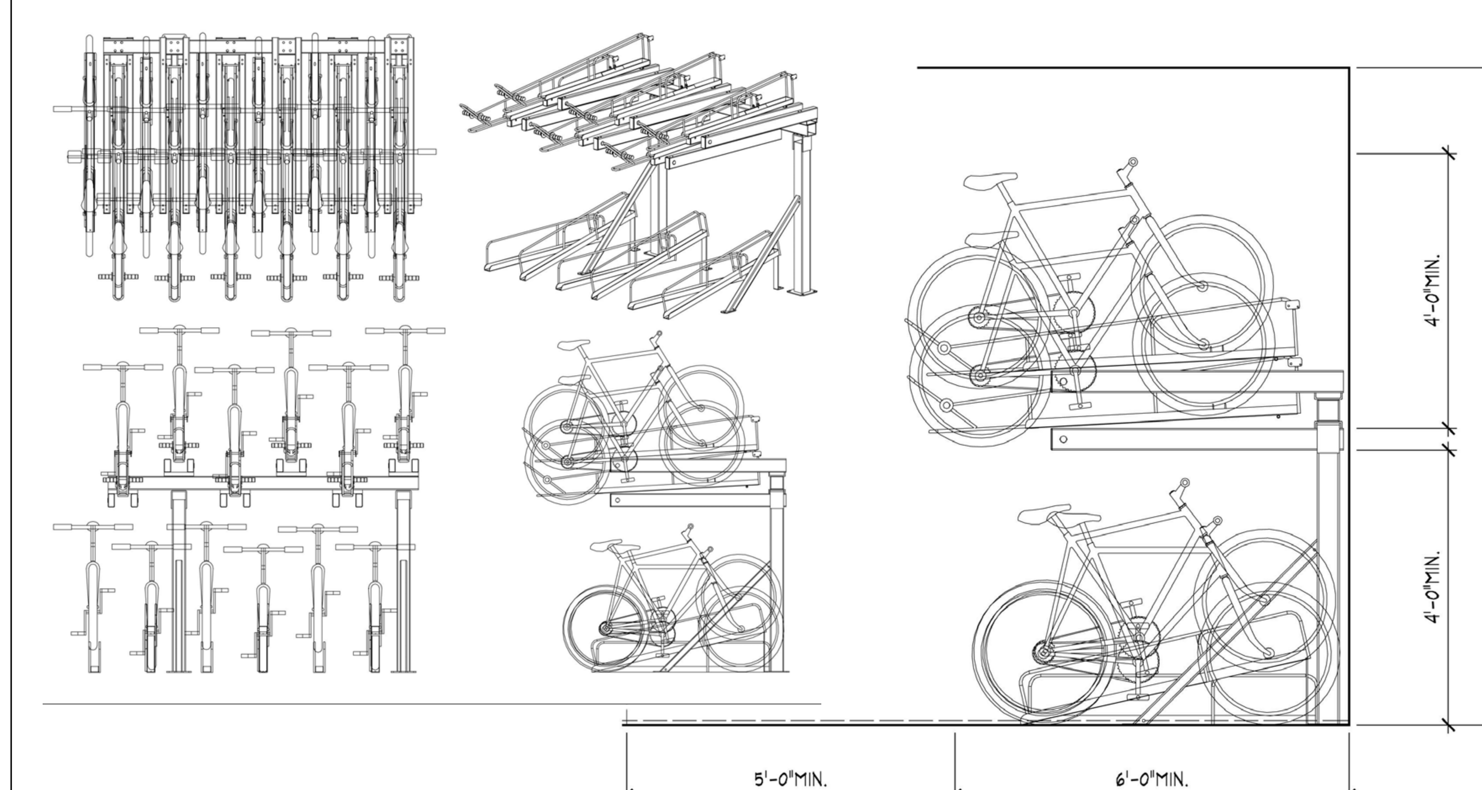

LONG TERM BICYCLE PARKING RACK
SCALE: 1/16" = 1'-0" | 2

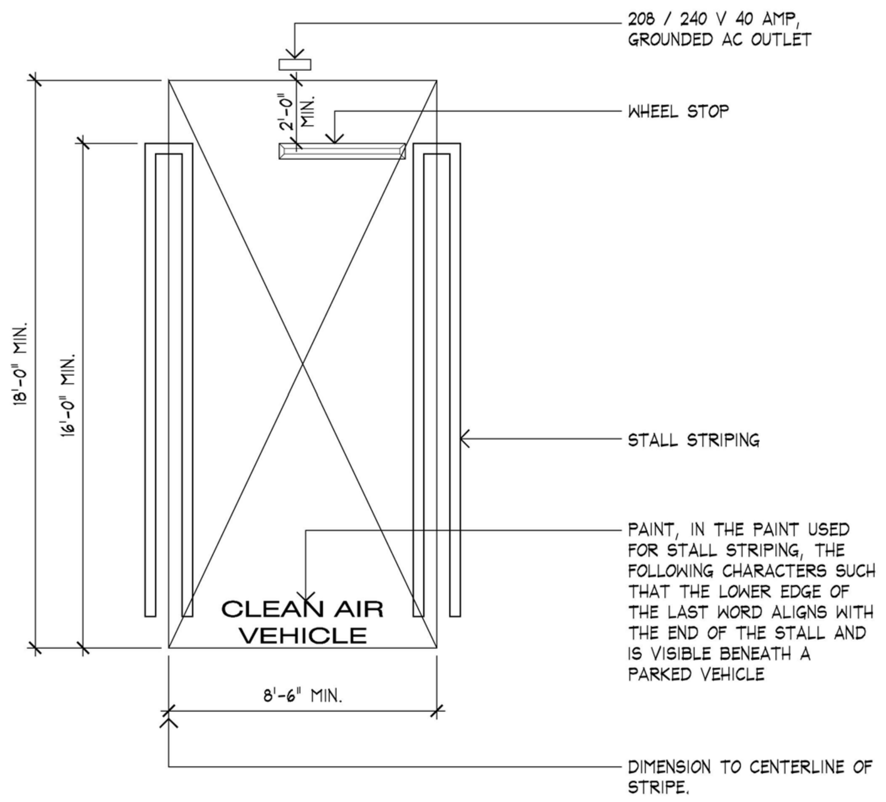

SINGLE CLEAN AIR PARKING STALL
SCALE: 1/4" = 1'-0" | 12

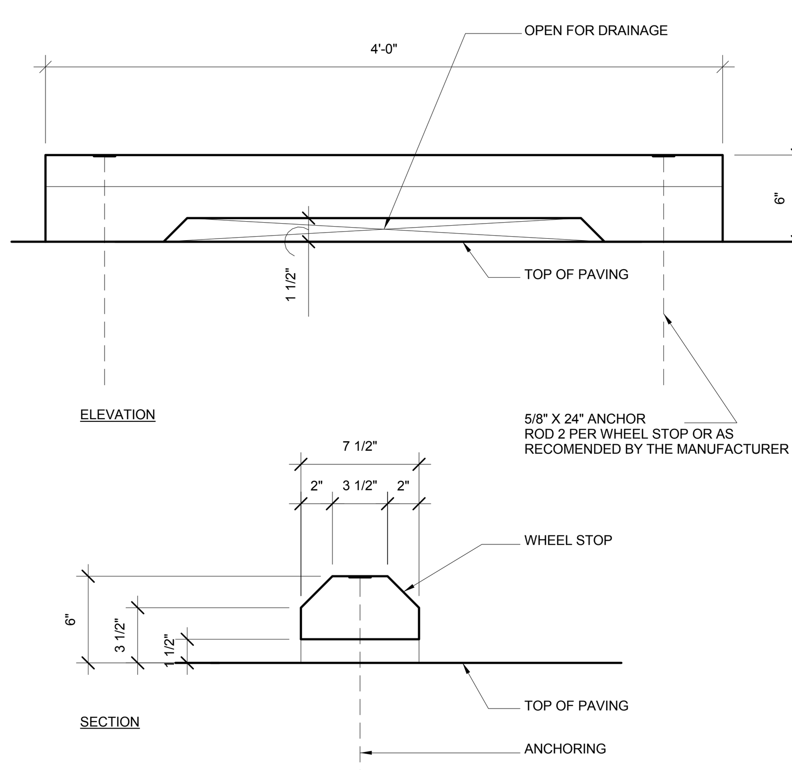

WHEEL STOP
SCALE: 1 1/2" = 1'-0" | 8

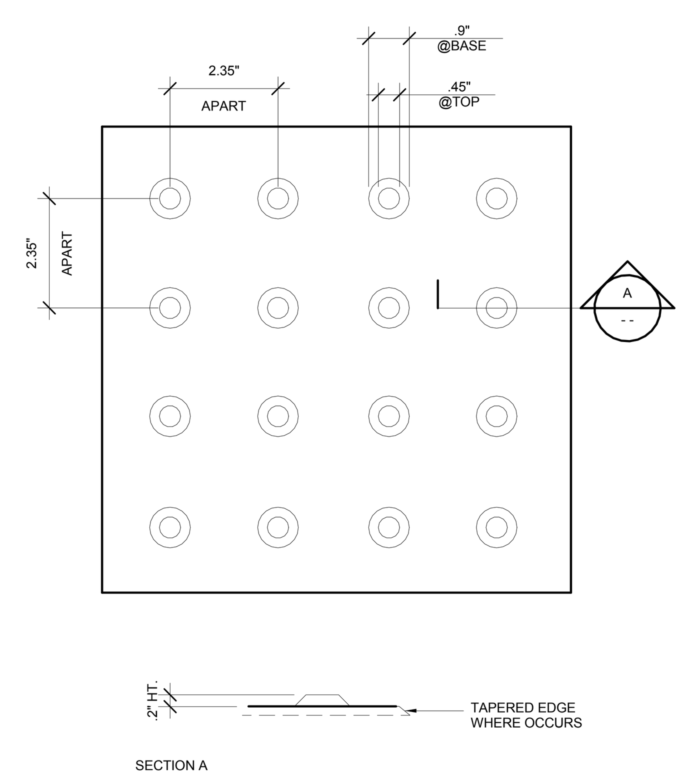

DETECTABLE WARNING
SCALE: 6" = 1'-0" | 4

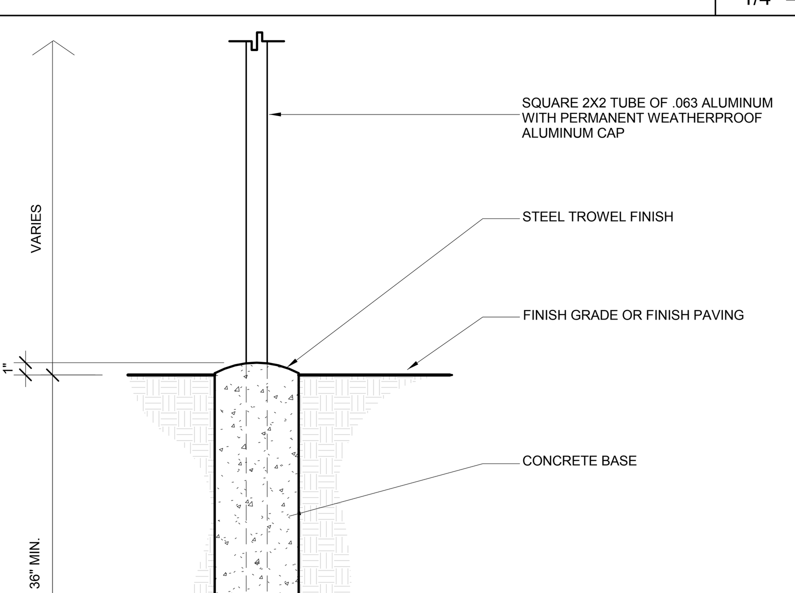

SIGN MOUNTING NOTE: FOR POST MOUNTING, USE NON-CORROSIVE 3/8" MACHINE BOLTS W/WASHERS, 2 PER SIGN. FOR WALL MOUNTING, USE NON-CORROSIVE 3/8" LAG BOLTS W/LEAD EXPANSION SHIELD, 4 PER SIGN.

NOTE: BOTTOM OF FOOTING TO BE 1'-0" BELOW EXISTING UNDISTURBED GRADE OR FINISHED GRADE, WHICHEVER IS GREATER.

SIGNAGE POST FOOTING
SCALE: 1" = 1'-0" | 11

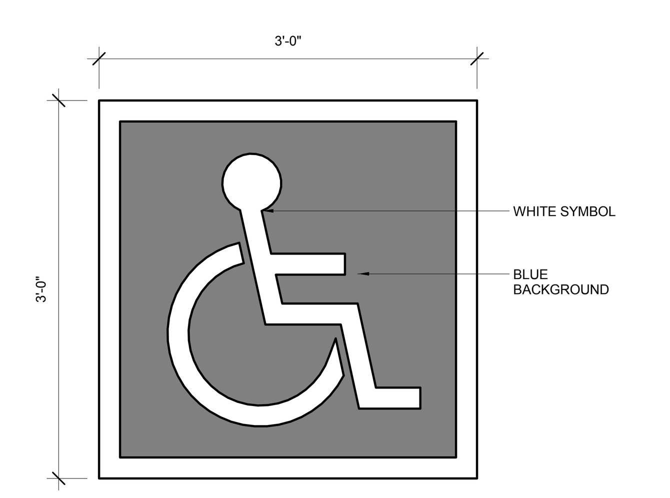

ACCESSIBILITY LOGO OCCURS AT EACH. DISABLED PARKING STALL. SEE PLAN FOR LOCATIONS AND AT ACCESSIBLE ENTRANCES STRIPING FOR DISABLED STALL TO BE BLUE.

SYMBOL OF ACCESSIBILITY
SCALE: 1" = 1'-0" | 7

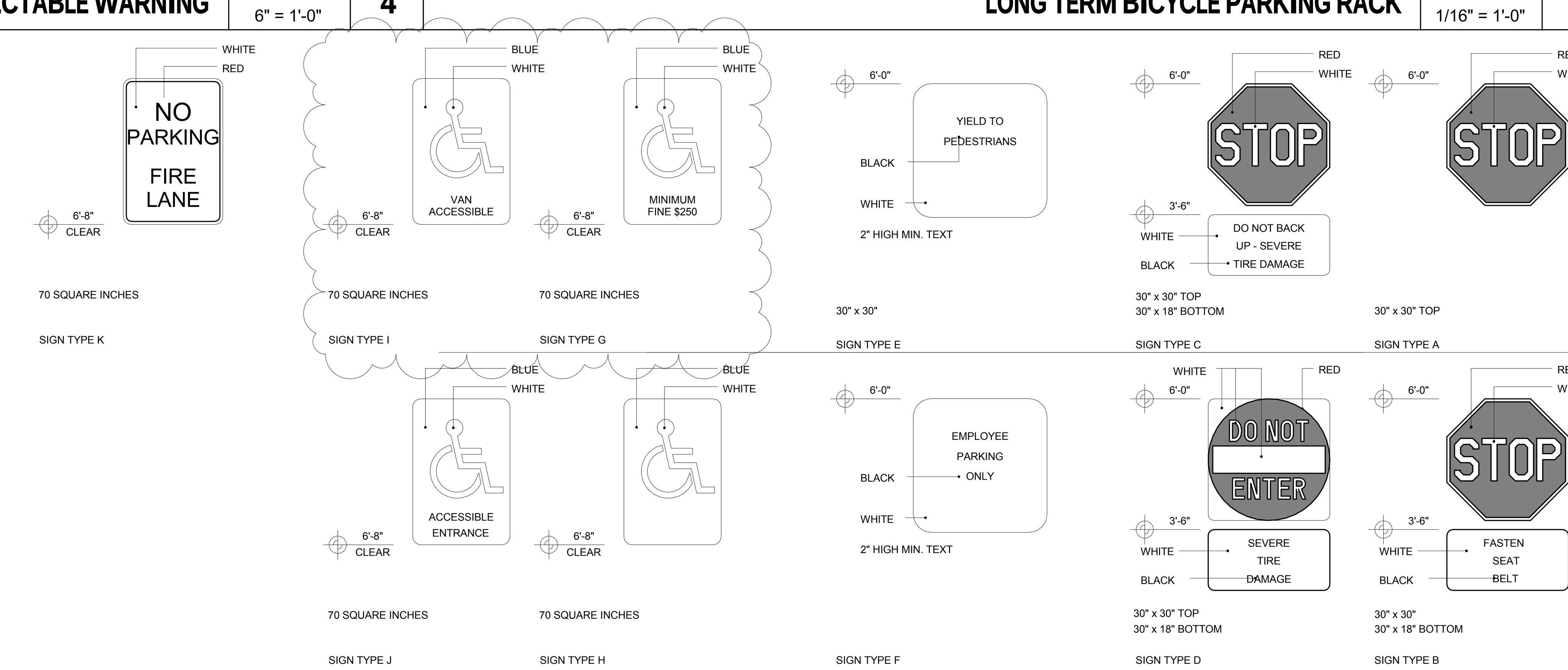

TRAFFIC SIGNAGE
SCALE: 12" = 1'-0" | 1

THE ABOVE DRAWINGS AND SPECIFICATIONS AND IDEAS, DESIGNS AND ARRANGEMENTS REPRESENTED THEREBY ARE AND SHALL REMAIN THE PROPERTY OF THE ARCHITECT AND NO PART THEREOF SHAL BE COPIED DISCLOSED TO OTHERS OR USED IN CONNECTION WITH ANY OTHER WORK OR PROJECT OTHER THAN THE SPECIFIC PROJECT FOR WHICH THEY HAVE BEEN PREPARED AND DEVELOPED, WITHOUT THE WRITTEN CONSENT OF THE ARCHITECT. VISUAL CONTACT WITH THESE DRAWINGS OR SPECIFICATIONS SHALL CONSTITUTE CONCLUSIVE EVIDENCE OF ACCEPTANCE OF THESE RESTRICTIONS.

NO.	REVISIONS	DATE
01	PLAN CHECK REVISIONS	06/06/2016

LICENSED ARCHITECT
STEPHEN M. ALBERT
NO. C 9412
REN. 5-31-13
STATE OF CALIFORNIA

8' - 0" MIN. OVERALL CLEAR HEIGHT

1833 N. GAREY AVE.

1833 NORTH GAREY AVENUE
PAMONA, CALIFORNIA 91767

ARCHITECTURAL DETAILS - SITE

the albert group architects
2032 Stoner Ave | Los Angeles, CA 90025 310.820.8863

C.U.P NUMBER:

PROJECT NUMBER:
14130

PROJECT STATUS:
PLAN CHECK RESUBMITTAL

ISSUE DATE:
07/18/2016

SHEET NUMBER:
AD.90